BEFORE THE NEW MEXICO PUBLIC REGULATION COMMISSION

APPLICATION FOR APPROVAL OF EL PASO ELECTRIC COMPANY'S RENEWABLE ENERGY ACT PLAN FOR 2026, AND NINTH REVISED RATE NO. 38– RPS COST RIDER	)	**CASE NO. 25-_____-UT**
EL PASO ELECTRIC COMPANY, Applicant.	)	

EL PASO ELECTRIC COMPANY'S APPLICATION FOR APPROVAL OF ITS RENEWABLE ENERGY ACT PLAN FOR 2026 AND NINTH REVISED RATE NO. 38 - RPS COST RIDER

El Paso Electric Company ("EPE" or "Company") hereby files this Application for approvals related to its Renewable Energy Act Plan for Plan Year 2026 (“Plan” or “Plan for 2026”) (“Plan Application”). This Plan Application presents EPE’s plan for compliance with the New Mexico Renewable Energy Act, NMSA 1978, Sections 62-16-1 to -10 (2004, as amended through 2021) (“REA” or “Act”), and the New Mexico Public Regulation Commission's (“NMPRC” or “Commission”) Rule 17.9.572 of the New Mexico Administrative Code (“NMAC”) (“Rule 572” or “Rule”).

EPE’s Plan provides the information and data required under the REA and Rule 572 for the Plan Year (2026) and Next Plan Year (2027) and presents EPE’s Plan to comply with the 40 percent renewable portfolio standard in Plan Year 2026 and Next Plan Year 2027, for informational purposes. EPE’s Plan to meet 40 percent RPS in 2026 relies on projected amounts of energy and associated renewable energy certificates (“RECs”) from its approved renewable energy portfolio and EPE’s new REA procurement proposal presented for approval in this Plan Application.

EPE's Plan Application also proposes a revised RPS Cost Rider to reflect the expected RPS procurement costs for the 2026 Plan Year, adjusted for the 2024 reconciliation of RPS costs and rider revenues. EPE's Plan Application is supported by the testimonies of EPE witnesses James Schichtl, Emannuel Villalobos, Wayne Oliver, and Rene F. Gonzalez.

EPE requests approval of its Plan and specifically requests the following authorizations in this Application:

- approval to purchase and assign 100 percent of the renewable energy generated from the Santa Teresa Project in 2026, which is needed to meet the 40 percent RPS requirement in 2026, and to purchase and include 50 MW of the battery energy storage component of the project in EPE's RPS Portfolio; authorization for the flexibility to modify allocation of energy from the Santa Teresa Facility as needed to meet the RPS;
- authorization to recover Commission-approved 2026 Plan procurement costs through the RPS Cost Rider;
- approval of reconciled RPS rider costs and rider revenue collections for calendar year 2024;
- approval to revise RPS Cost Rider Rate No. 38 monthly rate from $0.015742 per kilowatt-hour ("kWh") to $0.020215 per kWh, to recover approved 2026 Plan Year costs adjusted for the 2024 reconciliation;

In addition, to the extent such approval may be required, EPE requests:

- approval of a variance from the data filing requirements of 17.9.530 NMAC; and such other approvals, authorizations and actions required under the REA, Rule 572, and Commission rules and orders to implement the Plan and revisions to the RPS Cost Rider.

The Plan and the revised RPS Cost Rider satisfies all requirements of the REA and Rule 572. In further support of this Application, EPE states as follows:

I. DESCRIPTION OF EPE

1. EPE is certified and authorized to conduct the business of providing public utility service within the State of New Mexico and is a public utility subject to the jurisdiction of the NMPRC under the New Mexico Public Utility Act ("PUA"). EPE is a wholly owned subsidiary of Sun Jupiter Holding LLC.

2. EPE generates, transmits, and distributes electricity through an interconnected system to customers in southern New Mexico and Texas. EPE owns, operates, leases, or controls the plant, property, and facilities used by it for the generation, transmission, distribution, sale, or furnishing of electricity to or for the public within both states.

3. EPE has obtained certificates of public convenience and necessity required for the ownership, operation, leasing, or controlling of such plant, property, and facilities.

4. EPE's principal business address and telephone number for its New Mexico service area are:

El Paso Electric Company
100 N. Stanton Street
El Paso, Texas 79901
(915) 543-5711.

II. REA FILING REQUIREMENTS

5. The REA has three purposes:

- prescribe the amounts of renewable energy resources that public utilities shall include in their electric energy supply portfolios for sales to retail customers in New Mexico by prescribed dates;

- allow public utilities to recover costs through the rate-making process incurred for procuring or generating renewable energy used to comply with the prescribed amounts; and

- protect the public utilities and their ratepayers from renewable energy costs that are above a reasonable cost threshold.

NMSA 1978, § 62-16-2(B).

6. The REA provides an incremental RPS, identified in Section 62-16-4, to guide utilities in making "reasonable and consistent progress" over time toward having "zero carbon resources [ ] supply one hundred percent of all retail sales of electricity to New Mexico" by 2045, subject to certain limitations. Section 62-16-4(6). Specifically, the RPS increases from no less than twenty percent by January 1, 2020, to forty percent by 2025, fifty percent by 2030, eighty percent by 2040, and requires 100 percent zero carbon resources by 2045.

7. Under the REA and Rule 572, EPE is required to file an annual REA Plan providing the data and information listed in Section 62-16-4(G) and Rule 572.14(C).

8. EPE's most recent REA plan cases were NMPRC Docket Nos. 19-00099-UT, 21-00111-UT, 22-00093-UT, 23-00086-UT, and 24-00176-UT. The Commission has also established standards for annual REA plan filings in these previous EPE plan cases.

III. EPE's PLAN

A. 2024 Report

9. Pursuant to REA and Rule 572, EPE concurrently filed its 2024 RPS Report on May 1, 2025 with the Commission's Records Management Bureau. The 2024 RPS Report includes the data and information responsive to NMSA Section 62-16-4(G)(2) and (4) and additional the year end narrative (as of 12/31/2024) for the Carne Project, required by Commission final order in Docket No. 22-00093-UT.

10. A true and correct copy of the 2024 RPS Report is provided with this Application as Exhibit JS-2 to the Direct Testimony of James Schichtl.

B. Plan for 2026

11. EPE's Plan includes Plan Year (2026) data for approval and Next Plan Year (2027) data for informational purposes consistent REA and Rule 572 requirements.

12. EPE's Plan for 2026 relies on renewable energy and RECs from EPE's approved renewable energy portfolio and the proposed Santa Teresa procurement proposal. The Santa Teresa Project is a new 150 MW solar and 150 MW battery facility that will be constructed in Santa Teresa, NM at the former Hecate Project site.

13. EPE's Application includes testimony and exhibits demonstrating that the Santa Teresa Project, selected as a combined resource sourced from the publicly issued, widely distributed requests for proposals issued in New Mexico and Texas, presented the lowest net present value of cost while still meeting the projected energy needs in EPE's New Mexico jurisdiction. The testimony and exhibits also demonstrate that selecting a combined resource to fit the needs of both jurisdictions serves the public interest by allowing EPE to capture economies of scale, minimize curtailment, and optimize delivery through existing transmission infrastructure.

14. EPE's Plan EPE's Application seeks approval to purchase and assign 100 percent of the renewable energy generated from the Santa Teresa Project in 2026, which is needed to meet the 40 percent RPS requirement in 2026, and to purchase and include 50 MW of the battery energy storage component of the project in EPE's RPS Portfolio. EPE is also seeking authorization for the flexibility to modify allocation of energy from the Santa Teresa Project as needed to meet the RPS.

15. The projected cost for the combined solar energy and storage from the proposed Santa Teresa project assigned to New Mexico for 2026 is $45.67/MWh which is below the inflation adjusted renewable cost threshold amount of $74.14.

C. Rate Rider

16. EPE's Plan Application proposes revisions to the RPS Cost Rider to reflect the expected RPS procurement costs for the 2026 Plan Year, adjusted for the 2024 reconciliation of RPS costs and rider revenues for the 2024 calendar year.

17. EPE filed Advice Notice No. 309 with an 9th Revised Rate No. 38 – Renewable Portfolio Standard Cost Rider concurrently with this Application.

D. Testimony and Exhibits

18. EPE's Plan is detailed in the Direct Testimonies and Exhibits of James Schichtl, Emmanuel Villalobos, Wayne Oliver, and Rene F. Gonzalez.

A. James Schichtl introduces EPE's witnesses, summarizes EPE's Plan and request for approvals, including EPE's new REA procurement proposal, and supports the decisions to allocate 100 percent of the renewable energy generated by the new procurement in 2026 to New Mexico to meet EPE's 40 percent RPS requirements and to include 50 MWs of the energy storage component of that project into EPE's renewable energy portfolio. Mr. Schichtl also addresses changes to resources in EPE's approved renewable energy portfolio since EPE's last Plan filing, including treatment of liquidated damages related to default of the planned Hecate Project, and other legal and regulatory requirements applicable to EPE's Plan Application and request for approvals, including the Commission's questions regarding how recent increases in the allocation of renewable energy impact fuel costs for New Mexico customers. Mr. Schichtl also supports EPE's request for variance from data filing requirements of 17.9.530 NMAC.

B. Emmanuel Villalobos presents and supports EPE's 2026 Plan Year data and information for approval, and he presents EPE's 2027 Next Plan Year data for informational purposes. For both plan years, Mr. Villalobos presents renewable portfolio standard ("RPS") calculations, forecasted generation, and RPS procurement costs for the renewable energy portfolio supplying renewable energy to New Mexico customers in 2026 and 2027. Mr. Villalobos also discusses the competitive procurement process that led to the selection of the Santa Teresa Facility.

C. Wayne Oliver served as the independent evaluator for EPE's 2023 Request for Proposals for Renewable energy for New Mexico. Mr. Oliver's direct testimony summarizes his final report regarding the conduct and results of the 2023 RFP.

D. Rene F. Gonzalez presents and supports EPE's proposed RPS Cost Rider for recovery of EPE's RPS procurement costs in 2026 adjusted for the reconciliation of RPS rider costs and rider revenue collections for calendar year 2024, and the estimated RPS Cost Rider for Next Plan Year (2027) for informational purposes.

IV. SERVICE AND NOTICE

19. Service of all notices, pleadings and other documents related to this Application should be made as follows:

Linda Pleasant
Regulatory Case Manager
El Paso Electric Company
100 N. Stanton Street
El Paso, Texas 79901-1442
PO Box 982
El Paso, Texas 79960-0982
(915) 543-5841

Jeffrey J. Wechsler
Kari E. Olson
Angela E. Harris
Spencer Fane LLP
Post Office Box 2307
Santa Fe, New Mexico 87504-2307
(505) 982-3873

In addition to service on the above, EPE requests electronic service of all pleadings and documents as follows:

EPE_Reg_Mgmt@epelectric.com
nancy.burns@epelectric.com
linda.pleasant@epelectric.com

jwechsler@spencerfane.com
kaolson@spencerfane.com;
aharris@spencerfane.com;
ysandoval@spencerfane.com;
tpacheco@spencerfane.com

20. A Proposed Form of Notice to Customers is provided as Attachment A.

WHEREFORE, EPE respectfully requests a Commission Order approving the relief requested in this Application and Plan in accordance with the REA and Rule 572 and granting such other approvals, authorizations and actions required under the REA, Rule 572, and Commission rules and orders to implement the Plan and rate proposals.

Respectfully submitted,

Nancy B. Burns
Deputy General Counsel
New Mexico Bar No. 7538
El Paso Electric Company
300 Galisteo Street, Suite 206
Santa Fe, New Mexico 87501
Telephone (505) 982-7391
nancy.burns@epelectric.com

SPENCER FANE LLP

By: */s/Kari E. Olson*
Jeffrey J. Wechsler
Kari E. Olson
Angela E. Harris

Post Office Box 2307
Santa Fe, New Mexico 87504-2307
(505) 982-3873
jwechsler@spencerfane.com
kaolson@spencerfane.com
aharris@spencerfane.com

Attorneys for El Paso Electric Company

NOTICE TO EPE CUSTOMERS OF PROCEEDING AND HEARING

This document provides **NOTICE** that El Paso Electric Company's ("EPE" or the "Company") filed its annual renewable energy application with the New Mexico Public Regulation Commission on May 1, 2025, requesting approve of EPE's Renewable Energy Act Plan for 2026, and Ninth Revised Rate No. 38 – RPS Cost Rider ("Plan") ("Plan Application").

The New Mexico Renewable Energy Act (NMSA 1978, § 62-16-4(G) ("REA") and the Commission's Renewable Energy Rule (17.9.572 NMAC) ("Rule 572" or "Rule") require EPE to file a Plan Application on May 1 each year presenting EPE's Plan to comply with the renewable portfolio standard ("RPS") for the upcoming Plan Year and to provide information and data required under the REA and Rule 572. EPE's Plan Application asks the Commission to approve its Plan to meet 40 percent RPS in 2026 using projected amounts of energy and associated renewable energy certificates ("RECs") from EPE's approved renewable energy portfolio and EPE's new REA procurement proposal and to allow EPE to recover Plan Year costs through a revised EPE's RPS Cost Rider Rate No. 38 monthly rate.

This notice:

- Describes the Commission's process for considering EPE's application, and
- Describes how you can participate in this process (if you wish to do so).

Any person who is not a party to the case or affiliated with a party may make written comment. Oral comments may be allowed at the public hearing if a public hearing is conducted. Commenters are not parties and comments are not "evidence."

Any person who desires more information may contact the Commission at (505) 827-4084 or 1-888-427-5772 or by email at ryan.jimenez@prc.nm.gov for confirmation of the hearing date, time and place since hearings are occasionally rescheduled or canceled if deemed not required.

NO ACTION IS REQUIRED ON YOUR PART UNLESS YOU WANT TO PARTICIPATE IN THIS PROCESS OR COMMENT ON THE PROCEEDING

EPE's May 1, 2025 Plan Application requests the following Commission approvals:

- approval to purchase and assign 100 percent of the renewable energy generated from the Santa Teresa Project in 2026, which is needed to meet the 40 percent RPS requirement in 2026 and to purchase, and include 50 MW of the battery energy storage component of the project in EPE's RPS Portfolio;

- authorization for the flexibility to modify allocation of energy from the Santa Teresa Facility as needed to meet the RPS;

- authorization to recover Commission-approved 2026 Plan procurement costs through the RPS Cost Rider;

- approval of reconciled RPS rider costs and rider revenue collections for calendar year 2024;

- approval to revise RPS Cost Rider Rate No. 38 monthly rate from $0.015742 per kilowatt-hour ("kWh") to $0.020215 per kWh, to recover approved 2026 Plan Year costs adjusted for the 2024 reconciliation. This new rate is for all applicable retail customers served by EPE and represents an increase of 28.4 percent from the current RPS Cost Rider of $0.015742 (All applicable Retail Rate Schedules).

In addition, to the extent such approval may be required, EPE requests:

- approval of a variance from the data filing requirements of 17.9.530 NMAC; and such other approvals, authorizations and actions required under the REA, Rule 572, and Commission rules and orders to implement the Plan and revisions to the RPS Cost Rider.

The following Table shows typical bill impacts resulting from the increase in the RPS Rider for the Residential rate class. These impacts are subject to change by the Commission based upon its findings in this case.

	Residential Typical Bill Comparison by kWh Level (Summer)								
	Current Base & Fuel Rates			Proposed Base & Fuel Rates			Percent Impact		
kWh	Base Plus Fuel	RPS Rider	Total	Base Plus Fuel	RPS Rider	Total	Base Plus Fuel	RPS Rider	Total
0	$ 7.00	$ -	$ 7.00	$ 7.00	$ -	$ 7.00	0%	0%	0%
100	$ 14.23	$ 1.57	$ 15.80	$ 14.23	$ 2.02	$ 16.25	0%	28.7%	2.8%
250	$ 25.07	$ 3.94	$ 29.01	$ 25.07	$ 5.05	$ 30.12	0%	28.2%	3.8%
500	$ 43.14	$ 7.87	$ 51.01	$ 43.14	$ 10.11	$ 53.25	0%	28.5%	4.4%
750	$ 66.95	$ 11.81	$ 78.76	$ 66.95	$ 15.16	$ 82.11	0%	28.4%	4.3%
1000	$ 94.62	$ 15.74	$ 110.36	$ 94.62	$ 20.22	$ 114.84	0%	28.5%	4.1%
2000	$ 205.29	$ 31.48	$ 236.77	$ 205.29	$ 40.43	$ 245.72	0%	28.4%	3.8%

	Residential Typical Bill Comparison by kWh Level (Winter)								
	Current Base & Fuel Rates			Proposed Base & Fuel Rates			Percent Impact		
kWh	Base Plus Fuel	RPS Rider	Total	Base Plus Fuel	RPS Rider	Total	Base Plus Fuel	RPS Rider	Total
0	$ 7.00	$ -	$ 7.00	$ 7.00	$ -	$ 7.00	0%	0%	0%
100	$ 13.01	$ 1.57	$ 14.58	$ 13.01	$ 2.02	$ 15.03	0%	28.3%	3.1%
250	$ 22.02	$ 3.94	$ 25.96	$ 22.02	$ 5.05	$ 27.07	0%	28.3%	4.3%
500	$ 37.04	$ 7.87	$ 44.91	$ 37.04	$ 10.11	$ 47.15	0%	28.4%	5.0%
750	$ 52.05	$ 11.81	$ 63.86	$ 52.05	$ 15.16	$ 67.21	0%	28.4%	5.3%
1000	$ 67.07	$ 15.74	$ 82.81	$ 67.07	$ 20.22	$ 87.29	0%	28.4%	5.4%
2000	$ 127.14	$ 31.48	$ 158.62	$ 127.14	$ 40.43	$ 167.57	0%	28.4%	5.6%

Some of the procedural dates for this case are identified below. Individuals interested in these proceedings should review the procedural order issued in this case in its entirety to obtain a full understanding of the procedures that will govern. **The procedural order is found online at *https://www.prc.nm.gov/case-lookup-e-docket/*.** The procedural dates and requirements set out below may be changed.

This case has been docketed as Case No. 25-_____-UT, and any inquiries should reference this case number.

EPE's Application and the pre-filed testimonies and exhibits may be vied on EPE's website at https://www.epelectric.com/company/public-notices. It is also available at the commission's website in the E-Docketing system.

Statute and Commission rules provide that the Commission may approve the application without a formal hearing.

Any person desiring to become a party to this case must file a Motion to Intervene pursuant to 1.2.2.23(A) and 1.2.2.23(B) NMAC on or before _____, 2025.

The Commission's Utility Division Staff shall, and any intervenor may, file direct testimony on or before _____, 2025. Any rebuttal testimony shall be filed on or before _____, 2025.

A public hearing will be held beginning at ____ a.m. MDT on _____, 2025, and continue, if necessary, through _____, 2025. Such hearing may be vacated if deemed not required pursuant to NMSA 1978, Section 62-16-4(H), in which case the Commission will take public comment and dispose of the Application at an Open Meeting. The hearing, if required, will be conducted either in person or via the Zoom videoconference platform. The Zoom hearing will be livestreamed through YouTube and will be displayed on the Commission's website at https://www.nm-prc.org.

The procedural dates and requirements provided herein are subject to further order of the Commission or Hearing Examiner.

PERSONS WITH DISABILITIES

IF YOU ARE AN INDIVIDUAL WITH A DISABILITY WHO IS IN NEED OF A READER, AMPLIFIER, QUALIFIED SIGN LANUGAGE INTERPRETER, OR ANY OTHER FORM OF AUXILIARY AID OR SERVICE TO ATTEND OR PARTICIPATE IN THE HEARING, OR FOR A SUMMARY OR OTHER TYPE OF ACCESSIBLE FORMAT OF PUBLIC DOCUMENTS, PLEASE CONTACT THE DIRECTOR OF ADMINISTRATIVE SERVICES OF THE COMMISSION AT (505) 827-8019 AS SOON AS POSSIBLE PRIOR TO THE HEARING.

BEFORE THE NEW MEXICO PUBLIC REGULATION COMMISSION

APPLICATION FOR APPROVAL OF	**)**	
EL PASO ELECTRIC COMPANY'S	**)**	
RENEWABLE ENERGY ACT PLAN FOR 2026,	**)**	
AND NINTH REVISED RATE NO. 38– RPS	**)**	**CASE NO. 25-00___-UT**
COST RIDER	**)**	
	)	
EL PASO ELECTRIC COMPANY,	**)**	
Applicant.	**)**	
	)	

DIRECT TESTIMONY

OF

JAMES SCHICHTL

MAY 1, 2025

EL PASO ELECTRIC COMPANY
DIRECT TESTIMONY OF
JAMES SCHICHTL

TABLE OF CONTENTS

SUBJECT **PAGE**

I. INTRODUCTION AND QUALIFICATIONS 1

II. PURPOSE OF TESTIMONY 3

III. SUMMARY OF PLAN AND REQUESTED APPROVALS 6

IV. OVERVIEW OF EPE 8

V. STATUS UPDATE 11

VI. APPLICABLE STATUTE AND REGULATIONS 25

VII. REQUESTED VARIANCES 27

EXHIBITS

Exhibit JS-1 – Advice Notice No. 309, Ninth Revised Rate No. 38 Renewable Portfolio Standard (RPS) Cost Rider

Exhibit JS-2 – 2024 Annual Renewable Energy Portfolio Report

EL PASO ELECTRIC COMPANY
DIRECT TESTIMONY OF
JAMES SCHICHTL

I. INTRODUCTION AND QUALIFICATIONS

Q1. PLEASE STATE YOUR NAME AND BUSINESS ADDRESS.

A. My name is James Schichtl, and my business address is 100 North Stanton Street, El Paso, Texas, 79901.

Q2. HOW ARE YOU EMPLOYED?

A. I am employed by El Paso Electric Company ("EPE") as Vice President of Customer and Regulatory Solutions.

Q3. PLEASE SUMMARIZE YOUR EDUCATIONAL AND BUSINESS BACKGROUND.

A. I graduated with a Bachelor of Science in Mechanical Engineering in 1987 from the University of Texas at El Paso, where I also studied graduate level finance, economics, and econometrics. Throughout my career at EPE, I have attended and presented material for numerous seminars and workshops related to cost of service, rate and program design, and regulation.

Prior to joining EPE in February 2012, I spent 18 years in various regulatory functions at Southern California Edison Company ("SCE"), 12 of those in a managerial capacity. As Manager of Pricing Design and Research, I was responsible for SCE's rates and tariffs during deregulation and changes required following the California power crisis in 2001. I was subsequently promoted to

Manager of Tariffs and Advice Letters, with broad responsibility within regulatory for evaluating California statute, rules, and regulations and managing regulatory efforts at the California Public Utilities Commission ("CPUC").

I have been employed by EPE since February 2012. In June 2016, I was promoted from Director to Vice President of Regulatory Affairs. Prior to becoming Director, I was Manager of EPE's Economic & Rate Research group, responsible for EPE's jurisdictional cost of service, rate design analysis, and developing EPE's retail rate schedules and charges. Prior to that, I was a Senior Regulatory Case Manager, responsible for the production, filing, and execution of regulatory applications before both the Public Utility Commission of Texas ("PUCT") and the New Mexico Public Regulation Commission ("NMPRC" or "Commission").

Q4. PLEASE DESCRIBE YOUR CURRENT RESPONSIBILITIES WITH EPE.

A. As Vice President of Customer and Regulatory Solutions, I am responsible for the oversight and direction of EPE's Economic Research, Rate Research, and Regulatory Case Management groups. Economic Research performs load research and analysis and forecasting functions. Rate Research encompasses EPE's rate research function, jurisdictional and class cost of service studies, rate design analysis, and the development of retail rate schedules and charges. The Regulatory Case Management group coordinates and oversees regulatory filings made by EPE with the PUCT, NMPRC, the Federal Energy Regulatory Commission ("FERC"),

and local municipal regulators. My job duties require knowledge of the statutory and regulatory requirements of each jurisdiction. I was assigned responsibility for the Customer Care and Meter and Field Services groups in 2025. Customer Care includes EPE's billing, customer contact, and collections groups. The Meter and Field Services group handles AMI meter installations, other field services, and investigates energy diversion. Up until that time, I was also overseeing the Company's Market Development and Resource Management Department in 2024. In my role as Vice President of Customer and Regulatory Solutions, I continue to regularly coordinate with that department.

Q5. ARE YOU SPONSORING ANY EXHIBITS IN THIS FILING?

A. Yes, I am sponsoring the exhibits listed in the Table of Contents.

Q6. HAVE YOU PREVIOUSLY PRESENTED TESTIMONY BEFORE REGULATORY BODIES?

A. Yes, I have previously filed testimony with and testified before the NMPRC, PUCT, CPUC, and FERC.

II. PURPOSE OF TESTIMONY

Q7. WHAT IS THE PURPOSE OF YOUR TESTIMONY?

A. The purpose of my testimony is to present and support EPE's Application for Approval of its Renewable Energy Act ("REA") Plan for Plan Year 2026 ("Plan" or "2026 Plan") ("Plan Application").

After introducing EPE's other witnesses, my testimony addresses the following -

- I summarize EPE's Plan and request for approvals, including EPE's new REA procurement proposal.
- I support the decision to allocate 100 percent of the renewable energy generated by the new procurement in 2026 to New Mexico to meet EPE's 40 percent RPS requirements, as well as the decision to include 50 MWs of the energy storage component of that project into EPE's renewable energy portfolio
- I address the status of the Carne Project, the status of the Camino Real Landfill to Energy Facility ("CRLEF"); the status of the New Mexico Community Solar program, and the default of the Hecate project, including treatment of the liquidated damages related to that default and the Company's efforts to secure additional renewable resources to satisfy RPS obligations;
- I address legal and regulatory requirements applicable to EPE's Plan Application and requests for approval in this case, including requirements from prior orders;

- I address questions from the NMPRC regarding how recent increases in the allocation of renewable energy impact fuel costs for NM customers; and
- I present and support EPE's request for a variance from the data filing requirements of 17.9.530 NMAC.

Q8. WHO ARE THE OTHER WITNESSES TESTIFYING FOR EPE IN THIS CASE?

A. EPE employees Emmanuel Villalobos, Director of Market Development and Resource Strategy, and Rene Gonzalez, Supervisor of Rates and Regulatory, and Wayne Oliver, a principal with Merrimack Energy Group, Inc., also provide testimony in support of EPE's Application. Mr. Villalobos presents EPE's 2026 Plan Year data and information for approval, and he presents EPE's 2027 Next Plan Year data for informational purposes. For both plan years, Mr. Villalobos presents renewable portfolio standard ("RPS") calculations, forecasted generation, and RPS procurement costs for the renewable energy portfolio supplying renewable energy to New Mexico customers in 2026 and 2027, and other information required to meet the REA and Rule 572. Mr. Villalobos also discusses EPE's proposed new Santa Teresa energy plus battery storage project ("Santa Teresa Project"), presented for approval in this Application to satisfy Plan Year RPS obligations and to make reasonable and consistent progress toward future RPS and zero-carbon standards.

Mr. Oliver served as the independent evaluator for EPE's 2023 Request for Proposals for Renewable Energy for New Mexico ("2023 RFP"). EPE witness Oliver was primarily responsible for reviewing and tracking EPE's implementation of the competitive bidding process from design of the 2023 RFP through the bid evaluation and selection process with the objective of ensuring the competitive procurement process was undertaken in a fair, equitable, and unbiased manner. Mr. Oliver's direct testimony summarizes his final report regarding the conduct and results of the 2023 RFP. Mr. Oliver also testifies to the reasonableness of the contract price for the 50 MWac of the proposed Santa Teresa Facility relative to bids received by EPE and price of available renewable resources elsewhere in the southwestern and western United States.

Mr. Gonzalez presents and supports EPE's Ninth Revised Rate No. 38-Renewable Portfolio Standard ("RPS") Cost Rider ("2026 RPS Cost Rider" or "2026 Rider") for recovery of EPE's Commission-approved RPS procurement costs in 2026, adjusted for reconciliation of actual 2024 RPS costs and rider revenues for calendar year 2024. Mr. Gonzalez also presents the estimated RPS Cost Rider for Next Plan Year (2027) for informational purposes.

III. SUMMARY OF PLAN AND REQUESTED APPROVALS

Q9. PLEASE SUMMARIZE EPE'S 2026 PLAN.

A. EPE's 2026 Plan is provided as Exhibit EV-1 to Mr. Villalobos' testimony. EPE's

2026 Plan provides the information and data required under the REA and Rule 572 for the Plan Year and Next Plan Year and demonstrates that projected amounts of renewable energy and associated renewable energy certificates ("RECs") from EPE's approved renewable energy portfolio and the Santa Teresa Facility proposal will be sufficient to meet the 40 percent RPS in 2026 and 2027.

EPE is also proposing a revised RPS Cost Rider to reflect the expected RPS procurement costs for the 2026 Plan Year, adjusted for the reconciliation of 2024 RPS costs and rider revenues.

Q10. WHAT COMMISSION APPROVALS IS EPE SEEKING IN THIS APPLICATION?

A. EPE requests approval of its 2026 Plan and specifically requests the following authorizations in this Application:

- approval to purchase and assign 100 percent of the renewable energy generated from the Santa Teresa Project in 2026, which is needed to meet the 40 percent RPS requirement in 2026, and to purchase and include 50 MW of the battery energy storage component of the project in EPE's RPS Portfolio;
- authorization for the flexibility to modify allocation of energy from the Santa Teresa Project as needed to meet the RPS;

- authorization to recover Commission-approved 2026 Plan procurement costs through the RPS Cost Rider;
- approval of reconciled RPS rider costs and rider revenue collections for calendar year 2024;
- approval to revise RPS Cost Rider Rate No. 38 monthly rate from $0.015742 per kilowatt-hour ("kWh") to $0.020215 per kWh, to recover approved 2026 Plan Year costs adjusted for the 2024 reconciliation;
- approval of a variance from the data filing requirements of 17.9.530 NMAC; and
- approval of any other Commission variance that is necessary to approve this Plan.

Q11. IS THE 2026 PLAN IN THE PUBLIC INTEREST?

A. Yes. The addition of the new solar and energy storage provided by the Santa Teresa Facility will enable EPE to meet the 40% RPS requirement in Plan Year 2026 at a reasonable cost to customers and sets a path toward compliance with future RPS and zero carbon standards.

IV. OVERVIEW OF EPE

Q12. PLEASE PROVIDE A BRIEF DESCRIPTION OF EPE.

A. EPE is a vertically integrated investor-owned utility providing bundled electric service to approximately 459,500 retail and wholesale customers in a 10,000 square mile area of the Rio Grande Valley in southern New Mexico and west Texas. Its service territory extends from Hatch, New Mexico south to Van Horn, Texas. EPE's principal industrial and large customers include a steel production facility, an oil refinery, several medical centers, two large universities, and several U.S. military installations, including White Sands Missile Range and Holloman Air Force Base in New Mexico and the U.S. Army at Fort Bliss in Texas. EPE directly employs approximately 1,150 people and is one of the largest companies headquartered in El Paso, Texas.

The Company owns or has significant ownership interests in several electrical generating facilities which provide EPE with generation capacity of approximately 2,844 MW. For the year 2024, the Company's energy sources consisted of approximately 58% natural gas and purchased power and 42% carbon-free generation (nuclear and renewables).[1] At the end of 2024, the Company had 238 MW of solar capability which included 11 MW provided by EPE-owned solar facilities and 227 MW supplied through PPAs. EPE utilized 3.2 MW of biogas provided by the CRLEF qualifying facility in 2024 for RPS compliance.

[1] The Company's energy sources consisted of approximately 37.1 percent nuclear fuel, 42.0 percent natural gas, 16.2 percent purchased power and 4.7 percent generated by renewable resources (Company owned solar photovoltaic ("PV") panels and Renewable Purchased Power Agreements).

Q13. WHAT ARE SOME OF THE CHALLENGES FOR EPE IN PROVIDING ELECTRICITY TO MULTIPLE JURISDICTIONS WITH DIFFERING RENEWABLE ENERGY REQUIREMENTS?

A. EPE provides retail service across two jurisdictions with differing state policy requirements related to the provision of renewable energy to customers. Historically, EPE has procured generation to serve customer load on a total company basis, and EPE's customers have benefited from this total company approach because increased diversity and size of load reduces the average cost of power from the system resource portfolio. However, the differing requirements for renewable resources across jurisdictions has limited this total company approach because, in EPE's case, dedicated renewable generation resources must be procured for service to New Mexico customers for RPS compliance purposes as statutory requirements increase.

Acquisition of system renewable resources, those serving both jurisdictions, has provided EPE the ability to differentially allocate more resources as needed for New Mexico. The ability, however, is limited once the PUCT approves a system resource for ratemaking purposes in a general rate case or a fuel reconciliation proceeding in Texas. EPE recently has relied on this flexibility to address New Mexico procurement challenges, which have delayed the addition of New Mexico-dedicated renewable resources. Although historically EPE has made formal requests to change the established allocation percentages, in this Plan filing EPE

requests approval to purchase 100 percent of the renewable energy generated from the Santa Teresa Project in 2026, which is needed to meet the 40 percent RPS requirement in 2026, as well as the flexibility in the future to modify allocation of energy from the Santa Teresa Project as needed to meet the RPS. Below I address EPE's prior formal requests to change the established allocation percentages of the BV I PPA.

Q14. WHAT OTHER CHALLENGES HAS EPE FACED IN PROCURING SUFFICIENT RESOURCES FOR COMPLIANCE WITH RENEWABLE ENERGY REQUIREMENTS?

A. As I discuss below, construction delays and cancellations have significantly impacted EPE's resource procurement, with delays in commercial operations likewise impacting annual RPS compliance. These impacts are exacerbated by significant local opposition to the REA and new renewable resources, with intervenors opposing EPE RPS plan proposals and, when those plans are approved by the NMPRC, challenging Commission orders at the Supreme Court.

V. STATUS UPDATE

Q15. PLEASE SUMMARIZE EPE'S RPS COMPLIANCE BEFORE AND SINCE 2020 WHEN THE RPS REQUIREMENT INCREASED TO 20 PERCENT.

A. EPE files annually both an REA Plan for the Next Plan Year as well as an annual RPS Report for the prior year. In each REA Plan, EPE has set out a plan for how it will meet RPS obligations or has requested and obtained waivers under the applicable statute. For several years preceding the 2019 REA amendments, EPE complied with the RPS standard, which set out both the annual renewable energy requirements as well as the waiver conditions under which a utility would not be required to procure the RPS standard. For example, for several years EPE was limited in its ability to procure renewable energy under the statute because the cost of its Commission-approved portfolio exceeded the reasonable cost threshold ("RCT"). While EPE found ways to increase its RPS energy or REC procurement in those years without increasing the cost of the RPS portfolio, it had not been able to reach the 20 percent RPS until 2024. Prior to the 2019 REA amendments which increased the RCT, EPE was fully compliant under the provisions of the statute, in part based on Commission-approved partial waivers due to RCT constraints.

Most recently, freed in 2019 from the RCT limitations that had restricted its ability to procure additional renewable resources, EPE has demonstrated steady and reasonable progress towards annual RPS goals through Commission approved REA plans, which have authorized EPE to demonstrate RPS compliance from 2020 through 2022 through the procurement of future renewable energy and RECs. EPE supplied 16.11% of retail energy sales to New Mexico customers with renewable resources in 2023 and, as shown in the 2024 Report attached to my testimony as

Exhibit JS-1, EPE supplied just over 20% of the retail energy sales to New Mexico customers with renewable resources in 2024.

Q16. PLEASE ADDRESS THE RESOURCE ISSUES IMPACTING EPE'S ABILITY TO MEET THE RPS SINCE 2020.

A. The primary issue impacting EPE's efforts to meet RPS requirements is the timely deployment of new resources, typified by delays in planned commercial operation dates and the termination of an agreement for an entire resource.

In 2020, EPE received Long-Term Purchased Power Agreement ("LTPPA") approval for two new, system solar generation projects – Buena Vista I ("BVI") a 100 MW solar and 50 MW battery energy storage ("BES") facility and Hecate I, a 100 MW solar generation project.[2] EPE subsequently procured additions to these two projects, for an additional 20 MW for Buena Vista ("BV II") and 50 MW for Hecate ("Hecate II") as New Mexico-dedicated resources for RPS purposes. In 2022, EPE sought amendments to each of the four approved PPAs due to construction delays for both facilities. Approval of those amendments in 2023 included monthly reporting requirements on the status of the facilities which EPE filed in Docket Nos. 19-00099-UT and 19-00348-UT. The Commission Final Order granting that approval was challenged at the New Mexico Supreme Court.

[2] Case No. 19-00348-UT.

The BV I and II facilities were designated commercially operational in June 2023 and have been supplying energy for New Mexico customers and RPS compliance since then, in part, through Commission-approved REA Plans authorizing EPE to temporarily allocate Texas jurisdictional amounts of the BV I system resource to New Mexico for RPS purposes in Plan Years 2024 and 2025.[3] The Hecate facility was never constructed, and the PPAs for the facility were terminated in 2024. I discuss the Hecate facility in more detail later in my testimony.

While BV II was approved by the Commission as a NM dedicated resource to provide renewable energy exclusively to New Mexico, BV I was approved as a system resource to supply both Texas and New Mexico customers on a jurisdictional basis. In its REA 2024 and 2025 Plan filings, EPE requested and received approval to temporarily allocate a larger percentage of BV I energy to New Mexico for RPS compliance purposes. This proposal was necessitated by the termination of the Hecate PPA and delays associated with new RPS generation – the Carne Project approved with EPE's 2022 REA Plan.[4] The Commission's

[3] In the Commission Final Order in Case No. 23-00086-UT, EPE was authorized to initiate this temporary use of BV I for NM customers for the 2024 Plan Year, and the Commission Final Order in Case No. 24-00176-UT authorized continuation of this temporary use of BV I for RPS purposes for the 2025 Plan Year. In Plan Year 2023, EPE filed an emergency request for similar, temporary reallocation of BV I for NM RPS purposes, in Docket No. 23-00086-UT. Unfortunately, the Commission rejected that matter on jurisdictional grounds due to the pending appeal of the Commission Final Order that approved the amendment to the BV I and BV II PPAs.
[4] Case No. 22-00093.

approval of the Carne Project was also challenged at the New Mexico Supreme Court, which contributed to delays in the start of construction of the new facility. The New Mexico Supreme Court has issued decisions affirming the Commission Final Orders related to the approvals of the BV PPA amendments and the Carne Project.

Q17. DID THE COMMISSION QUESTION THE IMPACT OF RECENT INCREASES IN THE ALLOCATION OF RENEWABLE ENERGY FOR NEW MEXICO CUSTOMERS?

A. Yes. In the Final Order approving EPE's 2025 REA Plan, Case No. 24-00176-UT, the Commission noted that the topic of offsetting rate decreases, which would logically follow from the displacement of fossil fuel resources for EPE's New Mexico jurisdiction due to the reassignment of BV1 and Macho Springs and the implementation of the Carne Solar Project, had not been thoroughly discussed in that docket. These offsetting rate decreases could result from reduced fuel purchases, reduced market purchases, and reduced capacity required from other EPE generation resources that are being displaced by the reassignments that EPE had proposed in order to meet New Mexico's RPS.

Q18. HOW DO INCREASING AMOUNTS OF RENEWABLE ENERGY PROCURED OR ALLOCATED FOR RPS COMPLIANCE PURPOSES

IMPACT NEW MEXICO CUSTOMERS?

A. Simply put, energy supplied by renewable generation under the RPS displaces energy supplied by non-renewable resources. On a monthly basis, EPE allocates fuel and purchased power costs between New Mexico and Texas based on the relative proportions of energy consumed by each jurisdiction. For New Mexico, this retail energy allocator is first reduced by the amount of monthly energy supplied by "dedicated" energy resources – RPS resources. This energy credit for RPS resources reduces the amount of system fuel and purchased power expenses allocated to New Mexico. Whether that displacement results in a net benefit or cost to New Mexico customers depends on the relative cost of RPS resources and system fuel and purchased power resources. This is the fundamental impact of the REA and RPS requirements - the move to clean resources may be beneficial on a cost basis only if the resources replaced were of higher cost. But the customer benefit is a cleaner portfolio over time.

Q19. DO YOU HAVE AN UPDATE ON THE STATUS OF THE PLANNED CARNE PROJECT?

A. Yes. EPE's 2024 Renewable Energy Portfolio Report ("2024 Report"), attached to my testimony as Exhibit JS-2, includes an annual update on the status of the Carne Project, pursuant to the Final Order in Case No. 22-00093-UT. Based on the most current information available, EPE now anticipates that commercial operation of

the Carne facility will begin February 27, 2026, due to project delays. EPE's 2026 Plan accounts for this projected delay. EPE will continue to provide quarterly status updates on the Carne Project pursuant to the Final Order in Case No. 22-00093-UT.

Q20. IS THE CHANGE TO THE CARNE COD AUTHORIZED UNDER THE COMMISSION APPROVED AGREEMENTS?

A. Yes. The interconnection delay extension of up to 180 days was permitted under Section 3.6.1(b) of the Carne Project Solar Power Purchase Agreement and Energy Storage Agreement approved in Docket No. 22-00093-UT.

Q21. WHAT IS CRLEF AND WHAT IS ITS STATUS?

A. The Camino Real Landfill to Energy Facility is a Qualifying Facility ("QF") operating near Santa Teresa, NM. CRLEF is a landfill gas to energy facility utilizing two 1.6 MW internal combustion engines powered by methane recovered from the landfill. CRLEF sells energy to EPE as a QF pursuant to Rate No. 16 – Purchased Power Service.

In early 2025, the owner and operator of CRLEF notified EPE that the facility would no longer be generating power. While CRLEF has remained a customer of EPE and continues to receive electric service, they have ceased operating their generator and are no longer selling power to EPE.

Q22. WHAT IS THE STATUS OF THE COMMUNITY SOLAR PROGRAM IN NEW MEXICO?

A. Projects accounting for the full 30 MW allocated to EPE have been awarded, and interconnection agreements have been or are being executed with all counter-parties. Currently, developers are at varying stages of design and build and EPE expects at least one and possibly two Community Solar facilities to become operational in 2025. The Subscriber Organization, Subscriber Consent and other forms have been approved by the Commission, as have EPE's tariffs for the Community Solar Bill Credit and Administrative Cost Rider rates.

Q23. IS EPE REFLECTING THE EXPECTED COMMUNITY SOLAR RECS IN ITS RPS PLANNING?

A. Yes. The two-year projection of costs and RECs for EPE's RPS portfolio presented in the testimony of EPE witness Villalobos includes an additional 30 MW of Community Solar with a portion beginning in Plan Year 2026. Community Solar generation is expected to reach 15 MW in 2026, and an additional 15 MW in 2027 for a total of 30 MW.

Q24. PROVIDE AN OVERVIEW OF THE HECATE PROJECT DEFAULT.

A. As I noted previously, PPA amendment approvals in Case Nos. 19-00099-UT and 19-00348-UT required monthly reporting on the status of the Hecate Project. In its

October 2024 filing, EPE reported that Hecate had indicated that construction of the facility was no longer planned, and EPE filed a notice of termination of the project on November 27, 2024. Following that notice to the Commission, EPE memorialized termination of the PPAs with the new owner of the Hecate Project – D.E. Shaw Renewables Inc. ("DESRI") to ensure collection of the liquidated damages available under the agreements.

Q25. DID EPE COLLECT LIQUIDATED DAMAGES PURSUANT TO THE COMMISSION-APPROVED HECATE PPAS AND, IF SO, IN WHAT AMOUNT?

A. Yes, with default of the PPAs, EPE received the full amount of liquidated damages available under those contracts, $14.9 million, on behalf of New Mexico customers.

Q26. WHAT STEPS WAS EPE REQUIRED TO TAKE TO MAXIMIZE THE AMOUNT OF LIQUIDATED DAMAGES AVAILABLE UNDER THE PPAS FOR NEW MEXICO CUSTOMERS?

A. As early as the Fall of 2023, EPE had been made aware that the Hecate Project likely would not reach its June 2024 COD due to missed milestones, and EPE reported this in its monthly Hecate project status reports filed with the NMPRC. However, Hecate never provided EPE with formal notice under the PPAs; so, in order to continue to collect monthly LDs available under the PPAs, and to not

breach the PPAs itself, EPE waited until Hecate breached the PPAs by missing the June 2024 COD to notify Hecate of its breach. In this way, EPE was able to maximize the collection of LDs available under the PPAs without breaching the agreement.

Q27. WHAT OTHER STEPS DID EPE TAKE WHEN FACED WITH THE HECATE PROJECT'S MISSED MILESTONES?

A. For one, EPE issued the 2023 RFP in October of 2023 which was sized, at that time, to replace the Hecate Project's renewable energy required to meet the RPS. EPE also entered into a letter agreement with the new owner of the Hecate Project, DESRI, allowing it to bid a project into EPE's 2023 NM RFP and 2023 TX RFP to be located at the former Hecate Project site.

Q28. HAVE ANY OF THE HECATE LIQUIDATED DAMAGES BEEN CREDITED TO NEW MEXICO CUSTOMERS?

A. Yes, EPE credited NM customers about $0.5 million of the total amount through the FPPCAC in 2024. EPE stopped monthly crediting when termination of the Hecate PPA appeared imminent in order to first quantify the full amount of liquidated damages.

Q29. IS EPE INCLUDING THE REMAINING LIQUIDATED DAMAGES IN

THE 2026 PROPOSED RPS COST RIDER?

A. No. EPE plans to amortize the remainder of the total amount of liquidated damages through the FPPCAC over a two-year period beginning in 2025. This approach will benefit New Mexico's customers by providing the credit more expeditiously and avoid the reconciliation complexities associated with providing the credits through the RPS Rider.

Q30. WHAT ACTION HAS EPE TAKEN TO PROCURE OTHER RENEWABLE ENERGY IN 2026 TO SATISFY ITS OBLIGATIONS UNDER THE REA?

A. As I mentioned above, and as discussed in detail by EPE witness Villalobos, EPE issued two Requests for Proposals ("RFPs") in 2023 for generation resources for New Mexico and Texas retail customers. DESRI proposed to construct a 150 MW solar and 150 MW battery energy storage facility in Santa Teresa, NM at the former Hecate Project site. The bid resource, now called the Santa Teresa Project ("STP"), was ultimately selected as the winning bid to provide RPS energy in New Mexico and capacity and energy to serve Texas retail load. Mr. Villalobos' direct testimony also addresses a Short-Term New Mexico RPS RFP issued by EPE in 2025 where the company solicited proposals of up to 150,000 MWh from existing renewable resources along with associated RECs beginning the period of April 2025 through December 31, 2025, but received no bids.

Q31. PLEASE DESCRIBE EPE'S NEW PROPOSED STP RESOURCE PROPOSAL.

A. EPE proposes to supply energy to New Mexico customers for RPS compliance purposes at the STP Project price of $28.95/MWh. For Plan Year 2026, EPE is seeking approval to allocate renewable energy to New Mexico customers sufficient to fully meet the 40 percent RPS in 2026. EPE additionally seeks flexibility to modify allocation of energy from the Santa Teresa Project as needed to meet the RPS. Finally, EPE proposes to purchase and include 50 MW of the battery energy storage component of the project at $12.95/kW-month in EPE's RPS Portfolio.

Q32. SINCE EPE SELECTED THE STP TO PROVIDE RENEWABLE ENERGY TO NEW MEXICO AND ENERGY AND CAPACITY TO TEXAS THROUGH ITS 2023 SOLICITATION PROCESS, WHAT SUPPORTS EPE'S 2026 PLAN REQUESTS TO ALLOCATE 100 PERCENT OF THE STP'S 2026 ENERGY TO NEW MEXICO AND TO INCLUDE 50 MW OF THE PROJECT'S ENERGY STORAGE COMPONENT IN EPE'S RPS RESOURCE PORTFOLIO?

A. In both cases, the motivating factor in changing the allocation of resources between jurisdictions is the need for resources. Allocating roughly half of the energy output of the STP to New Mexico customers will enable EPE to meet the RPS requirement in 2026. Because the STP is not expected to commence commercial operation until

mid-year 2026, all of the energy output for the remainder of the year will supply substantially the same amount. EPE would not expect to propose allocation of the total annual energy output of the STP in 2027. And as I discuss below, New Mexico needs capacity to maintain reliable service to retail customers.

Q33. WHAT PROMPTED EPE TO SELECT AND SEEK APPROVAL OF 50 MW OF THE BATTERY ENERGY STORAGE COMPONENT OF THE SANTA TERESA PROJECT FOR NEW MEXICO?

A. There were several factors. First, a storage option procured in a competitive solicitation was available. While EPE's 2023 RFP for New Mexico requested only renewable energy, the facility proposed in the winning bid (the Santa Teresa Project) included a battery energy storage ("BES") component. The full facility, 150 MW of solar generation paired with 150 MW of BES, was also selected as one of the awarded projects in the Texas RFP, which EPE was running concurrent with the NM RFP.

Second, BES sized equal to the solar generation nameplate capacity is becoming standard for these facilities. The BES will allow for firming of the output of the facility during peak hours as well as load shifting, maintaining the full nameplate output of the facility even as solar generation drops later in the day. The presence of battery storage also can mitigate against energy curtailment earlier in the day, when increasing levels of solar generation in EPE's portfolio and in the

western US result in excess energy on the system.

Finally, EPE's NM jurisdiction needs additional capacity now and in the future with the increasing probability of adding new large load customers to the system.

Q34. WHY IS IT REASONABLE FOR EPE TO ACQUIRE THIS RESOURCE AT THIS TIME RATHER THEN THROUGH A NEW SOLICITATION PROCESS?

A. The STP was selected through a competitive solicitation conducted in 2023 with projects selected in 2024. It is likely that similar projects in the future will be priced higher than those bid in 2023 due to current economic conditions and the prospect of tariffs. Given NM's rejection of new gas resources and nuclear generation, BES represents the most economic dispatchable capacity currently available. Additional capacity will also be critical to allow EPE's NM jurisdiction to compete for new large loads in the near term. Conducting a new solicitation at this time would likely increase costs and delay capacity additions for several years.

Q35. DOES THE RESOURCE SATISFY THE APPLICABLE STATUTORY AND REGULATORY REQUIREMENTS FOR RPS?

A. Yes. The STP was procured through a competitive resource selection process, as described by Mr. Villalobos and Mr. Oliver, and provides a total energy cost below

the Reasonable Cost Threshold ("RCT").

Q36. WHAT IS EPE PROPOSING FOR RATE TREATMENT OF THE ENERGY STORAGE COMPONENT OF THE SANTA TERESA PROEJECT?

A. Consistent with the approved ratemaking for the BES component of the Carne project, EPE proposes to recover the cost of the STP solar and BES through the RPS Rider, based on the portion of the facility allocated to NM customers in 2026 and 2027. EPE witnesses Villalobos and Gonzalez describe the development of the associated costs and their incorporation into the rider rate.

Q37. HOW WILL EPE RECOVER COSTS FOR STP ALLOCATED TO NEW MEXICO CUSTOMERS?

A. EPE proposes to recover annual STP costs through the RPS Cost Rider. EPE witnesses Villalobos and Oliver support the reasonableness of the costs of the STP, which was selected as the least cost resource option through a competitive solicitation process, and which is below the RCT.

VI. APPLICABLE STATUTE AND REGULATIONS

Q38. HAS EPE FILED ITS 2024 ANNUAL RENEWABLE ENERGY PORTFOLIO REPORT?

A. Yes. EPE filed its 2024 Annual Renewable Energy Portfolio Report ("2024 Report") on May 1, 2025, as required by Rule 572 and consistent with the REA. As explained in the Report, EPE supplied 20.08% of NM retail energy with renewable resources in 2024 in compliance with the RPS.

Q39. DOES EPE ADDRESS AND COMPLY WITH THE REPORTING REQUIREMENTS SET FORTH IN SECTION 62-16-4(G) OF THE REA AND RULE 572.14.C?

A. Yes. The statutory plan requirements set forth in NMSA Section 62 16 4(G) have been incorporated into Rule 572.14(C) and are addressed in this Plan Application.

Q40. PLEASE SUMMARIZE HOW THE RULE 572.14(C) PLAN REQUIREMENTS ARE ADDRESSED IN EPE'S PLAN APPLICATION.

A. I demonstrate above that EPE's Plan is the public interest, considering factors such as overall cost and economic development opportunities (572.14(C)(13)).

Mr. Villalobos's testimony and exhibits provide for the Plan Year and Next Plan Year: (i) a full explanation of the utility's determination of the RPS and RCT (572.14(C)(1); (ii) the amount of renewable energy EPE plans to provide to comply with the applicable 40 percent RPS under the 2026 Plan (572.14(C)(3)); (iii) explanation of how the 2026 Plan amounts of renewable energy were determined (572.14(C)(4)); and (iv) the 2026 Plan procurement amounts and costs EPE expects

to recover (572.14(C)(5). Mr. Gonzalez presents and supports EPE's proposed adjustments to the RPS Cost Rider rate to recover these costs.

Mr. Villalobos also provides testimony demonstrating that the 2026 Plan is consistent with EPE's last filed IRP (572.14(C)(10)); the capital, operating and fuel costs on a per megawatt hour basis for 2025 of each nonrenewable generation resource rate-base by EPE, or dedicated to EPE through a power purchase agreement of one year or longer (572.14(C)(6); and the nonrenewable generation resources' carbon dioxide emissions on a per megawatt hour basis during that same year (572.14(C)(6)). EPE's strategies used to minimize costs of renewable energy integration, including location, diversity, balancing area activity, demand side management, rate design and load management (572.14(C)(9) are addressed in the 2024 Report, attached to my testimony as Exhibit JS-2. Rule 572.14(C)(14) is not applicable to this filing because EPE does not have a voluntary program. The remaining Rule 572.14(C) requirements applicable to new renewable energy resources are addressed by Mr. Villalobos and myself.

VII. REQUESTED VARIANCES

Q41. HAS EPE SUBMITTED AN ADVICE NOTICE REFLECTING PROPOSED CHANGES TO RATE NO. 38?

A. Yes. EPE filed Advice Notice No. 309 concurrent with this filing. A copy of Advice Notice No. 309 is attached to my testimony as Exhibit JS-1.

IS EPE REQUESTING A VARIANCE FROM CERTAIN RULE REQUIREMENTS?

A. Yes. EPE also requests a variance from the minimum data standard requirements set out in 17.9.530 NMAC ("Rule 530"), to the extent the requirement applies to EPE's request to approve its revised RPS Cost Rider.

Q42. WHAT IS THE SITUATION THAT NECESSITATES THE VARIANCE EPE'S REQUEST FOR VARIANCE FROM RULE 530?

A. EPE seeks a variance from the minimum data requirements for 17.9.530 because the extensive data schedules under Rule 530 are not needed for the Commission to review and approve EPE's request to revise the RPS Cost Rider.

Q43. WHAT IS THE EFFECT OF COMPLYING WITH THE RULE IF THE VARIANCE IS NOT GRANTED?

A. Denying the variance would impose a substantial burden on EPE, Staff, and intervenors to prepare and consider information which does not inform the Commission's consideration of EPE's request to revise the Rider.

Q44. WHAT RESULT WILL THE VARIANCE HAVE IF GRANTED?

A. Granting the variance will eliminate the burden and cost of providing data that does not inform the Commission's decision.

Q45. DOES GRANTING THE PROPOSED VARIANCE ACHIEVE THE PURPOSES OF THE RULE AND IS IT IN THE PUBLIC INTEREST?

A. Yes. As stated above, the information does not inform the Commission's decision to grant to rate rider. Granting the variance is in the public interest and should be granted to eliminate the burden and cost of providing data that does not inform the Commission's decision. For these reasons, and to the extent required, EPE requests a variance from the minimum data standard requirements set out in Rule 530.

Q46. DOES THIS CONCLUDE YOUR TESTIMONY?

A. Yes, it does.

EL PASO ELECTRIC COMPANY

ADVICE NOTICE NO. 309

**NEW MEXICO PUBLIC REGULATION COMMISSION
OF THE STATE OF NEW MEXICO**

El Paso Electric Company (EPE) hereby gives notice to the public and the Commission of the filing and publishing of the following changes in its Rates, which are attached hereto:

RATES

Rate Number	Title of Rate	Cancelling Rate Number	Date Effective
9th Revised Rate No. 38	Renewable Portfolio Standard (RPS) Cost Rider	8th Revised Rate No. 38	01/01/2026

Advice Notice No. **309**

Signature/Title */s/James Schichtl*
James Schichtl
Vice President – Customer and Regulatory Solutions

EL PASO ELECTRIC COMPANY

REVISED TABLE OF CONTENTS

RATE SCHEDULES

Rate Schedule Number	Title
14th Revised Rate 1	Residential Service Rate
16th Revised Rate 3	Small General Service Rate
16th Revised Rate 4	General Service Rate
16th Revised Rate 5	Irrigation Service Rate
13th Revised Rate 7	City and County Service Rate
13th Revised Rate 8	Water, Sewage, Storm Sewage Pumping or Sewage Disposal Rate
13th Revised Rate 9	Large Power Service Rate
15th Revised Rate 10	Military Research and Development Power Rate
14th Revised Rate 11	Street Lighting Service Rate
14th Revised Rate 12	Private Area Lighting Rate
11th Revised Rate 15	Miscellaneous Service Charges
44th Revised Rate 16	Purchased Power Service
13th Revised Rate 17	Efficient Use of Energy Recovery Factor (EUERF)
20th Revised Rate 18	Fuel and Purchased Power Cost Adjustment Clause (FPPCAC)
12th Revised Rate 19	Seasonal Agriculture Processing Service Rate
11th Revised Rate 21	Supplementary Power Service for Cogeneration and Small Power Production Facilities
12th Revised Rate 22	Backup Power Service for Cogeneration and Small Power Production Facilities

Advice Notice No. **309**

Signature/Title */s/James Schichtl*
James Schichtl
Vice President – Customer and Regulatory Solutions

EL PASO ELECTRIC COMPANY

REVISED TABLE OF CONTENTS

RATE SCHEDULES

12th Revised Rate 23	Maintenance Power Service for Cogeneration and Small Power Production Facilities	
12th Revised Rate 24	Curtailable Power Service for Cogeneration and Small Power Production Facilities	
10th Revised Rate 25	Outdoor Recreational Lighting Service Rate	
9th Revised Rate 26	State University Service Rate	
7th Revised Rate 29	Noticed Interruptible Service for Rate Large Power Service	
7th Revised Rate 30	Load Retention Rate	
9th Revised Rate 38	Renewable Portfolio Standard (RPS) Cost Rider	X
1st Revised Rate 39	Economic Development Rate	
1st Revised Rate 42	Experimental Electric Vehicle Charging Rate (EEVC)	
2nd Revised Rate 44	Transportation Electrification Plan (TEP) Cost Rider	
3rd Revised Rate 46	Advanced Metering System Rider (AMS)	
2nd Revised Rate 47	Community Solar Program Rate	
1st Revised Rate 47.1	Community Solar Program Administrative Cost Rider Rate	
Original Rate 48	Pilot Residential Time-Varying Rate	
Original Rate 49	Pilot Small General Service Time-Varying Rate	

Advice Notice No. **309**

Signature/Title */s/James Schichtl*
James Schichtl
Vice President – Customer and Regulatory Solutions

EL PASO ELECTRIC COMPANY

9th REVISED RATE NO. 38 X
CANCELLING 8th REVISED RATE NO. 38 X

RENEWABLE PORTFOLIO STANDARD (RPS) COST RIDER

APPLICABILITY

This Rider is applicable to bills for electric service provided under all of EPE's retail rate schedules. This Rider is established to recover Renewable Portfolio Standard ("RPS") costs. This Rider is not applicable to customers exempt from charges for renewable energy procurements pursuant to NMSA 1978, Section 62-16-4(C).

TERRITORY

Areas served by the Company in Doña Ana, Sierra, Otero and Luna Counties.

MONTHLY RATES

	Rate
All Retail Rate Schedules, per kWh	$0.020215

X

RECONCILIATION FILING

This Rider shall be adjusted to reconcile a prior plan year's RPS Cost Rider revenues with actual RPS costs. Any over-recovery of the previously approved RPS costs will represent a credit to and reduction of the approved Rider in a subsequent plan year and any under-recovery of the previously approved renewable energy costs will represent a charge in addition to the approved Rider in a subsequent plan year.

Advice Notice No. **309**

Signature/Title */s/James Schichtl*
James Schichtl
Vice President – Customer and Regulatory Solutions

2024

El Paso Electric Company

[ANNUAL RENEWABLE ENERGY PORTFOLIO REPORT]

Annual Report Pursuant to the Renewable Energy Act, NMSA 1978, § 62-16-4(G) and the New Mexico Public Regulation Commission Rule 572, 17.9.572.19 NMAC

I. INTRODUCTION

El Paso Electric Company ("EPE") hereby files its Annual Renewable Energy Portfolio Report for calendar year 2024 ("2024 Report" or "Report"), pursuant to the Renewable Energy Act, NMSA 1978, § 62-16-4(G) ("REA" or "Act") and the New Mexico Public Regulation Commission's ("NMPRC" or "Commission"), Renewable Energy Rule for Electric Utilities, 17.9.572.19 NMAC ("Rule" or "Rule 572"). The 2024 Report addresses the reporting requirements set forth in Rule 572.19 and Section 62-16-4(G)(2) and (4) of the Act.[1] Pursuant to Commission Orders in Case No. 22-00093-UT approving EPE's Renewable Energy Act Plan for 2023 (the "Plan" or "2023 Plan"), this report also includes EPE's annual update on the Status of the Carne Project (Section VII).

EPE's REA Plan for Plan Year 2024, approved in Docket No. 23-00086-UT, (the "2024 Plan," or "2024 REA Plan") estimated the RECs needed to achieve the 20 percent 2024 renewable portfolio standard ("RPS") based on EPE's net forecasted 2024 New Mexico retail energy sales of 1,774,076 megawatt-hours ("MWh"). EPE's actual 2024 New Mexico net retail energy sales were 1,819,521 MWh.

Accordingly, the actual renewable energy credits ("RECs") needed to establish 20 percent RPS in 2024 was 363,904 RECs, calculated as 20 percent of the actual jurisdictional net retail energy sales (1,819,521 MWh). **Table 1** below provides the net forecasted and net actual retail energy sales and corresponding RECs needed to meet RPS on a month-to-month basis. RECs are generally acquired in MWh units and are so stated in the Report unless otherwise indicated.

/

/

[1] Subsections 62-16-4(G)(1) and (3) were addressed in EPE's 2023 REA Plan filing.

Table 1			
2024 New Mexico Net Retail Energy Sales (MWh)			
Month	Forecasted	Actual	Actual RECs Needed to Meet 20% RPS (MWh)
Jan	144,113	135,779	27,156
Feb	126,613	127,127	25,425
Mar	125,316	115,804	23,161
Apr	118,255	114,968	22,994
May	130,239	133,690	26,738
Jun	169,779	172,254	34,451
Jul	193,778	208,033	41,607
Aug	201,374	208,015	41,603
Sep	179,957	204,375	40,875
Oct	145,730	157,832	31,566
Nov	118,061	127,749	25,550
Dec	128,486	121,659	24,332
subTotal	1,781,700	1,827,284	365,457
Less NMSU	7,624	7,763	1,553
Net Total	1,774,076	1,819,521	363,904
	2024 Total RECs Needed to Meet RPS		**363,904**

Based on the presentation in **Table 4** below, EPE met the 20% RPS requirements for 2024. EPE retired 362,809 RECs in April 2025 and will retire an additional 2,466 RECs to be received in WREGIS for a total of 365,275 RECs. These RECs contributed towards compliance with the 2024 RPS, which represents 20.08 percent of actual New Mexico net retail energy sales.

II. REA REQUIREMENTS

A. COST OF CAPITAL, OPERATING, AND FUEL AND CARBON DIOXIDE EMISSIONS FROM RATE-BASED AND DEDICATED NON-RENEWABLE GENERATION RESOURCES

Pursuant to Section 62-16-4(G)(2) of the REA, **Table 2** below provides the "capital, operating and fuel costs" during the 2024 calendar year of each of EPE's rate-based and dedicated

non-renewable generation resources on a per megawatt basis. **Table 2** also provides the "nonrenewable generation resources' carbon dioxide emissions on a per megawatt-hour basis" during 2024.

Table: 2					
2024 Nonrenewable Emissions & Costs					
Generating Plant	Emissions (CO_2)[1] lb/MWh (gross)	Costs[2]			
		Fuel $/MWh	Capital $/MWh	Operating $/MWh	Total Cost $/MWh
Newman Power Plant	1,125.65	10.39	16.92	11.99	39.30
Montana Power Plant	1,081.41	13.89	31.24	7.38	52.51
Rio Grande Power Plant	1,155.46	12.24	14.45	14.28	40.97
Copper Power Plant	1,956.34	39.11	68.22	33.04	140.37
Palo Verde Power Plant	0.00	10.30	19.33	17.10	46.73

1. CO2 Emission Data is calculated using 40 CFR 75 Appendix G methodology.
2. Costs are based on the Company's 2024 FERC Form 1 and general ledger. Depreciation expense is included in the Capital $/MWh calculation.

B. STRATEGIES USED TO MINIMIZE COSTS OF RENEWABLE ENERGY INTEGRATION

Pursuant to Section 62-16-4(G)(4) of the REA, EPE provides the following explanation of its strategies used to minimize costs of renewable energy integration.

On October 11, 2024, EPE initiated its Rule 17.7.2 Integrated Resource Plan ("IRP") process by filing *El Paso Electric Company's Notice of Intent to File Integrated Resource Plan*

for the Period of 2025-2044 docketing NMPRC Case No. 24-00260-UT. EPE and the Commission-selected facilitator of EPE's IRP public advisory stakeholder process, GridWorks, have conducted four stakeholder workshops to date, with the most recent workshop occurring on April 23, 2025. EPE has engaged workshop participants to receive stakeholder modelling recommendations to incorporate into the IRP's cost-effective analysis to select the least cost resource portfolio that meets New Mexico customers' needs while meeting the states renewable and clean energy objectives. EPE has engaged Energy and Environmental Economics, Inc. ("E3") to assist it with this process. EPE's IRP is planned to be filed by September 1, 2025. This is one strategy EPE has used to minimize costs of renewable energy integration.

EPE additionally works to minimize costs of renewable energy integration by soliciting generation resources by means of competitive requests for proposals ("RFP") for capacity and renewable energy resources for RPS compliance. EPE will conduct a competitive solicitation process pursuant to the Commission's IRP Rule after EPE's IRP Statement of Need and Action Plan are determined by the Commission to be compliant with the requirements of the IRP Rule.

The evaluation of RFP proposals includes the energy cost, energy storage capacity cost, interconnection and/or transmission upgrade costs, and any other costs associated with delivering the renewable energy to the EPE system. EPE also takes into consideration the reasonable cost threshold constraint as set by the REA in selecting new renewable energy generation options. As EPE integrates higher levels of renewable energy into its system, integration investments in addition to interconnection facilities and transmission upgrades, may be required. Also, EPE's RFP solicitations are open to all renewable energy generation technology types including demand-side and load-management resources, above and beyond, the current Efficient Use of Energy Act requirements.

EPE also issues an RFP for RPS renewable energy generation resources, outside of the IRP process as allowed by Rule 17.7.3.12(M), when it is projected that Commission-approved existing and planned renewable resource energy will not be sufficient to meet the incremental RPS targets set forth in the REA. In October 2023, EPE issued an RFP to meet incremental RPS targets beginning in 2025, if achievable, but no later than 2027, due to the Termination of the Hecate Purchased Power Agreements approved by the Commission in Docket Nos. 19-00099-UT and 19-00348-UT. A resource selected from this solicitation is being presented to the Commission for approval in EPE's REA Plan filing for 2026, filed concurrently with this report.

The issuance of the RPS RFP is a mechanism used to solicit competitive bids from interested developers for desired RPS projects and to select the most cost-effective project(s), from the developer bids, independent of renewable generation technology type. The EPE New Mexico RFP selection process includes both, a qualitative review and quantitative review. The qualitative review utilizes criteria such as: bid submitted on time, eligible resource technology, submittal of all required RFP forms, bidder experience, site control, interconnection plan, bidder financial capability, amongst others. The quantitative review takes the economic information for each proposal option and calculates the Levelized Cost of Energy ("LCOE"). The proposal bids are then short-listed based on the qualitative review and LCOE, taking into consideration that all resource types and sizes are represented on the short-list. The short-listed proposal bids are modeled using PLEXOS software for selection of the most cost-effective resource portfolio that meets both, RPS and reliability constraints. PLEXOS is a robust power and energy system simulation software that is widely accepted in the electric power industry for resource expansion, and selection of the most cost-effective resource portfolio, for long-term planning horizon Bid Project characteristics such

as; resource-type, cost, capacity, COD, lifetime, interconnection/transmission, and generation are some of the characteristics that are modeled in the PLEXOS EPE system model.

To verify the "cost-reasonableness" of the projects selected, EPE conducts a comparative analysis which include the most current published levelized cost of energy reports from: Lazard's Levelized Cost of Energy Reports, Lawrence Berkley National Laboratory ("LBNL") for southwest region independent system operators, Public Service of New Mexico ("PNM"), and the National Renewable Energy Laboratory Annual Technology Baseline reports ("NREL-ATB")

As reported to the Commission in its inquiry into Western Market Development, Docket No. 23-00268-UT, EPE has provided notice of its intent to join the Southwest Power Pool ("SPP") Market+ ("Markets+"). EPE is expected to also join the Western Resource Adequacy Program ("WRAP") as a prerequisite to joining Markets+. This program is operated by the SPP towards optimizing resources adequacy and access to shared resources. Regional market participation holds the potential for significant benefits, including potential minimized costs of renewable energy integration, enhanced grid reliability, improved resource optimization, and potential cost savings for both ratepayers and utilities; however, adequate transmission availability will be required to be developed and is recognized in need of improvement.

Finally, since joining the Western Energy Imbalance Market ("EIM") operated by the California Independent System Operator ("CAISO") on April 5, 2023, the market has optimized the regulation of customer load requirements and variable output from renewable resources by utilizing the most efficient regional generating resources, including renewables, made available for EIM dispatch. In doing so, the EIM facilitates greater integration of renewable resources and mitigates their curtailment by making these resources available for EIM entities to purchase.

III. MERGER COMMITMENTS

EFFORTS TO ADD RENEWABLE ENERGY TO THE EPE POWER SUPPLY PORTFOLIO DURING THE PRIOR CALENDAR YEAR (2024) AND ASSURE COMPLIANCE TOWARDS THE NEW MEXICO RENEWABLE ENERGY ACT

Pursuant to Commission Final Order adopting Amended Certification of Stipulation in Case No. 19-00234-UT, at Regulatory Commitment No. 18, EPE provides the status of efforts during the prior calendar year 2024 to add renewable energy to its power supply portfolio and assure compliance toward the New Mexico REA.

Summary of 2024 Initiatives

EPE's 2024 efforts to add renewable energy to its power supply portfolio included the following actions in its New Mexico which are detailed below.

EPE's 2024 REA Plan (filed in 2023)

- EPE's 2024 REA Plan, approved in Docket No. 23-00086-UT, authorized EPE to reallocate Texas jurisdictional amounts of Buena Vista 1 PPA ("BV 1") energy and RECs from EPE's Texas to EPE's New Mexico customers upon EPE notice that the Hecate Project, approved and amended by Commission Final Orders in Case Nos. 19-00099-UT and 19-00348-UT, would not become operational.
- On January 23, 2024, pursuant to the Commission Final Order in Case No. 23-00086-UT (12/26/23), EPE filed *El Paso Electric Company's Notice that Hecate Will Not Become Operational on June 1, 2024 and EPE Will Begin Reallocation of BV 1 Energy and RECs* from Texas to New Mexico Customers.
- EPE began the BV 1 reallocation in February 2024 for NM RPS purposes.

2023 NM RPS RFP

- On October 6, 2023, EPE issued a New Mexico RPS RFP, with the objective of obtaining short-terms and/or long-term cost effective and reliable electric resources available to meet EPE's New Mexico RPS requirements, in the preliminary amount of 150,000 MWh per year, beginning May 1, 2025, if achievable, but no later than May 1, 2027.
- On December 22, 2023, EPE entered into an agreement with D.E. Shaw Renewable Investments, Inc. ("DESRI") consenting to the submission of the Santa Teresa Project as a proposal into EPE's 2023 NM RPS and 2023 Texas All-Source RFPs. At the time, EPE and DESRI representatives were in discussions regarding the potential termination of the existing Hecate Project PPAs.
- Throughout 2024 and until May 15, 2024, EPE worked on this 2023 NM RPS RFP (and a concurrently filed Texas All-Source RFP) when it notified DESRI that its Santa Teresa Project had been selected to proceed with contract negotiations.
- On November 18, 2024, EPE executed a Purchase Power Agreement and an Energy Storage Agreement with DESRI for the Santa Teresa Project. The Santa Teresa project is comprised of a 150 MW solar PV and 150 MW battery storage that is expected to be commercially operational in June 2026. EPE's 2026 REA Plan Filing seeks approval to purchase and assign renewable energy and RECs generated from the Santa Teresa Project to meet EPE's 2026 ERPS and to purchase and include 50 MW of the battery energy storage component of the project in EPE's RPS Portfolio.

EPE's 2025 REA Plan (filed 2024)

- On May 1, 2024, EPE filed its 2025 REA Plan docketing Case No. 24-00176-UT,
- The 2025 REA Plan sought Commission approval to continue to reallocate Texas jurisdiction amounts of BV 1 to EPE's New Mexico customers and to reallocate up to 35,000 MWhs of Texas jurisdictional amounts of Macho Springs to EPE's New Mexico customers to make up projected 2025 RPS shortfalls due to the Hecate Termination and possible delay of the planned Carne Project.
- EPE's 2025 Plan was unopposed and was approved without a hearing by Commission Final Order in Case No. 24-00176-UT (10/17/25).

Community Solar Program

- Throughout 2024, EPE actively participated in the Commission's Community Solar Program being implemented pursuant to the New Mexico Community Solar Act and Rule 17.9.573.
- In 2024, EPE finalized interconnection agreements with all six, 5 MW Community Solar projects selected by the Commission's Community Solar Program implementor, after a study period.
- During 2024, EPE worked on Phase 2 of the Commission's consolidated Community Solar Proceedings in Docket No. 23-00071-UT to develop Community Solar tariffs, with the First Prehearing Order issued by the assigned Hearing Examiner on January 8, 2024, public hearings held January 17-19, 2024, and Phase 2 Final Order issued November 26, 2024.
- On December 20, 2024, EPE submitted Advice Notice No. 303 – 1st Revised Rate No. 47 – Community Solar Program Credit Rate and Original Rate No. 47.1 -

Community Solar Program Administrative Cost Rider Rate and filed it as a compliance filing in Docket No. 23-00071-UT pursuant to Commission Phase 2 Final Order (11/26/24).[i]

City of Las Cruces' Appeal of Commission Order Approving BV 1 and 2 PPAs

- In 2024, EPE submitted an Answer Brief (4/5/24) in Supreme Court Case No. S-1-C-40048, the City of Las Cruces' appeal of the Commission Final Order in Case No. 19-00099-UT and 19-00348-UT amending the BV 1 and BV 2 PPAs. On January 13, 2025, the Court issued a dispositional order affirming the Commission Final Order approving the BV 1 and BV 2 PPA amendments and on February 5, 2025, the Court issued its Mandate to the Commission.
- In January 26, 2023, the BV Project 150 MW solar plus battery storage facility located in Otero, New Mexico, began generating test energy; and, on July 11, 2023, the facility began commercial operation.

City of Las Cruces' Appeal of Commission Order Approving Carne Project

- On December 2, 2024, in Supreme Court Case No. S-1-SC-039967 (the City of Las Cruces' appeal of the Commission Final Order approving EPE's 2023 REA Plan, including the Carne Project PPA and ESA) EPE filed a Notice of Joinder in Response to Appellee the New Mexico Public Regulation Commission to the Motion for Rehearing.
- On October 10, 2024, the Court issued a dispositional order affirming the Commission final order which had approved the project. On October 25, 2024, the City of Las Cruces filed a motion for rehearing of the disposition order of affirmance which was denied by Court order issued January 3, 2025 finally

resolving the appeal. The Court's Mandate to the Commission was issued on January 17, 2025.

- Due the uncertainty caused by the pending appeal, EPE and DESRI agreed to waive the NMPRC Final Approval condition precedent set forth in the project's PPA and ESA, and EPE also agreed to purchase the project's energy irrespective of the Court's disposition on appeal. A Letter Agreement between EPE and DESRI, dated April 26, 2024, memorializes these agreements.
- Further, because of the delay caused by the City appeal, which qualified as a Force Majeure Event under the project's PPA and ESA, EPE and DESRI additionally entered in a subsequent Letter Agreement dated April 30, 2024 agreeing to a new COD of August 31, 2025.
- In EPE's Q1 2025 Status Report of the Carne Project filed in Case No. 22-00093-UT, EPE notified the Commission of an Interconnection Delay extension for the project until February 27, 2026 under the PPA and ESA.

IV. RULE 572 REQUIREMENTS

A. ITEMIZATION OF RENEWABLE ENERGY GENERATION AND/OR RENEWABLE ENERGY CERTIFICATE PURCHASES AND SALES

EPE's renewable energy generation and renewable energy and REC purchases for calendar year 2024 are listed below.

EPE-Owned Renewable Energy Generation

In December 2009, EPE installed a 75.6 kW_{DC} (approximately 64.3 kW_{AC}) solar photovoltaic ("PV") system, at its Rio Grande Power Station located in New Mexico. In 2024, the

PV system at Rio Grande Power Station generated 19,180 kWh. The energy generated is delivered directly into EPE's distribution system.

In addition, EPE has six small solar generation facilities located in Texas that are assigned to its Texas retail jurisdiction. Along with the approximately 64.3 kW_{AC} solar PV system installed in December 2009 at its Rio Grande Power Station in New Mexico, an identical size system was installed at the Newman Power Station in Texas, which generated 25,537 kWh in 2024. Another solar project, located on the rooftop of EPE's main offices in the Stanton Tower building in downtown El Paso (the "Stanton Project"), consists of mono-crystalline solar PV panels with a total capacity of 31.4 kW_{AC}. In 2024, the Stanton Project generated 60,215 kWh. The energy generated by these solar generation facilities is delivered directly into EPE's distribution system.

In partnership with El Paso Community College ("EPCC"), EPE installed poly-crystalline PV panels with a total capacity of 14.5 kW_{AC} at the Advanced Technology Center facility at EPCC's Valle Verde Campus ("EPCC Project"). The panels are roof and awning mounted. Additionally, EPE donated 2 kW of the project's capacity, which is on pedestal mounts, to EPCC for instructional purposes. The system is owned and operated by EPE, and the energy generated is delivered directly into EPE's distribution system. In 2024, the EPCC Project generated 18,136 kWh.

Another solar project is located on land owned by EPE adjacent to the Wrangler Substation ("Wrangler Project"). The Wrangler Project is a 47.6 kW_{AC} solar concentrated photovoltaic ("CPV") system with dual-axis tracking. The CPV technology uses lenses to concentrate a large amount of sunlight onto a small area of solar PV materials to generate electricity. In 2024, the Wrangler Project generated 1,361 kWh. The energy generated is delivered directly into EPE's distribution system.

The "Van Horn Project," located in Van Horn, Texas, began commercial operation in August 2013. This solar installation is a 20 kW_{DC}, PV system that consists of 80 CentroSolar Poly-Crystalline E250 panels mounted on elevated structures. A monitoring system at the Van Horn Project facility allows EPE to measure the performance of each PV module in order to maximize solar power harvesting. The Van Horn Project generated 25,306 kWh in 2024. The energy generated is delivered directly into EPE's distribution system.

On May 31, 2017, EPE's Texas Community Solar 3 MW facility began commercial operation. This facility is located next to EPE's Montana Power Station in far East El Paso County. In 2019, the Program was amended by expanding the solar generation capacity by two MWs bringing the program to a total capacity of five megawatts. In 2023, the Program was amended by expanding the solar generation capacity by ten MWs. In 2024, this facility generated a total of 4,899,940 kWh of renewable energy.

In October 2018, the 5 MW Solar Project at HAFB in New Mexico became operational providing additional RECs to the RPS in the same year. The project was approved by the Commission in Case No. 15-00185-UT as a customer dedicated resource for HAFB. The project is owned by EPE and paid for by HAFB via a special contract rate over the life of the project, as approved by the Commission in Case No. 16-00224-UT. Consistent with the approvals in those cases, EPE has agreed to use the RECs for the RPS at no additional cost to New Mexico. In 2024, this facility generated a total of 3,268,905 kWh of renewable energy.

In May of 2022, the 3 MW New Mexico State University Program became operational. The project and its special contract rates were approved by Commission Final Order in Case No. 19-00350-UT. Under the terms of the special contract rate, NMSU retains the RECs generated from the projects. In 2024, this facility generated a total of 7,762,689 kWh of renewable energy.

The Texas Solar One Project is a Company owned, Texas dedicated 150 MW solar project that has two components: one for 50 MW of solar capacity that is part of a voluntary subscription program called Texas Solar Power ("TXBSP"), and another for 100 MW of solar capacity dedicated to Texas customers. In 2024, the PUCT amended EPE's CCN approving this project, and in 2025 the TXBSP was approved by the PUCT. The solar project is expected to be commercially operational in August 2025.

EPE Purchases of Renewable Energy and/or RECs

ATTACHMENT 1 – Summary of EPE Renewable Requirements and Purchases for 2024;

EPE also provides the following required documentation regarding its renewable generation purchases.

ATTACHMENT 2 – Monthly Solar Energy Purchase Documentation – Hatch Solar Energy Center 1, LLC

ATTACHMENT 3 – Monthly Solar Energy Purchase Documentation – Solar Roadrunner LLC

ATTACHMENT 4 – Monthly Solar Energy Purchase Documentation – SunE EPE1 LLC and SunE EPE2 LLC

ATTACHMENT 5 – Monthly Solar Energy Purchase Documentation –Macho Springs Solar, LLC

ATTACHMENT 6 – Monthly Biogas Energy Purchase Documentation – Four Peaks Energy, LLC, Camino Real Landfill Gas to Energy Facility ("CRLEF")

ATTACHMENT 7 – Monthly Solar Energy Purchase Documentation – Holloman Atlas Solar Array – Holloman Air Force Base

ATTACHMENT 8 – Monthly Solar Energy Purchase Documentation – Buena Vista 1

ATTACHMENT 9 – Monthly Solar Energy Purchase Documentation – Buena Vista 2

ATTACHMENT 10 – Summary of EPE's Distributed Generation Information

EPE Other Renewable Purchases

PSEG Energy Center is a 10 MW single-axis tracking system with poly-crystalline modules. This facility is located in Northeast El Paso, Texas, at EPE's Newman Power Station, and was commissioned in December 2014. EPE has a 30-year contract with the owner for the purchase of energy. In 2024, PSEG Energy Center produced 13,217,85 kWh.

The Buena Vista Project is a new facility that was recently added to EPE's resource portfolio to become commercially operational on July 11, 2023. BV1, which resulted from the 2017 All Source RFP and was approved by Commission Final Order in Case No.19-00348-UT, is a system resource comprised of 150 MW solar and 50 MW battery energy storage. BV2, which part of the same facility, is a 20 MW New solar resource dedicated to New Mexico that resulted from the 2019 RPS RFP and received regulatory approval in Case Nos. 19-00099-UT. In 2024, the BV Project generated a total of 388,428,640 kWh of renewable energy.

The Milagro Project is a solar plus battery storage facility that will be added to EPE's resource portfolio and is anticipated to become commercially operational in October 2025. The Milagro Project, which resulted from the 2021 Texas All Source RFP issued in December 2021, is a Texas dedicated resource comprised of 150 MW solar and 50 MW battery energy storage. The project PPA with EDF Renewables, Inc. was executed in August 2023.

The Buena Vista III Project ("BVIII") is a solar plus battery storage facility that will also be added to EPE's resource portfolio as a Texas dedicated resource that resulted from the 2023 Texas All Source RFP that was issued in October 2023. BVIII is comprised of 100 MW solar and 100 MW battery energy storage and is anticipated to become commercially operational in April 2027. The BVIII PPA and energy storage agreements with NextEra Energy, Inc. were executed in April 2025.

EPE Sale of Renewable Energy and/or RECs

EPE sold 122,680,196 vintage 2024 RECs in 2024 from the Texas jurisdictional portion of the Macho Springs facility.

B. RENEWABLE ENERGY CERTIFICATE INFORMATION

All RECs used for RPS purposes were acquired pursuant to EPE's Commission-approved procurement plans, approved purchased power agreements, and approved tariffs, such as Rate No. 16 – Purchased Power Service ("Rate 16") (NMPRC Case Nos. 05-00355-UT, 06-00365-UT, 07-00360-UT, 08-00219-UT, 09-00259-UT 10-00200-UT, 11-00263-UT, 12-00217-UT, 13-00223-UT, 14-00121-UT, 15-00117-UT, 16-00109-UT, 17-00090-UT, 18-00109-UT, 19-00099-UT, 21-00111-UT, 22-00093-UT, 23-00086-UT, and 24-000176-UT).

On December 13, 2007, EPE became a registered Account Holder with Western Renewable Energy Generation Information System ("WREGIS"). EPE also registered with WREGIS on June 21, 2011 as a Qualifying Reporting Entity to report generation of renewable facilities in New Mexico with capacity greater than 360 kW. EPE also reports to WREGIS the aggregated RECs acquired from customers through EPE's Distributed Generation REC Purchase Program.

A summary of all the RECs acquired by EPE are included in **ATTACHMENT 1**.

C. LIST OF RENEWABLE ENERGY CERTIFICATES

EPE acquired 365,275 RECs in 2024 for the RPS.

Table 3 below summarizes the total 2024 RECs and the number of RECs that have already been registered and retired in WREGIS for the RPS as of April 2025.

/

/

/

/

Table 3			
Contract	**Source Type**	**Total 2024 RECs**	**Retired 2024 RECs**
Previously Banked (2024)	Wind		-
	Solar		-
	Other		-
	DG		-
Hatch Solar Energy Center 1 LLC	Solar	10,061	10,060
Solar Roadrunner LLC	Solar	46,048	46,048
SunE EPE 1, LLC & SunE EPE2, LLC (a)	Solar	56,694	55,074
Macho Springs LLC	Solar	22,572	22,572
Four Peaks Energy, LLC - CRLEF	Biogas	14,668	14,668
EPE's Distributed Generation	DG	16,039	15,194
Holloman Atlas Solar Array - Holloman Air Force Base HAFB	Solar	3,269	3,269
Buena Vista 1	Solar	134,986	134,986
Buena Vista 2	Solar	60,938	60,938
Total		**365,275**	**362,809**

(a)

HATCH SOLAR ("HATCH") PHOTOVOLTAIC ENERGY WITH RENEWABLE ENERGY CERTIFICATES

1) Seller

Name: Hatch Solar Energy Center 1, LLC
Address: 700 Universe Blvd.
FEB/JB E3446
Juno Beach, FL 33408
Telephone: (561) 691-7171
E-mail:

2) Utility Owner

Name: EPE
Address: P.O. Box 982
El Paso, TX 79960
Telephone: (915) 543-5752
E-mail: powercontractadmin@epelectric.com

3-7) Transaction Information

Hatch is a 5-MW solar PV facility located in Hatch, New Mexico, that sells renewable energy with associated RECs to EPE under a 25-year purchase power agreement ("Hatch PPA") executed on August 31, 2010. Hatch is obligated, per the Hatch PPA, to sell its entire solar facility output with the transfer of associated RECs to EPE. The Hatch facility began commerical operation on July 8, 2011, and has committed to deliver a minimum amount of renewable energy with associated RECs during each year of the Hatch PPA. In December 2016, the Hatch facility completed a re-paneling of the entire plant to replace the CPV technology with SunPower panels. This re-paneling was performed at no cost to EPE.

The Hatch facility delivered 9,985 MWh of energy to EPE in 2024. EPE paid $119 per MWh with associated RECs for a total cost of $1,188,158 for 2024.

Please see **ATTACHMENT 2** for a copy of the monthly REC Transfer Forms from Hatch.

SOLAR ROADRUNNER, LLC PHOTOVOLTAIC RENEWABLE ENERGY WITH RENEWABLE ENERGY CERTIFICATES

1) Seller

Name:	Solar Roadrunner, LLC
Address:	1201 Fannin Houston, TX 77002
Telephone:	(713) 537-5134
E-mail:	kelley.huntley@nrg.com

2) Utility Owner

Name:	EPE
Address:	P.O. Box 982 El Paso, TX 79960
Telephone:	(915) 543-5752
E-mail:	powercontractadmin@epelectric.com

3-7) Transaction Information

Solar Roadrunner LLC operates a 20-MW solar PV facility located in Santa Teresa, New Mexico, and sells its entire solar PV system output and transfers all generated RECs to EPE under a 20-year Purchase Power Agreement dated June 4, 2010. The facility began commercial operation on August 29, 2011, and is committed to deliver a minimum amount of renewable energy and associated RECs during each year of the PPA.

The facility delivered 45,848 MWh of energy to EPE in 2023. EPE paid $127.45 per MWh with associated RECs for a total cost of $5,837,576 for 2024.

Please see **ATTACHMENT 3** for a copy of the monthly REC Transfer Forms from Solar Roadrunner LLC.

SUNE EPE1 AND EPE2 SOLAR PHOTOVOLTAIC RENEWABLE ENERGY WITH RENEWABLE ENERGY CERTIFICATES

1) Seller

Name:	SunE EPE1, LLC
Address:	330 Congress Street 6th Floor Boston, MA 02210
Telephone:	(617) 377-4316
E-mail:	brent.miller@longroadenergy.com

Name:	SunE EPE2, LLC
Address:	222 Second Avenue S. Suite 1900 Nashville, TN 37201
Telelphone:	(615) 760-4455
E-mail:	carla.dodd@siliconranch.com

2) Utility Owner

Name:	EPE
Address:	P.O. Box 982 El Paso, TX 79960
Telephone:	(915) 543-5752
E-mail:	powercontractadmin@epelectric.com

3-7) Transaction Information

In 2010, EPE entered into Purchase Power Agreements with SunE EPE1, LLC and SunE EPE2, LLC ("SunE PPAs") for two facilities located in New Mexico with total capacity of 22 MW. SunE EPE2 is a 12-MW facility located in Las Cruces, New Mexico, which came on-line on May 2, 2012. SunE EPE1 is a 10-MW facility located in Chaparral, New Mexico, which became operational on June 25, 2012. The two facilities sell their entire output and transfer all generated RECs to EPE under two 25-year PPAs, both dated November 8, 2010. Under the PPAs, a minimum amount of renewable energy and associated RECs is committed to being delivered from the Las Cruces and Chaparral facilities at a contract rate of $104.05 and $104.89 per MWh, respectively.

The combined facilities delivered to EPE 56,243 MWh of energy and associated RECs for a total cost of $5,876,596 in 2024.

Please see **ATTACHMENT 4** for a copy of the monthly REC Transfer Forms from SunE EPE1 and SunE EPE2.

MACHO SPRINGS SOLAR, LLC ("MACHO SPRINGS") PHOTOVOLTAIC RENEWABLE ENERGY WITH RENEWABLE ENERGY CERTIFICATES

1) Seller

Name:	Macho Springs Solar, LLC
Address:	Southern Power Company 3535 Colonnade Parkway Birmingham, AL 35243
Telephone:	(205) 992-0343
Fax:	(205) 992-7953
E-mail:	wbonner@southernco.com

2) Utility Owner

Name:	EPE
Address:	P.O. Box 982

El Paso, TX 79960
Telephone: (915) 543-5752
E-mail: powercontractadmin@epelectric.com

3-7) Transaction Information

In 2012, EPE entered into a Purchase Power Agreement with First Solar for a solar generation facility located adjacent to the Macho Springs Wind Farm in Luna County, New Mexico ("First Solar PPA"). In May 2014, a subsidiary of Southern Company, Southern Power, together with Turner Renewable Energy took over ownership of the plant. The facility is operated by First Solar, with power sold to EPE by Southern Power at the contact rate of $57.90 per MWh. The Macho Springs facility utilizes thin film PV technology on a ground mounted single axis tracking system, with a total capacity of 50 MWac. EPE obtained approval from the Commission for the First Solar PPA on May 1, 2013 in Case No. 13-00386-UT, and the generation facility began commercial operation on May 23, 2014. Macho Springs is utilized by EPE as a system resource and provides energy to customers in Texas and New Mexico. Energy (with associated RECs) from the facility is allocated monthly to New Mexico customers, with the associated cost for energy recovered through the Fuel and Purchased Power Cost Adjustment Clause ("FPPCAC") mechanism. As shown in Section F below regarding cost recovery under the RPS, no costs are associated with the RECs allocated to New Mexico from the Macho Springs facility.

The Macho Springs facility delivered 121,814 MWh of energy and associated RECs to EPE in 2024, and 22,409 MWh of that energy and associated RECs was allocated to New Mexico. The total energy costs in 2024 were $7,053,042, of which, $1,297,508 were allocated to New Mexico.

Please see **ATTACHMENT 5** for an accounting of the energy allocated for New Mexico customers from Macho Springs, with RECs applicable to EPE's RPS as approved by the Commission in Case No. 13-00223-UT.

FOUR PEAKS ENERGY, LLC'S CAMINO REAL LANDFILL GAS TO ENERGY FACILITY ("CRLEF") BIOMASS RENEWABLE GENERATION ENERGY AND RENEWABLE ENERGY CERTIFICATES

1) Seller

Name:	Four Peaks Energy, LLC
Address:	15820 Barclay Drive Sisters, Oregon 97759 Sited at: Camino Real Environmental Center 100 Camino Real Blvd. Sunland Park, NM 88063
Telephone:	(541) 549-8766
Fax:	(541) 549-8766
Email:	bbensonenergyneeringsolutions.com

2) Utility Owner

Name:	EPE
Address:	P.O. Box 982 El Paso, TX 79960
Telephone:	(915) 543-5752
E-mail:	powercontractadmin@epelectric.com

3-7) Transaction Information

The Four Peaks Energy, LLC CRLEF is a biogas Qualifying Facility ("QF"), and EPE purchases all net power produced by the facility under EPE's avoided cost tariff, Rate No. 16 – Purchased Power Service, on file with the Commission. EPE does not control output from CRLEF and, as a QF supplier, CRLEF has no delivery obligations. EPE purchased 14,668 MWh energy with associated RECs from CRLEF RECs in 2024. As of February 2025, CRLEF is longer operational.

See **ATTACHMENT 6** for a copy of the monthly REC Transfer Forms from the CRLEF and Monthly Outage Reports as required by the Commission's Final Order in Case No. 13-00223-UT.

EPE OWNED HOLLOMAN ATLAS SOLAR ARRAY- HOLLOMAN AIR FORCE BASE/RENEWABLE ENERGY CERTIFICATES

1) Customer

Name:	Holloman Air Force Base
Address:	HAFB Air Dev Ct. Holloman AFB NM 88330

2) Utility Owner

Name:	EPE
Address:	P.O. Box 982 El Paso, TX 79960
Telephone:	(915) 543-5752
E-mail:	powercontractadmin@epelectric.com

3-7) Transaction Information

In August of 2018, the 5-MW EPE-owned solar facility located at Holloman Air Force Base in Otero County began generating test energy; and, in October of 2018, the facility began commercial operation. In the final order approving the CCN in Case No. 15-00185-UT, the Commission stated that EPE shall make all RECs associated with energy produced by the facility available at no cost for application towards its RPS compliance. As mentioned in section IV on page 17 of the report, the facility generated a total of 3,268,905 kWh of renewable energy in 2024.

Please see **ATTACHMENT 7** for a copy of the REC documentation as well as the monthly invoices to Holloman from EPE.

BUENA VISTA ENERGY CENTER LLC RENEWABLE ENERGY CERTIFICATES

1) Customer

Name: NextEra Energy Resources, Buena Vista Energy Center, LLC
Address: 700 Universe Blvd.
Building LAW/JB
Juno Beach, FL 33408

2) Utility Owner

Name: EPE
Address: P.O. Box 982
El Paso, TX 79960
Telephone: (915) 543-5752
E-mail: powercontractadmin@epelectric.com

3-7) Transaction Information

In January 26, 2023, the 150 MW solar plus battery storage facility located in Otero, New Mexico began generating test energy; and, on July 11, 2023, the facility began commercial operation. The facility generated a total of 327,490,289 kWh of renewable energy in 2024. The BV1 facility delivered 327,490 MWh of energy and associated RECs to EPE in 2024 at a total energy cost of $7,967,798. Of this total amount, 134,986 MWh of generated energy and associated RECs was allocated to New Mexico. This includes the energy and RECs jurisdictionally allocated to New Mexico and the additional energy and RECs assigned to New Mexico customers under the BV 1 reassignment approved in Docket No. 23-00086-UT. The total energy cost to New Mexico was $3,284,905. Please see **ATTACHMENT 8** for a copy of the REC documentation as well as the monthly invoices to BV1 from EPE.

BUENA VISTA ENERGY CENTER 2 LLC RENEWABLE ENERGY CERTIFICATES

1) Customer

Name: NextEra Energy Resources, Buena Vista Energy Center, LLC
Address: 700 Universe Blvd.
Building LAW/JB
Juno Beach, FL 33408

2) Utility Owner

Name: EPE
Address: P.O. Box 982
El Paso, TX 79960
Telephone: (915) 543-5752
E-mail: powercontractadmin@epelectric.com

3-7) Transaction Information

In January 18, 2023, the 20 MW solar facility located in Otero, New Mexico, began generating test energy; and, on July 11, 2023, the facility began commercial operation. The facility generated a total of 60,938,351 kWh of renewable energy in 2024.

Please see **ATTACHMENT 9** for a copy of the REC documentation as well as the monthly invoices to BV2 from EPE.

AGGREGATED SOLAR/WIND DISTRIBUTED GENERATION RENEWABLE ENERGY CERTIFICATES FROM QUALIFYING FACILITY ("QF") PROGRAMS

1) Customers

Customer Installed DG QF RECs

2) Utility Owner/Purchaser

Name: EPE
Address: P.O. Box 982

El Paso, TX 79960
Telephone: (915) 543-5752
E-mail: powercontractadmin@epelectric.com

3-7) Transaction Information

In 2024, EPE purchased renewable energy from customer installed DG QFs and obtained 16,039 associated RECs, at a cost of $1,298,918 and an average price of $80.99 per MWh. These RECs are used to meet EPE's 2024 RPS. EPE's customer-sited DG REC program tariff was closed to new customers in 2017 and the last REC purchase contracts expired at the end of 2023.

Please see **ATTACHMENT 10** for a summary of EPE's 2024 Distributed Generation QF RECs.

D. RETIREMENT OF RECS TO MEET RPS COMPLIANCE

EPE supplied 20.08 percent of 2024 retail energy sales from renewable resources which equates to 100.38 percent of the actual 363,904 RECs needed to meet 20 percent RPS in 2024. At the time of filing this report, EPE has acquired 365,275 RECs for the 2024 Plan Year. EPE has not yet received 2,466 RECs in WREGIS.[2] EPE will retire the additional 2,466 RECs once they are available.

Table 4

	Source Type	2024 RECs Retired April 2025	Additional 2024 RECs to be Retired in 2025	Total 2024 RECs
2024 RPS RECs Retired	Wind	-	-	-
	Solar (a)	332,947	1,621	334,568
	Other	14,668	-	14,668
	DG (b)	15,194	845	16,039
	Total	**362,809**	**2,466**	**365,275**

[2] *See* Table 4.

E. APPROVED COST RECOVERY MECHANISMS

The Commission's Final Order in Case No. 17-00090-UT, approved EPE's original Rate No. 38 – Renewable Portfolio Standard Cost Rider, effective January 1, 2018 to recover EPE's Commission-approved procurement costs. With each subsequent plan, EPE has filed a revised RPS Cost Rider for Commission consideration and implemented a compliance RPS Cost Rider in accordance with Commission Orders.

Consistent with that practice, following issuance of a Final Order in Case No. 23-00086-UT, EPE filed Advice Notice No. 294 to implement EPE's Seventh Revised Rate No. 38, which became effective February 1, 2024. The RPS Cost Rider in effect during 2024 collected costs that EPE incurred for bundled energy and associated RECs, costs for RECs, and costs associated with registration of RECs with WREGIS as required by 17.9.572.13.E NMAC.

Table 5 below shows the costs associated with EPE's authorized 2024 procurement based on the approved recovery method.

Table 5

Contract	Source Type	RECs Acquired	RPS Cost Rider
Hatch Solar Energy Center 1 LLC	Solar	10,061	$ 1,188,158
Solar Roadrunner LLC	Solar	46,048	$ 5,837,576
SunE EPE 1, LLC & SunE EPE 2, LLC	Solar	56,694	$ 5,876,596
Macho Springs LLC	Solar	22,572	$ -
Four Peaks Energy, LLC - CRLEF	Biogas	14,668	$ -
Holloman Atlas Solar Array - HAFB	Solar	3,269	$ -
EPE's Distributed Generation	Various	16,039	$ 1,298,918
Buena Vista I		60,581	$ -
Buena Vista I Reallocation		74,405	$ 1,810,945
Buena Vista II		60,938	$ 1,409,504
WREGIS Costs			$ 2,160
Total		365,275	$ 17,423,857

V. ANNUAL STATUS REPORT OF THE CARNE PROJECT

Pursuant to the Commission Case No. 22-00093-UT Final Order (May 17, 2023), approving the Carne Project, EPE provides its annual report on the progress of the Carne Project.

a. Commission Final Order

In relevant part, Paragraph 11(i) through (iv) of the Recommended Decision adopted by that order requires this annual update to include:

> (i) updated Table IV as included in VM-1 of the amended Application (identified as Table I in this Recommended Decision); (ii) a year-end narrative (as of 12/31 annually); (iii) status and terms report, explaining any existing or potential project delays; and (iv) the related impact on EPE's plans to meet the RPS requirement in project years.

See Case No. 22-00093-UT Recommended Decision, Paragraph 11 and Ordering Paragraph C. The information required to be provided in this annual update mirrors the information provided in EPE's Quarterly Carne Status Reports filed in Case No. 23-00093-UT.

b. Updated Procurement Plan Year RECs and Costs

In compliance with Recommended Decision Paragraph 11(i), EPE provides the following Table 6, which updates EPE's Procurement Plan Year RECs and costs for Plan Year 2025 and Next Plan Year 2026.

/

/

/

/

/

/

Table: 6

PROCUREMENT PLAN YEAR RECS AND COSTS							
	2025			2026			COD
	(kWh)	RECs (MWh)	($)	(kWh)	RECs (MWh)	($)	Year
NRG [1]	45,817,324	45,817	5,839,418	45,588,237	45,588	5,810,221	2011
SunEdison [1]	56,410,547	56,411	5,916,902	56,128,494	56,128	5,887,318	2012
Macho Springs [2]	26,476,057	26,476	-	26,343,676	26,344	-	2014
Hatch [1]	10,010,889	10,011	1,191,296	9,960,834	9,961	1,185,339	2011
Holloman [2]	10,010,889	10,011	-	9,960,834	9,961	-	2018
Buena Vista Energy Center 1 Solar [2]	60,278,172	60,278	-	59,976,781	59,977	-	2023
Buena Vista Energy Center 2 [1]	60,633,659	60,634	1,402,457	60,330,491	60,330	1,395,444	2023
Carne Solar Project [1], [3]	-	-	-	331,952,500	331,953	9,945,297	2026
Carne Battery Project [1], [3]	-	-	-	-	-	7,143,500	2026
DG REC [4]	16,810,496	16,810	-	18,254,970	18,255	-	
New Mexico Community Solar [5]	10,010,889	10,011	-	49,804,171	49,804	-	
Planned Santa Teresa Solar Project [1], [6]	-	-	-	277,982,833	277,983	8,047,603	2026
Planned Santa Teresa Battery Project [1], [6]	-	-	-	-	-	4,532,500	2026
Proposed Reallocation of BV1 Solar [1], [7]	287,665,368	287,665	7,037,733	-	-	-	2023
Proposed Reallocation of Macho Springs [1], [8]	35,000,000	35,000	1,048,600	-	-	-	2014
CRLEF [2], [9]	2,139,981	2,140	-	-	-	-	2008
WREGIS	-	-	6,422	-	-	9,679	
Total	621,264,270	621,264	22,442,827	946,283,824	946,284	43,956,901	

Notes:

[1] The procurement cost include energy and REC, as well as capacity cost for the battery storage resources.

[2] There is zero RPS procurement cost since cost are recovered outside of the RPS cost rider; however, RECs are utilized for RPS.

[3] Carne Solar Project has an anticipated Commercial Operation Date of 2026.

[4] There is a zero RPS procurement costs for DG RECs purchased pursuant to Rate No.16.

[5] There is zero RPS procurement costs for New Mexico Community Solar since costs are recovered by customers participating in the Community Solar Program.

[6] Santa Teresa Project has partial energy in 2026 with an anticipated Commercial Operation Date of June 2026.

[7] Costs are associated with EPE's proposed reallocation of BV1 energy and RECs from TX to NM. It includes a RCT of $24.465/MWh.

[8] Costs are associated with EPE's proposed reallocation of Macho Spring energy and RECs from TX to NM. It includes a RCT of $29.96/MWh.

[9] As of February 2025 CRLEF will no longer be online; amount reflects two months of RECs.

Each version of this updated Table, included in EPE's quarterly status reports filed in Case No. 22-00093-UT, was based on EPE's best estimate projections. **Table 6**, above, includes updates consistent with Commission Case No. 24-00176-UT (October 18, 2024), including EPE's BV1 and Macho Springs Reassignment Proposals for the 2025 Plan Year and the planned new resource for 2026 (Santa Teresa). Consistent with the updates presented in EPE's REA Plan filing for Plan Year 2026 (filed concurrently with this Report), **Table 6** also reflects the impact of the

scheduled outage and updated COD for the Carne Project and the exclusion of the CRLEF facility starting in 2025.

Table 7, below, provides updated energy and REC projections using the same assumptions set forth in Table 6 above.

Table: 7

Year	2025	2026
Net New Mexico Energy System Forecast (MWh)	1,831,397	2,147,008
RPS Target	40%	40%
RPS Energy Requirement to meet REA (MWh)	732,559	858,803
RPS Energy Approved Resources	269,638	268,289
Planned 2025 NM All-Source (Carne Project)	-	331,953
Planned NM Allocated Resource (Santa Teresa)	-	277,983
Planned Community Solar	10,011	49,804
Proposed Reallocation of BV1	287,665	-
Proposed Reallocation of Macho Springs	35,000	-
Energy Purchased under Rate 16:		
Distributed Generation	16,810	18,255
Camino Real Landfill (CRLEF)	2,140	-
Planned Solar Energy Curtailments	(21,124)	(24,552)
Planned Round-Trip Efficiency Losses	(1,531)	(21,531)
Total RECs Available	598,609	900,201
Projected RPS %	32.7%	41.9%
Yearly Margin (Deficiency)	(133,950)	41,398

Table 7 shows that EPE is well positioned to exceed 40% RPS compliance in Plan Year 2026, using existing, planned, and new procurements presented in EPE's 2026 REA Plan, filed concurrently with this Report. However, as reflected in Table 7, the delay to operation of the Carne Project from August 2025 to February 2026, along with higher projected energy sales for 2025 and 2026 and exclusion of the CRLEF negatively impacts EPE's Plan to meet 40% RPS in 2025. The impact to EPE's Plan to meet 40% in 2025 and EPE's plan to address this projected shortfall are addressed in Section d below.

c. Year End Narrative and Status and Term Report

In compliance with Recommended Decision Paragraph 11(ii)-(iii), EPE provides the following status report on the Carne Project as of December 31, 2024, and Status and Term Report, explaining any existing or potential project delays.

As previously reported, the City of Las Cruces' appeal of the Commission Case No. 22-00093-UT Final Order approving the Carne Project, negatively impacted the timing of the Carne Project. This is because the parties' obligations under the PPA and ESA, were contingent upon a non-appealable NMPRC Final Order because of a "NMPRC Final Approval" condition precedent, defined in relevant part as receipt of a non-appealable final order. Additionally, the risk of the Court reversing and vacating the Commission order on appeal, and the standard 2 to 3 year time period for a court decision, put the project at risk, jeopardizing EPE's ability to use the resource for RPS compliance purposes. In order to move the Carne Project forward and to receive financing for the project while the appeal was pending, EPE and DESRI entered into a letter agreement dated April 26, 2024 reflecting EPE's agreements to waive the NMPRC Final Approval condition precedent and to purchase the project's energy irrespective of the court's disposition on appeal.

Because the delay caused by the City appeal qualified as a Force Majeure Event under the project's PPA and ESA, EPE and DESRI entered in a subsequent Letter Agreement dated April 30, 2024 agreeing to a new COD of August 31, 2025. A copy of the April 26 and April 30 Letter Agreements were attached to EPE's Annual Renewable Energy Portfolio Report for 2023 as Attachments 11 and 12.

The City's appeal was finally resolved in January 2025. After briefing and without oral arguments, on October 10, 2024 the Court issued a dispositional order affirming the Commission final order approving the project. On October 25, 2025, the City of Las Cruces filed a motion for

rehearing of the disposition order of affirmance which was denied by Court order issued January 3, 2025 finally resolving the appeal. The Court's Mandate to the Commission was issued on January 17, 2025.

EPE's 2024 Q3 and Q4 Carne Status Reports reported that the energization of the Carne Project would occur after the conclusion of an outage currently scheduled for the Fall of 2025. In EPE's 2025 Q1 Status Report, EPE reported it had evaluated the impact of the scheduled outage and that the expected COD form the Carne Project is now February 27, 2026. The modified Carne Project COD is memorialized in a Letter Agreement between EPE and DESRI dated January 31, 2025. The delay of up to 180 days is permitted under Section 3.6(b) of the Carne power purchase agreement and energy storage agreement and that letter agreement is attached to EPE's 2025 Q1 Status Report filed in Docket No. 22-00093-UT.

For specific information on work conducted by the parties under the PPA and Large Generator Interconnection Agreement, please see the Quarterly Status Reports filed in Docket No. 22-00093-UT.

d. <u>Impact on EPE's Plans to meet the RPS Requirement in Project Years</u>

As stated above, the projected delay in commercial operation of the Carne Project from August 2025 to February 2026, along with a higher projected sales forecast and the impact from removal of the CRLEF facility, creates a shortfall in the anticipated RECs available to meet EPE 40 percent RPS in Plan Years 2025 and 2026.

EPE estimates that it must procure an additional 133,950 RECs to be able to meet 40 % RPS obligations in Plan Year 2025, in addition to the approximately 35,000 RECs EPE proposed to purchase from Macho Springs at the Carne Project price of $29.96/MWh. EPE is evaluating options that may be available to make-up the total projected shortfall for 2025, including the

additional 35,000 MWh EPE proposed to purchase from Macho Springs, at a lower cost to EPE customers. EPE will file for necessary regulatory approvals once a temporary procurement has been identified. EPE will continue to update the Commission through the Carne quartely status reports filed in Docket 22-00093-UT.

Assuming that Carne meets the Febrary 2026 COD, EPE projects being well positioned to exceed 40% RPS using EPE's Commission-approved renewable energy portfolio and the new renewable energy resourse procurement (Santa Teresa Project) presented in EPE's 2026 Plan, filed concurrently with this report.

ATTACHMENT 1

Summary of EPE Renewable Requirements and Purchases
for 2024; 2024 WREGIS Compliance Report

SUMMARY OF RENEWABLE REQUIREMENTS AND PURCHASES FOR 2024 [1]

	Forecast MWh Sales	Actual MWh Sales	HATCH Solar (RECs)	SOLAR Roadrunner (RECs)	SUNE EPE 1&2 Solar (RECs)	MACHO Solar (RECs)	CRLEF[2] Biomass (RECs)	DG Solar/Wind (RECs)	HOLLOMAN Solar (RECs)	Buena Vista 1 Solar (RECs)	Buena Vista 2 Solar (RECs)	Total RECs
MWH to REC Weighting			1	1	1	1	1	1	1	1	1	
January	144,113	135,779	538.9	2,721.6	3,811.8	1,043.2	502.4	582.7	190.9	4,528.1	3,910.8	17,830.4
February	126,613	127,127	646.8	2,730.1	3,972.8	1,271.5	1,637.6	840.3	258.5	11,157.6	4,077.4	26,592.7
March	125,316	115,804	834.4	3,787.4	4,841.4	1,719.1	1,471.8	1,758.7	342.5	12,318.3	5,065.6	32,139.4
April	118,255	114,968	1,043.9	4,596.5	5,480.6	1,927.9	1,484.4	2,738.4	418.0	11,972.1	5,830.6	35,492.6
May	130,239	133,690	1,133.0	5,623.0	6,250.6	2,278.9	817.8	3,691.8	469.3	13,003.8	6,867.7	40,135.9
June	169,779	172,254	961.9	4,403.8	5,117.4	2,230.1	1,255.7	1,538.0	356.2	11,950.3	5,687.8	33,501.3
July	193,778	208,033	982.6	4,400.8	5,312.3	2,502.8	1,403.7	581.2	231.3	12,432.8	5,726.8	33,574.3
August	201,374	208,015	891.2	4,546.6	4,813.7	2,444.4	1,260.4	538.7	300.3	12,698.7	5,754.5	33,248.6
September	179,957	204,375	856.9	4,203.0	4,799.2	2,395.2	995.6	600.8	302.6	12,384.2	5,382.7	31,920.3
October	145,730	157,832	794.8	3,712.8	4,623.5	1,973.4	1,330.8	852.3	179.5	11,704.5	5,227.0	30,398.6
November	118,061	127,749	711.8	2,809.0	3,886.9	1,435.7	1,212.3	1,362.4	114.3	10,302.4	3,845.7	25,680.6
December	128,486	121,659	665.0	2,513.0	3,783.7	1,349.5	1,295.6	953.3	105.3	10,533.5	3,561.7	24,760.5
Total	1,781,700	1,827,284	10,061.2	46,047.6	56,694.0	22,571.7	14,668.3	16,038.9	3,268.9	134,986.3	60,938.4	365,275.2
Less NMSU	8,806	7,678										
Net Total	1,772,894	1,819,606										

2024 CATEGORY REC TOTAL:	WIND	SOLAR	OTHER	DG[4]	TOTAL	
2024 RECs Acquired & Carry-Over	0	334,568	14,668	16,039	365,275	
RECs Banked or Adjustments	0	(1,621)	(0)	(845)	(2,467)	
WREGIS Active RECs [3]	**0**	**332,947**	**14,668**	**15,194**	**362,809**	**- Registered at WREGIS and eligible for retirement**

	Forecast Sales	Actual Sales	20% RPS Requirement
2024 Total MWh	1,772,894	1,819,606	**363,904**

Notes:
1. One (1) REC is equivalent to purchasing one (1) MWh of energy generated from a renewable energy resource.
2. CRLEF weighting is one-for-one effective beginning 2019.
3. "Active RECs" are RECs that have been acquired, registered and certified in WREGIS.

Account	Account ID	WREGIS GU ID	Unit Name	Facility Name	Fuel Type	Vintage	Generatio	Generation End Date	Generator	Eligility	Quantity (RECs)	Serial Numbers	New Mexico
NM RPS Active	9aa7ddf2-4ffc	W1784	Four Peaks - Camino Real Landfill Biomass Project	Four Peaks	Biogas	1/1/2024	1/1/2024	1/31/2024	NM	N/A	502	1784-NM-01-2024-FC9E041F-1 to 502	No
NM RPS Active	9aa7ddf2-4ffc	W15055	Buena Vista Energy Center, LLC (BV II)	Buena Vista Energy Center, LLC	Solar	1/1/2024	1/1/2024	1/31/2024	NM	N/A	4204	15055-NM-01-2024-1D8C0DF0-1 to 4204	No
NM RPS Active	9aa7ddf2-4ffc	W2141	NRG Solar Roadrunner - Roadrunner Solar	NRG Solar Roadrunner	Solar	1/1/2024	1/1/2024	1/31/2024	NM	N/A	2722	2141-NM-01-2024-50AF2D98-1 to 2722	No
NM RPS Active	9aa7ddf2-4ffc	W2169	Hatch Solar Energy Center I, LLC - Hatch Solar Energy Center I, LLC	Hatch Solar Energy Center I, LLC	Solar	1/1/2024	1/1/2024	1/31/2024	NM	SMUD	539	2169-NM-01-2024-899A5C79-1 to 539	No
NM RPS Active	9aa7ddf2-4ffc	W7202	Holloman Atlas Solar Array - Holloman Air Force Base HAFB	Holloman Atlas Solar Array	Solar	1/1/2024	1/1/2024	1/31/2024	NM	N/A	191	7202-NM-01-2024-6ADBCF86-1 to 191	No
NM RPS Active	9aa7ddf2-4ffc	W2797	EPE - Chaparral - SunE EPE1, LLC	EPE - Chaparral	Solar	1/1/2024	1/1/2024	1/31/2024	NM	N/A	1924	2797-NM-01-2024-4BBEF3FF-1 to 1924	No
NM RPS Active	9aa7ddf2-4ffc	W2637	SunE EPE2, LLC - EPE - Las Cruces Industrial	SunE EPE2, LLC	Solar	1/1/2024	1/1/2024	1/31/2024	NM	N/A	938	2637-NM-01-2024-3B78BCCE-1 to 938	No
NM RPS Active	9aa7ddf2-4ffc	W4143	Macho Springs Solar - Macho Springs Solar	Macho Springs Solar	Solar	1/1/2024	1/1/2024	1/31/2024	NM	CEC - Conl	4911	4143-NM-01-2024-EA0D0CCF-1 to 4911	No
NM RPS Active	9aa7ddf2-4ffc	W15054	Buena Vista Energy Center, LLC (BV I)	Buena Vista Energy Center, LLC	Solar	1/1/2024	1/1/2024	1/31/2024	NM	N/A	21022	15054-NM-01-2024-1D8C0DF0-4205 to 25226	No
NM RPS Active	9aa7ddf2-4ffc	W2141	NRG Solar Roadrunner - Roadrunner Solar	NRG Solar Roadrunner	Solar	2/1/2024	2/1/2024	2/29/2024	NM	N/A	2730	2141-NM-02-2024-06FBC2BC-1 to 2730	No
NM RPS Active	9aa7ddf2-4ffc	W15054	Buena Vista Energy Center, LLC (BV I)	Buena Vista Energy Center, LLC	Solar	2/1/2024	2/1/2024	2/29/2024	NM	N/A	22041	15054-NM-02-2024-C4979898-4410 to 26450	No
NM RPS Active	9aa7ddf2-4ffc	W7202	Holloman Atlas Solar Array - Holloman Air Force Base HAFB	Holloman Atlas Solar Array	Solar	2/1/2024	2/1/2024	2/29/2024	NM	N/A	259	7202-NM-02-2024-F4420460-1 to 259	No
NM RPS Active	9aa7ddf2-4ffc	W1784	Four Peaks - Camino Real Landfill Biomass Project	Four Peaks	Biogas	2/1/2024	2/1/2024	2/29/2024	NM	N/A	1638	1784-NM-02-2024-DB295F9F-1 to 1638	No
NM RPS Active	9aa7ddf2-4ffc	W2169	Hatch Solar Energy Center I, LLC - Hatch Solar Energy Center I, LLC	Hatch Solar Energy Center I, LLC	Solar	2/1/2024	2/1/2024	2/29/2024	NM	N/A	645	2169-NM-02-2024-B237F3D9-1 to 645	No
NM RPS Active	9aa7ddf2-4ffc	W2797	EPE - Chaparral - SunE EPE1, LLC	EPE - Chaparral	Solar	2/1/2024	2/1/2024	2/29/2024	NM	N/A	1875	2797-NM-02-2024-6547F833-1 to 1875	No
NM RPS Active	9aa7ddf2-4ffc	W2637	SunE EPE2, LLC - EPE - Las Cruces Industrial	SunE EPE2, LLC	Solar	2/1/2024	2/1/2024	2/29/2024	NM	N/A	2093	2637-NM-02-2024-4C094B12-1 to 2093	No
NM RPS Active	9aa7ddf2-4ffc	W15055	Buena Vista Energy Center, LLC (BV II)	Buena Vista Energy Center, LLC	Solar	2/1/2024	2/1/2024	2/29/2024	NM	N/A	4409	15055-NM-02-2024-C4979898-1 to 4409	No
NM RPS Active	9aa7ddf2-4ffc	W4143	Macho Springs Solar - Macho Springs Solar	Macho Springs Solar	Solar	2/1/2024	2/1/2024	2/29/2024	NM	CEC - Conl	6474	4143-NM-02-2024-E9B46AAF-1 to 6474	No
NM RPS Active	9aa7ddf2-4ffc	W1784	Four Peaks - Camino Real Landfill Biomass Project	Four Peaks	Biogas	3/1/2024	3/1/2024	3/31/2024	NM	N/A	1472	1784-NM-03-2024-2DAB55A3-1 to 1472	No
NM RPS Active	9aa7ddf2-4ffc	W7202	Holloman Atlas Solar Array - Holloman Air Force Base HAFB	Holloman Atlas Solar Array	Solar	3/1/2024	3/1/2024	3/31/2024	NM	N/A	342	7202-NM-03-2024-E7DAEBED-1 to 342	No
NM RPS Active	9aa7ddf2-4ffc	W15054	Buena Vista Energy Center, LLC (BV I)	Buena Vista Energy Center, LLC	Solar	3/1/2024	3/1/2024	3/31/2024	NM	N/A	28534	15054-NM-03-2024-5277FAAC-5708 to 34241	No
NM RPS Active	9aa7ddf2-4ffc	W2797	EPE - Chaparral - SunE EPE1, LLC	EPE - Chaparral	Solar	3/1/2024	3/1/2024	3/31/2024	NM	N/A	2280	2797-NM-03-2024-A1085474-1 to 2280	No
NM RPS Active	9aa7ddf2-4ffc	W2169	Hatch Solar Energy Center I, LLC - Hatch Solar Energy Center I, LLC	Hatch Solar Energy Center I, LLC	Solar	3/1/2024	3/1/2024	3/31/2024	NM	N/A	835	2169-NM-03-2024-7C914568-1 to 835	No
NM RPS Active	9aa7ddf2-4ffc	W2141	NRG Solar Roadrunner - Roadrunner Solar	NRG Solar Roadrunner	Solar	3/1/2024	3/1/2024	3/31/2024	NM	N/A	3788	2141-NM-03-2024-C24855A3-1 to 3788	No
NM RPS Active	9aa7ddf2-4ffc	W2637	SunE EPE2, LLC - EPE - Las Cruces Industrial	SunE EPE2, LLC	Solar	3/1/2024	3/1/2024	3/31/2024	NM	N/A	2554	2637-NM-03-2024-7D6B9F43-1 to 2554	No
NM RPS Active	9aa7ddf2-4ffc	W15055	Buena Vista Energy Center, LLC (BV II)	Buena Vista Energy Center, LLC	Solar	3/1/2024	3/1/2024	3/31/2024	NM	N/A	5707	15055-NM-03-2024-5277FAAC-1 to 5707	No
NM RPS Active	9aa7ddf2-4ffc	W4143	Macho Springs Solar - Macho Springs Solar	Macho Springs Solar	Solar	3/1/2024	3/1/2024	3/31/2024	NM	CEC - Conl	9029	4143-NM-03-2024-F84963CD-1 to 9029	No
NM RPS Active	9aa7ddf2-4ffc	W7202	Holloman Atlas Solar Array - Holloman Air Force Base HAFB	Holloman Atlas Solar Array	Solar	4/1/2024	4/1/2024	4/30/2024	NM	N/A	418	7202-NM-04-2024-5D2C8C4F-1 to 418	No
NM RPS Active	9aa7ddf2-4ffc	W4143	Macho Springs Solar - Macho Springs Solar	Macho Springs Solar	Solar	4/1/2024	4/1/2024	4/30/2024	NM	CEC - Conl	10694	4143-NM-04-2024-E397426F-1 to 10694	No
NM RPS Active	9aa7ddf2-4ffc	W2169	Hatch Solar Energy Center I, LLC - Hatch Solar Energy Center I, LLC	Hatch Solar Energy Center I, LLC	Solar	4/1/2024	4/1/2024	4/30/2024	NM	N/A	1044	2169-NM-04-2024-C31DB9BB-1 to 1044	No
NM RPS Active	9aa7ddf2-4ffc	W15054	Buena Vista Energy Center, LLC (BV I)	Buena Vista Energy Center, LLC	Solar	4/1/2024	4/1/2024	4/30/2024	NM	N/A	28932	15054-NM-04-2024-695A21E0-5787 to 34718	No
NM RPS Active	9aa7ddf2-4ffc	W15055	Buena Vista Energy Center, LLC (BV II)	Buena Vista Energy Center, LLC	Solar	4/1/2024	4/1/2024	4/30/2024	NM	N/A	5786	15055-NM-04-2024-695A21E0-1 to 5786	No
NM RPS Active	9aa7ddf2-4ffc	W1784	Four Peaks - Camino Real Landfill Biomass Project	Four Peaks	Biogas	4/1/2024	4/1/2024	4/30/2024	NM	N/A	1484	1784-NM-04-2024-4F14B146-1 to 1484	No
NM RPS Active	9aa7ddf2-4ffc	W2637	SunE EPE2, LLC - EPE - Las Cruces Industrial	SunE EPE2, LLC	Solar	4/1/2024	4/1/2024	4/30/2024	NM	N/A	2902	2637-NM-04-2024-28268D71-1 to 2902	No
NM RPS Active	9aa7ddf2-4ffc	W2141	NRG Solar Roadrunner - Roadrunner Solar	NRG Solar Roadrunner	Solar	4/1/2024	4/1/2024	4/30/2024	NM	N/A	4596	2141-NM-04-2024-F2797D87-1 to 4596	No
NM RPS Active	9aa7ddf2-4ffc	W2797	EPE - Chaparral - SunE EPE1, LLC	EPE - Chaparral	Solar	4/1/2024	4/1/2024	4/30/2024	NM	N/A	2572	2797-NM-04-2024-30B51BBC-1 to 2572	No
NM RPS Active	9aa7ddf2-4ffc	W4143	Macho Springs Solar - Macho Springs Solar	Macho Springs Solar	Solar	5/1/2024	5/1/2024	5/31/2024	NM	CEC - Conl	13743	4143-NM-05-2024-CC373667-1 to 13743	No
NM RPS Active	9aa7ddf2-4ffc	W7202	Holloman Atlas Solar Array - Holloman Air Force Base HAFB	Holloman Atlas Solar Array	Solar	5/1/2024	5/1/2024	5/31/2024	NM	N/A	470	7202-NM-05-2024-0BD3099C-1 to 470	No
NM RPS Active	9aa7ddf2-4ffc	W2637	SunE EPE2, LLC - EPE - Las Cruces Industrial	SunE EPE2, LLC	Solar	5/1/2024	5/1/2024	5/31/2024	NM	N/A	3232	2637-NM-05-2024-30F9A0E8-1 to 3232	No
NM RPS Active	9aa7ddf2-4ffc	W2169	Hatch Solar Energy Center I, LLC - Hatch Solar Energy Center I, LLC	Hatch Solar Energy Center I, LLC	Solar	5/1/2024	5/1/2024	5/31/2024	NM	N/A	1133	2169-NM-05-2024-840D31C7-1 to 1133	No
NM RPS Active	9aa7ddf2-4ffc	W2141	NRG Solar Roadrunner - Roadrunner Solar	NRG Solar Roadrunner	Solar	5/1/2024	5/1/2024	5/31/2024	NM	N/A	5623	2141-NM-05-2024-E5190469-1 to 5623	No
NM RPS Active	9aa7ddf2-4ffc	W15054	Buena Vista Energy Center, LLC (BV I)	Buena Vista Energy Center, LLC	Solar	5/1/2024	5/1/2024	5/31/2024	NM	CEC - Conl	37081	15054-NM-05-2024-5C85D4A7-7417 to 44497	No
NM RPS Active	9aa7ddf2-4ffc	W1784	Four Peaks - Camino Real Landfill Biomass Project	Four Peaks	Biogas	5/1/2024	5/1/2024	5/31/2024	NM	N/A	818	1784-NM-05-2024-A8C6D40B-1 to 818	No
NM RPS Active	9aa7ddf2-4ffc	W15055	Buena Vista Energy Center, LLC (BV II)	Buena Vista Energy Center, LLC	Solar	5/1/2024	5/1/2024	5/31/2024	NM	N/A	7416	15055-NM-05-2024-5C85D4A7-1 to 7416	No
NM RPS Active	9aa7ddf2-4ffc	W2797	EPE - Chaparral - SunE EPE1, LLC	EPE - Chaparral	Solar	5/1/2024	5/1/2024	5/31/2024	NM	N/A	3010	2797-NM-05-2024-B835F204-1 to 3010	No
NM RPS Active	9aa7ddf2-4ffc	W2169	Hatch Solar Energy Center I, LLC - Hatch Solar Energy Center I, LLC	Hatch Solar Energy Center I, LLC	Solar	6/1/2024	6/1/2024	6/30/2024	NM	N/A	961	2169-NM-06-2024-FDCB059E-1 to 961	No
NM RPS Active	9aa7ddf2-4ffc	W2637	SunE EPE2, LLC - EPE - Las Cruces Industrial	SunE EPE2, LLC	Solar	6/1/2024	6/1/2024	6/30/2024	NM	N/A	2719	2637-NM-06-2024-84ABA345-1 to 2719	No
NM RPS Active	9aa7ddf2-4ffc	W15054	Buena Vista Energy Center, LLC (BV I)	Buena Vista Energy Center, LLC	Solar	6/1/2024	6/1/2024	6/30/2024	NM	CEC - Conl	18088	15054-NM-06-2024-8C3D6ED8-16920 to 35007	No
NM RPS Active	9aa7ddf2-4ffc	W4143	Macho Springs Solar - Macho Springs Solar	Macho Springs Solar	Solar	6/1/2024	6/1/2024	6/30/2024	NM	CEC - Conl	2230	4143-NM-06-2024-B4AF5FAA-1 to 2230	No
NM RPS Active	9aa7ddf2-4ffc	W15054	Buena Vista Energy Center, LLC (BV I)	Buena Vista Energy Center, LLC	Solar	6/1/2024	6/1/2024	6/30/2024	NM	CEC - Conl	11084	15054-NM-06-2024-8C3D6ED8-5836 to 16919	No
NM RPS Active	9aa7ddf2-4ffc	W1784	Four Peaks - Camino Real Landfill Biomass Project	Four Peaks	Biogas	6/1/2024	6/1/2024	6/30/2024	NM	N/A	1256	1784-NM-06-2024-1863C825-1 to 1256	No
NM RPS Active	9aa7ddf2-4ffc	W2141	NRG Solar Roadrunner - Roadrunner Solar	NRG Solar Roadrunner	Solar	6/1/2024	6/1/2024	6/30/2024	NM	N/A	4404	2141-NM-06-2024-7A65A2E2-1 to 4404	No
NM RPS Active	9aa7ddf2-4ffc	W2797	EPE - Chaparral - SunE EPE1, LLC	EPE - Chaparral	Solar	6/1/2024	6/1/2024	6/30/2024	NM	N/A	2392	2797-NM-06-2024-7E27A2C3-1 to 2392	No
NM RPS Active	9aa7ddf2-4ffc	W7202	Holloman Atlas Solar Array - Holloman Air Force Base HAFB	Holloman Atlas Solar Array	Solar	6/1/2024	6/1/2024	6/30/2024	NM	N/A	356	7202-NM-06-2024-BDBBC01B-1 to 356	No
NM RPS Active	9aa7ddf2-4ffc	W15055	Buena Vista Energy Center, LLC (BV II)	Buena Vista Energy Center, LLC	Solar	6/1/2024	6/1/2024	6/30/2024	NM	N/A	5835	15055-NM-06-2024-8C3D6ED8-1 to 5835	No

Account	Account ID	WREGIS GU ID	Unit Name	Facility Name	Fuel Type	Vintage	Generatio	Generation End Date	Generator	Eligility	Quantity (RECs)	Serial Numbers	New Mexico
NM RPS Active	9aa7ddf2-4ffc	W15055	Buena Vista Energy Center, LLC (BV II)	Buena Vista Energy Center, LLC	Solar	7/1/2024	7/1/2024	7/31/2024	NM	N/A	6091	15055-NM-07-2024-6629B5B9-1 to 6091	No
NM RPS Active	9aa7ddf2-4ffc	W7202	Holloman Atlas Solar Array - Holloman Air Force Base HAFB	Holloman Atlas Solar Array	Solar	7/1/2024	7/1/2024	7/31/2024	NM	N/A	231	7202-NM-07-2024-713BADCB-1 to 231	No
NM RPS Active	9aa7ddf2-4ffc	W1784	Four Peaks - Camino Real Landfill Biomass Project	Four Peaks	Biogas	7/1/2024	7/1/2024	7/31/2024	NM	N/A	1404	1784-NM-07-2024-D12CF6A1-1 to 1404	No
NM RPS Active	9aa7ddf2-4ffc	W15054	Buena Vista Energy Center, LLC (BV I)	Buena Vista Energy Center, LLC	Solar	7/1/2024	7/1/2024	7/31/2024	NM	CEC - Cont	12367	15054-NM-07-2024-6629B5B9-6092 to 18458	No
NM RPS Active	9aa7ddf2-4ffc	W2797	EPE - Chaparral - SunE EPE1, LLC	EPE - Chaparral	Solar	7/1/2024	7/1/2024	7/31/2024	NM	N/A	2504	2797-NM-07-2024-D6C59271-1 to 2504	No
NM RPS Active	9aa7ddf2-4ffc	W2169	Hatch Solar Energy Center I, LLC - Hatch Solar Energy Center I, LLC	Hatch Solar Energy Center I, LLC	Solar	7/1/2024	7/1/2024	7/31/2024	NM	N/A	983	2169-NM-07-2024-EA4321B4-1 to 983	No
NM RPS Active	9aa7ddf2-4ffc	W4143	Macho Springs Solar - Macho Springs Solar	Macho Springs Solar	Solar	7/1/2024	7/1/2024	7/31/2024	NM	CEC - Cont	2503	4143-NM-07-2024-1C054D63-1 to 2503	No
NM RPS Active	9aa7ddf2-4ffc	W2637	SunE EPE2, LLC - EPE - Las Cruces Industrial	SunE EPE2, LLC	Solar	7/1/2024	7/1/2024	7/31/2024	NM	N/A	2457	2637-NM-07-2024-953D9629-1 to 2457	No
NM RPS Active	9aa7ddf2-4ffc	W2141	NRG Solar Roadrunner - Roadrunner Solar	NRG Solar Roadrunner	Solar	7/1/2024	7/1/2024	7/31/2024	NM	N/A	4401	2141-NM-07-2024-03882441-1 to 4401	No
NM RPS Active	9aa7ddf2-4ffc	W2141	NRG Solar Roadrunner - Roadrunner Solar	NRG Solar Roadrunner	Solar	8/1/2024	8/1/2024	8/31/2024	NM	N/A	4546	2141-NM-08-2024-BF34AB08-1 to 4546	No
NM RPS Active	9aa7ddf2-4ffc	W2637	SunE EPE2, LLC - EPE - Las Cruces Industrial	SunE EPE2, LLC	Solar	8/1/2024	8/1/2024	8/31/2024	NM	N/A	2390	2637-NM-08-2024-66153A72-1 to 2390	No
NM RPS Active	9aa7ddf2-4ffc	W7202	Holloman Atlas Solar Array - Holloman Air Force Base HAFB	Holloman Atlas Solar Array	Solar	8/1/2024	8/1/2024	8/31/2024	NM	N/A	300	7202-NM-08-2024-089A0FF4-1 to 300	No
NM RPS Active	9aa7ddf2-4ffc	W1784	Four Peaks - Camino Real Landfill Biomass Project	Four Peaks	Biogas	8/1/2024	8/1/2024	8/31/2024	NM	N/A	1260	1784-NM-08-2024-2F5C72E2-1 to 1260	No
NM RPS Active	9aa7ddf2-4ffc	W15054	Buena Vista Energy Center, LLC (BV I)	Buena Vista Energy Center, LLC	Solar	8/1/2024	8/1/2024	8/31/2024	NM	CEC - Cont	12614	15054-NM-08-2024-798D8353-6211 to 18824	No
NM RPS Active	9aa7ddf2-4ffc	W2797	EPE - Chaparral - SunE EPE1, LLC	EPE - Chaparral	Solar	8/1/2024	8/1/2024	8/31/2024	NM	N/A	2360	2797-NM-08-2024-DA1AE8C7-1 to 2360	No
NM RPS Active	9aa7ddf2-4ffc	W15055	Buena Vista Energy Center, LLC (BV II)	Buena Vista Energy Center, LLC	Solar	8/1/2024	8/1/2024	8/31/2024	NM	N/A	6210	15055-NM-08-2024-798D8353-1 to 6210	No
NM RPS Active	9aa7ddf2-4ffc	W2169	Hatch Solar Energy Center I, LLC - Hatch Solar Energy Center I, LLC	Hatch Solar Energy Center I, LLC	Solar	8/1/2024	8/1/2024	8/31/2024	NM	N/A	891	2169-NM-08-2024-69BFDA18-1 to 891	No
NM RPS Active	9aa7ddf2-4ffc	W4143	Macho Springs Solar - Macho Springs Solar	Macho Springs Solar	Solar	8/1/2024	8/1/2024	8/31/2024	NM	CEC - Cont	2444	4143-NM-08-2024-E285E6C5-1 to 2444	No
NM RPS Active	9aa7ddf2-4ffc	W7202	Holloman Atlas Solar Array - Holloman Air Force Base HAFB	Holloman Atlas Solar Array	Solar	9/1/2024	9/1/2024	9/30/2024	NM	N/A	303	7202-NM-09-2024-6E242D4F-1 to 303	No
NM RPS Active	9aa7ddf2-4ffc	W15054	Buena Vista Energy Center, LLC (BV I)	Buena Vista Energy Center, LLC	Solar	9/1/2024	9/1/2024	9/30/2024	NM	CEC - Cont	12296	15054-NM-09-2024-AABD282A-5856 to 18151	No
NM RPS Active	9aa7ddf2-4ffc	W1784	Four Peaks - Camino Real Landfill Biomass Project	Four Peaks	Biogas	9/1/2024	9/1/2024	9/30/2024	NM	N/A	996	1784-NM-09-2024-3485C49F-1 to 996	No
NM RPS Active	9aa7ddf2-4ffc	W4143	Macho Springs Solar - Macho Springs Solar	Macho Springs Solar	Solar	9/1/2024	9/1/2024	9/30/2024	NM	CEC - Cont	2395	4143-NM-09-2024-64C13506-1 to 2395	No
NM RPS Active	9aa7ddf2-4ffc	W2141	NRG Solar Roadrunner - Roadrunner Solar	NRG Solar Roadrunner	Solar	9/1/2024	9/1/2024	9/30/2024	NM	N/A	4203	2141-NM-09-2024-7B038612-1 to 4203	No
NM RPS Active	9aa7ddf2-4ffc	W2797	EPE - Chaparral - SunE EPE1, LLC	EPE - Chaparral	Solar	9/1/2024	9/1/2024	9/30/2024	NM	N/A	2272	2797-NM-09-2024-2A135805-1 to 2272	No
NM RPS Active	9aa7ddf2-4ffc	W15055	Buena Vista Energy Center, LLC (BV II)	Buena Vista Energy Center, LLC	Solar	9/1/2024	9/1/2024	9/30/2024	NM	N/A	5855	15055-NM-09-2024-AABD282A-1 to 5855	No
NM RPS Active	9aa7ddf2-4ffc	W2637	SunE EPE2, LLC - EPE - Las Cruces Industrial	SunE EPE2, LLC	Solar	9/1/2024	9/1/2024	9/30/2024	NM	N/A	2395	2637-NM-09-2024-353F8F23-1 to 2395	No
NM RPS Active	9aa7ddf2-4ffc	W2169	Hatch Solar Energy Center I, LLC - Hatch Solar Energy Center I, LLC	Hatch Solar Energy Center I, LLC	Solar	9/1/2024	9/1/2024	9/30/2024	NM	N/A	857	2169-NM-09-2024-24AEFAE7-1 to 857	No
NM RPS Active	9aa7ddf2-4ffc	W2141	NRG Solar Roadrunner - Roadrunner Solar	NRG Solar Roadrunner	Solar	########	########	10/31/2024	NM	N/A	3713	2141-NM-10-2024-C045AA13-1 to 3713	No
NM RPS Active	9aa7ddf2-4ffc	W4143	Macho Springs Solar - Macho Springs Solar	Macho Springs Solar	Solar	########	########	10/31/2024	NM	CEC - Cont	10864	4143-NM-10-2024-BAE1CE5F-1 to 10864	No
NM RPS Active	9aa7ddf2-4ffc	W2797	EPE - Chaparral - SunE EPE1, LLC	EPE - Chaparral	Solar	########	########	10/31/2024	NM	N/A	2250	2797-NM-10-2024-888B475C-1 to 2250	No
NM RPS Active	9aa7ddf2-4ffc	W2637	SunE EPE2, LLC - EPE - Las Cruces Industrial	SunE EPE2, LLC	Solar	########	########	10/31/2024	NM	N/A	2296	2637-NM-10-2024-84DB804E-1 to 2296	No
NM RPS Active	9aa7ddf2-4ffc	W15054	Buena Vista Energy Center, LLC (BV I)	Buena Vista Energy Center, LLC	Solar	########	########	10/31/2024	NM	CEC - Cont	25115	15054-NM-10-2024-4130A348-5405 to 30519	No
NM RPS Active	9aa7ddf2-4ffc	W15055	Buena Vista Energy Center, LLC (BV II)	Buena Vista Energy Center, LLC	Solar	########	########	10/31/2024	NM	N/A	5404	15055-NM-10-2024-4130A348-1 to 5404	No
NM RPS Active	9aa7ddf2-4ffc	W1784	Four Peaks - Camino Real Landfill Biomass Project	Four Peaks	Biogas	########	########	10/31/2024	NM	N/A	1330	1784-NM-10-2024-B7234C23-1 to 1330	No
NM RPS Active	9aa7ddf2-4ffc	W7202	Holloman Atlas Solar Array - Holloman Air Force Base HAFB	Holloman Atlas Solar Array	Solar	########	########	10/31/2024	NM	N/A	179	7202-NM-10-2024-486797B8-1 to 179	No
NM RPS Active	9aa7ddf2-4ffc	W2169	Hatch Solar Energy Center I, LLC - Hatch Solar Energy Center I, LLC	Hatch Solar Energy Center I, LLC	Solar	########	########	10/31/2024	NM	N/A	795	2169-NM-10-2024-1F150CE8-1 to 795	No
NM RPS Active	9aa7ddf2-4ffc	W2169	Hatch Solar Energy Center I, LLC - Hatch Solar Energy Center I, LLC	Hatch Solar Energy Center I, LLC	Solar	########	########	11/30/2024	NM	N/A	712	2169-NM-11-2024-0BE6CD0A-1 to 712	No
NM RPS Active	9aa7ddf2-4ffc	W2141	NRG Solar Roadrunner - Roadrunner Solar	NRG Solar Roadrunner	Solar	########	########	11/30/2024	NM	N/A	2809	2141-NM-11-2024-438580EA-1 to 2809	No
NM RPS Active	9aa7ddf2-4ffc	W15055	Buena Vista Energy Center, LLC (BV II)	Buena Vista Energy Center, LLC	Solar	########	########	11/30/2024	NM	N/A	3945	15055-NM-11-2024-FEA4D347-1 to 3945	No
NM RPS Active	9aa7ddf2-4ffc	W1784	Four Peaks - Camino Real Landfill Biomass Project	Four Peaks	Biogas	########	########	11/30/2024	NM	N/A	1213	1784-NM-11-2024-CB236EF9-1 to 1213	No
NM RPS Active	9aa7ddf2-4ffc	W4143	Macho Springs Solar - Macho Springs Solar	Macho Springs Solar	Solar	########	########	11/30/2024	NM	CEC - Cont	8044	4143-NM-11-2024-1F39668A-1 to 8044	No
NM RPS Active	9aa7ddf2-4ffc	W2637	SunE EPE2, LLC - EPE - Las Cruces Industrial	SunE EPE2, LLC	Solar	########	########	11/30/2024	NM	N/A	1994	2637-NM-11-2024-7751285C-1 to 1994	No
NM RPS Active	9aa7ddf2-4ffc	W15054	Buena Vista Energy Center, LLC (BV I)	Buena Vista Energy Center, LLC	Solar	########	########	11/30/2024	NM	CEC - Cont	19723	15054-NM-11-2024-FEA4D347-3946 to 23668	No
NM RPS Active	9aa7ddf2-4ffc	W7202	Holloman Atlas Solar Array - Holloman Air Force Base HAFB	Holloman Atlas Solar Array	Solar	########	########	11/30/2024	NM	N/A	115	7202-NM-11-2024-B96A6716-1 to 115	No
NM RPS Active	9aa7ddf2-4ffc	W2797	EPE - Chaparral - SunE EPE1, LLC	EPE - Chaparral	Solar	########	########	11/30/2024	NM	N/A	1887	2797-NM-11-2024-177F17C6-1 to 1887	No
NM RPS Active	9aa7ddf2-4ffc	W1784	Four Peaks - Camino Real Landfill Biomass Project	Four Peaks	Biogas	########	########	12/31/2024	NM	N/A	1295	1784-NM-12-2024-8FB90CD6-1 to 1295	No
NM RPS Active	9aa7ddf2-4ffc	W4143	Macho Springs Solar - Macho Springs Solar	Macho Springs Solar	Solar	########	########	12/31/2024	NM	CEC - Cont	7054	4143-NM-12-2024-17079C12-1 to 7054	No
NM RPS Active	9aa7ddf2-4ffc	W2141	NRG Solar Roadrunner - Roadrunner Solar	NRG Solar Roadrunner	Solar	########	########	12/31/2024	NM	N/A	2513	2141-NM-12-2024-94D01587-1 to 2513	No
NM RPS Active	9aa7ddf2-4ffc	W2169	Hatch Solar Energy Center I, LLC - Hatch Solar Energy Center I, LLC	Hatch Solar Energy Center I, LLC	Solar	########	########	12/31/2024	NM	N/A	665	2169-NM-12-2024-8187C125-1 to 665	No
NM RPS Active	9aa7ddf2-4ffc	W15054	Buena Vista Energy Center, LLC (BV I)	Buena Vista Energy Center, LLC	Solar	########	########	12/31/2024	NM	CEC - Cont	19388	15054-NM-12-2024-A9647394-3878 to 23265	No
NM RPS Active	9aa7ddf2-4ffc	W15055	Buena Vista Energy Center, LLC (BV II)	Buena Vista Energy Center, LLC	Solar	########	########	12/31/2024	NM	N/A	3877	15055-NM-12-2024-A9647394-1 to 3877	No
NM RPS Active	9aa7ddf2-4ffc	W2637	SunE EPE2, LLC - EPE - Las Cruces Industrial	SunE EPE2, LLC	Solar	########	########	12/31/2024	NM	N/A	1951	2637-NM-12-2024-8910AD57-1 to 1951	No
NM RPS Active	9aa7ddf2-4ffc	W2797	EPE - Chaparral - SunE EPE1, LLC	EPE - Chaparral	Solar	########	########	12/31/2024	NM	N/A	1827	2797-NM-12-2024-87E31417-1 to 1827	No
NM RPS Active	9aa7ddf2-4ffc	W7202	Holloman Atlas Solar Array - Holloman Air Force Base HAFB	Holloman Atlas Solar Array	Solar	########	########	12/31/2024	NM	N/A	105	7202-NM-12-2024-8BAD7102-1 to 105	No

Account	Account ID	WREGIS GU ID	Unit Name	Facility Name	Fuel Type	Vintage	Generation Start Date	Generation End Date	Generator Location	Eligility	Quantity (RECs)	Serial Numbers
NM RPS Active	9aa7ddf2-4ffc	W12650	EPE NM175S - City of Las Cruces - Utilities - Waste Water	EPE NM175S	Solar	1/1/2024	1/1/2024	1/31/2024	NM	N/A	3	12650-NM-01-2024-0322C489-1 to 3
NM RPS Active	9aa7ddf2-4ffc	W3622	EPENMAGG1S NM001S	EPENMAGG1S NM001S	Solar	1/1/2024	1/1/2024	1/31/2024	NM	N/A	1	3622-NM-01-2024-89D5D0EB-1 to 1
NM RPS Active	9aa7ddf2-4ffc	W3624	EPENMAGG1S NM002S	EPENMAGG1S NM002S	Solar	1/1/2024	1/1/2024	1/31/2024	NM	N/A	2	3624-NM-01-2024-214551F6-1 to 2
NM RPS Active	9aa7ddf2-4ffc	W3637	EPENMAGG1S NM003S	EPENMAGG1S NM003S	Solar	1/1/2024	1/1/2024	1/31/2024	NM	N/A	1	3637-NM-01-2024-8BB07457-1 to 1
NM RPS Active	9aa7ddf2-4ffc	W3638	EPENMAGG1S NM004S	EPENMAGG1S NM004S	Solar	1/1/2024	1/1/2024	1/31/2024	NM	N/A	3	3638-NM-01-2024-2A451BBE-1 to 3
NM RPS Active	9aa7ddf2-4ffc	W3639	EPENMAGG1s NM005S	EPENMAGG1s NM005S	Solar	1/1/2024	1/1/2024	1/31/2024	NM	N/A	3	3639-NM-01-2024-638B402A-1 to 3
NM RPS Active	9aa7ddf2-4ffc	W3641	EPENMAGG1s NM007S	EPENMAGG1s NM007S	Solar	1/1/2024	1/1/2024	1/31/2024	NM	N/A	2	3641-NM-01-2024-900283BB-1 to 2
NM RPS Active	9aa7ddf2-4ffc	W3642	EPENMAGG1s NM008S	EPENMAGG1s NM008S	Solar	1/1/2024	1/1/2024	1/31/2024	NM	N/A	6	3642-NM-01-2024-7A618923-1 to 6
NM RPS Active	9aa7ddf2-4ffc	W3643	EPENMAGG1s NM009S	EPENMAGG1s NM009S	Solar	1/1/2024	1/1/2024	1/31/2024	NM	N/A	2	3643-NM-01-2024-989052B3-1 to 2
NM RPS Active	9aa7ddf2-4ffc	W3644	EPENMAGG1S NM010S	EPENMAGG1S NM010S	Solar	1/1/2024	1/1/2024	1/31/2024	NM	N/A	1	3644-NM-01-2024-0D9A6037-1 to 1
NM RPS Active	9aa7ddf2-4ffc	W3645	EPENMAGG1S NM011S	EPENMAGG1S NM011S	Solar	1/1/2024	1/1/2024	1/31/2024	NM	N/A	1	3645-NM-01-2024-8C9321FD-1 to 1
NM RPS Active	9aa7ddf2-4ffc	W3646	EPENMAGG1S NM012S	EPENMAGG1S NM012S	Solar	1/1/2024	1/1/2024	1/31/2024	NM	N/A	3	3646-NM-01-2024-35A381EF-1 to 3
NM RPS Active	9aa7ddf2-4ffc	W3647	EPENMAGG1S NM013S	EPENMAGG1S NM013S	Solar	1/1/2024	1/1/2024	1/31/2024	NM	N/A	2	3647-NM-01-2024-854E86FA-1 to 2
NM RPS Active	9aa7ddf2-4ffc	W3650	EPENMAGG1S NM016S	EPENMAGG1S NM016S	Solar	1/1/2024	1/1/2024	1/31/2024	NM	N/A	2	3650-NM-01-2024-2703E27E-1 to 2
NM RPS Active	9aa7ddf2-4ffc	W3651	EPENMAGG1S NM017S	EPENMAGG1S NM017S	Solar	1/1/2024	1/1/2024	1/31/2024	NM	N/A	2	3651-NM-01-2024-1B925882-1 to 2
NM RPS Active	9aa7ddf2-4ffc	W3652	EPENMAGG1S NM018S	EPENMAGG1S NM018S	Solar	1/1/2024	1/1/2024	1/31/2024	NM	N/A	3	3652-NM-01-2024-C2E9E539-1 to 3
NM RPS Active	9aa7ddf2-4ffc	W3653	EPENMAGG1S NM019S	EPENMAGG1S NM019S	Solar	1/1/2024	1/1/2024	1/31/2024	NM	N/A	2	3653-NM-01-2024-3B828FB8-1 to 2
NM RPS Active	9aa7ddf2-4ffc	W3654	EPENMAGG1S NM020S	EPENMAGG1S NM020S	Solar	1/1/2024	1/1/2024	1/31/2024	NM	N/A	3	3654-NM-01-2024-201C2CC1-1 to 3
NM RPS Active	9aa7ddf2-4ffc	W3655	EPENMAGG1S NM021S	EPENMAGG1S NM021S	Solar	1/1/2024	1/1/2024	1/31/2024	NM	N/A	2	3655-NM-01-2024-1FE75D99-1 to 2
NM RPS Active	9aa7ddf2-4ffc	W3656	EPENMAGG1S NM022S	EPENMAGG1S NM022S	Solar	1/1/2024	1/1/2024	1/31/2024	NM	N/A	3	3656-NM-01-2024-1996B1CD-1 to 3
NM RPS Active	9aa7ddf2-4ffc	W3657	EPENMAGG1S NM023S	EPENMAGG1S NM023S	Solar	1/1/2024	1/1/2024	1/31/2024	NM	N/A	2	3657-NM-01-2024-B70725EB-1 to 2
NM RPS Active	9aa7ddf2-4ffc	W3658	EPENMAGG1S NM024S	EPENMAGG1S NM024S	Solar	1/1/2024	1/1/2024	1/31/2024	NM	N/A	4	3658-NM-01-2024-B6C05BA5-1 to 4
NM RPS Active	9aa7ddf2-4ffc	W3659	EPENMAGG1S NM025S	EPENMAGG1S NM025S	Solar	1/1/2024	1/1/2024	1/31/2024	NM	N/A	3	3659-NM-01-2024-78635A2B-1 to 3
NM RPS Active	9aa7ddf2-4ffc	W3660	EPENMAGG1S NM026S	EPENMAGG1S NM026S	Solar	1/1/2024	1/1/2024	1/31/2024	NM	N/A	3	3660-NM-01-2024-31D8F81C-1 to 3
NM RPS Active	9aa7ddf2-4ffc	W3838	EPENMAGG1S NM027S	EPENMAGG1S NM027S	Solar	1/1/2024	1/1/2024	1/31/2024	NM	N/A	4	3838-NM-01-2024-89EF7188-1 to 4
NM RPS Active	9aa7ddf2-4ffc	W3839	EPENMAGG1S NM028S	EPENMAGG1S NM028S	Solar	1/1/2024	1/1/2024	1/31/2024	NM	N/A	2	3839-NM-01-2024-8A76E173-1 to 2
NM RPS Active	9aa7ddf2-4ffc	W3946	EPENMAGG1S NM029S	EPENMAGG1S NM029S	Solar	1/1/2024	1/1/2024	1/31/2024	NM	N/A	3	3946-NM-01-2024-BAD9C261-1 to 3
NM RPS Active	9aa7ddf2-4ffc	W3947	EPENMAGG1S NM030S	EPENMAGG1S NM030S	Solar	1/1/2024	1/1/2024	1/31/2024	NM	N/A	2	3947-NM-01-2024-D1EAFF23-1 to 2
NM RPS Active	9aa7ddf2-4ffc	W3948	EPENMAGG1S NM031S	EPENMAGG1S NM031S	Solar	1/1/2024	1/1/2024	1/31/2024	NM	N/A	1	3948-NM-01-2024-AF2CBDE6-1 to 1
NM RPS Active	9aa7ddf2-4ffc	W3949	EPENMAGG1S NM032S	EPENMAGG1S NM032S	Solar	1/1/2024	1/1/2024	1/31/2024	NM	N/A	2	3949-NM-01-2024-DF0345CE-1 to 2
NM RPS Active	9aa7ddf2-4ffc	W3950	EPENMAGG1S NM033S	EPENMAGG1S NM033S	Solar	1/1/2024	1/1/2024	1/31/2024	NM	N/A	1	3950-NM-01-2024-5E2DC3F6-1 to 1
NM RPS Active	9aa7ddf2-4ffc	W3951	EPENMAGG1S NM034S	EPENMAGG1S NM034S	Solar	1/1/2024	1/1/2024	1/31/2024	NM	N/A	1	3951-NM-01-2024-C9EF1787-1 to 1
NM RPS Active	9aa7ddf2-4ffc	W3952	EPENMAGG1S NM035S	EPENMAGG1S NM035S	Solar	1/1/2024	1/1/2024	1/31/2024	NM	N/A	3	3952-NM-01-2024-16EED6A1-1 to 3
NM RPS Active	9aa7ddf2-4ffc	W4101	EPENMAGG1S NM036S	EPENMAGG1S NM036S	Solar	1/1/2024	1/1/2024	1/31/2024	NM	N/A	2	4101-NM-01-2024-DD2FE9E1-1 to 2
NM RPS Active	9aa7ddf2-4ffc	W4121	EPENMAGG1S NM037S	EPENMAGG1S NM037S	Solar	1/1/2024	1/1/2024	1/31/2024	NM	N/A	2	4121-NM-01-2024-9EBD3355-1 to 2
NM RPS Active	9aa7ddf2-4ffc	W4221	EPENMAGG1S NM038S	EPENMAGG1S NM038S	Solar	1/1/2024	1/1/2024	1/31/2024	NM	N/A	4	4221-NM-01-2024-4469A590-1 to 4
NM RPS Active	9aa7ddf2-4ffc	W4270	EPENMAGG1S NM039S	EPENMAGG1S NM039S	Solar	1/1/2024	1/1/2024	1/31/2024	NM	N/A	4	4270-NM-01-2024-FE666B80-1 to 4
NM RPS Active	9aa7ddf2-4ffc	W4341	EPENMAGG1S NM040S	EPENMAGG1S NM040S	Solar	1/1/2024	1/1/2024	1/31/2024	NM	N/A	1	4341-NM-01-2024-A1734479-1 to 1
NM RPS Active	9aa7ddf2-4ffc	W4412	EPENMAGG1S NM041S	EPENMAGG1S NM041S	Solar	1/1/2024	1/1/2024	1/31/2024	NM	N/A	2	4412-NM-01-2024-73C70D0E-1 to 2
NM RPS Active	9aa7ddf2-4ffc	W4437	EPENMAGG1S NM042S	EPENMAGG1S NM042S	Solar	1/1/2024	1/1/2024	1/31/2024	NM	N/A	5	4437-NM-01-2024-0D3F8D56-1 to 5
NM RPS Active	9aa7ddf2-4ffc	W4459	EPENMAGG1S NM043S	EPENMAGG1S NM043S	Solar	1/1/2024	1/1/2024	1/31/2024	NM	N/A	5	4459-NM-01-2024-DC5C2372-1 to 5
NM RPS Active	9aa7ddf2-4ffc	W4507	EPENMAGG1S NM044S	EPENMAGG1S NM044S	Solar	1/1/2024	1/1/2024	1/31/2024	NM	N/A	4	4507-NM-01-2024-797D2359-1 to 4
NM RPS Active	9aa7ddf2-4ffc	W4649	EPENMAGG1S NM045S	EPENMAGG1S NM045S	Solar	1/1/2024	1/1/2024	1/31/2024	NM	N/A	2	4649-NM-01-2024-A07BF3A6-1 to 2
NM RPS Active	9aa7ddf2-4ffc	W4704	EPENMAGG1S NM046S	EPENMAGG1S NM046S	Solar	1/1/2024	1/1/2024	1/31/2024	NM	N/A	4	4704-NM-01-2024-3C8DA308-1 to 4
NM RPS Active	9aa7ddf2-4ffc	W4732	EPENMAGG1S NM047S	EPENMAGG1S NM047S	Solar	1/1/2024	1/1/2024	1/31/2024	NM	N/A	2	4732-NM-01-2024-72B120EE-1 to 2
NM RPS Active	9aa7ddf2-4ffc	W4806	EPENMAGG1S NM048S	EPENMAGG1S NM048S	Solar	1/1/2024	1/1/2024	1/31/2024	NM	N/A	2	4806-NM-01-2024-49CA852C-1 to 2
NM RPS Active	9aa7ddf2-4ffc	W4833	EPENMAGG1S NM049S	EPENMAGG1S NM049S	Solar	1/1/2024	1/1/2024	1/31/2024	NM	N/A	1	4833-NM-01-2024-A5EC9948-1 to 1
NM RPS Active	9aa7ddf2-4ffc	W4842	EPENMAGG1S NM050S	EPENMAGG1S NM050S	Solar	1/1/2024	1/1/2024	1/31/2024	NM	N/A	1	4842-NM-01-2024-81BB6C89-1 to 1
NM RPS Active	9aa7ddf2-4ffc	W4843	EPENMAGG1S NM051S	EPENMAGG1S NM051S	Solar	1/1/2024	1/1/2024	1/31/2024	NM	N/A	1	4843-NM-01-2024-54F3C3B2-1 to 1
NM RPS Active	9aa7ddf2-4ffc	W4961	EPENMAGG1S NM052S	EPENMAGG1S NM052S	Solar	1/1/2024	1/1/2024	1/31/2024	NM	N/A	3	4961-NM-01-2024-830CBA11-1 to 3
NM RPS Active	9aa7ddf2-4ffc	W5022	EPENMAGG1S NM053S	EPENMAGG1S NM053S	Solar	1/1/2024	1/1/2024	1/31/2024	NM	N/A	2	5022-NM-01-2024-3AB0ABE6-1 to 2
NM RPS Active	9aa7ddf2-4ffc	W5071	EPENMAGG1S NM054S	EPENMAGG1S NM054S	Solar	1/1/2024	1/1/2024	1/31/2024	NM	N/A	2	5071-NM-01-2024-EC239FF2-1 to 2
NM RPS Active	9aa7ddf2-4ffc	W5080	EPENMAGG1S NM056S	EPENMAGG1S NM056S	Solar	1/1/2024	1/1/2024	1/31/2024	NM	N/A	3	5080-NM-01-2024-A444C657-1 to 3
NM RPS Active	9aa7ddf2-4ffc	W5111	EPENMAGG1S NM057S	EPENMAGG1S NM057S	Solar	1/1/2024	1/1/2024	1/31/2024	NM	N/A	5	5111-NM-01-2024-78C406D1-1 to 5
NM RPS Active	9aa7ddf2-4ffc	W5112	EPENMAGG1S NM058S	EPENMAGG1S NM058S	Solar	1/1/2024	1/1/2024	1/31/2024	NM	N/A	2	5112-NM-01-2024-35566C6C-1 to 2
NM RPS Active	9aa7ddf2-4ffc	W5318	EPENMAGG1S NM060S	EPENMAGG1S NM060S	Solar	1/1/2024	1/1/2024	1/31/2024	NM	SMUD	3	5318-NM-01-2024-DE7290D3-1 to 3

Account	Account ID	WREGIS GU ID	Unit Name	Facility Name	Fuel Type	Vintage	Generation Start Date	Generation End Date	Generator Location	Eligility	Quantity (RECs)	Serial Numbers
NM RPS Active	9aa7ddf2-4ffc	W5320	EPENMAGG1S NM062S	EPENMAGG1S NM062S	Solar	1/1/2024	1/1/2024	1/31/2024	NM	N/A	5	5320-NM-01-2024-7AEDC76A-1 to 5
NM RPS Active	9aa7ddf2-4ffc	W5379	EPENMAGG1S NM063S	EPENMAGG1S NM063S	Solar	1/1/2024	1/1/2024	1/31/2024	NM	N/A	2	5379-NM-01-2024-21B7BD31-1 to 2
NM RPS Active	9aa7ddf2-4ffc	W5469	EPENMAGG1S NM064S	EPENMAGG1S NM064S	Solar	1/1/2024	1/1/2024	1/31/2024	NM	N/A	3	5469-NM-01-2024-A8589854-1 to 3
NM RPS Active	9aa7ddf2-4ffc	W5547	EPENMAGG1S NM065S	EPENMAGG1S NM065S	Solar	1/1/2024	1/1/2024	1/31/2024	NM	N/A	1	5547-NM-01-2024-89735794-1 to 1
NM RPS Active	9aa7ddf2-4ffc	W5652	EPENMAGG1S NM067S	EPENMAGG1S NM067S	Solar	1/1/2024	1/1/2024	1/31/2024	NM	N/A	3	5652-NM-01-2024-0C57E80D-1 to 3
NM RPS Active	9aa7ddf2-4ffc	W5742	EPENMAGG1S NM070S	EPENMAGG1S NM070S	Solar	1/1/2024	1/1/2024	1/31/2024	NM	N/A	1	5742-NM-01-2024-286CB4AE-1 to 1
NM RPS Active	9aa7ddf2-4ffc	W5790	EPENMAGG1S NM071S	EPENMAGG1S NM071S	Solar	1/1/2024	1/1/2024	1/31/2024	NM	N/A	3	5790-NM-01-2024-1A771D57-1 to 3
NM RPS Active	9aa7ddf2-4ffc	W5869	EPENMAGG1S NM073S	EPENMAGG1S NM073S	Solar	1/1/2024	1/1/2024	1/31/2024	NM	N/A	1	5869-NM-01-2024-5E8437C3-1 to 1
NM RPS Active	9aa7ddf2-4ffc	W7116	EPENMAGG1S NM074S	EPENMAGG1S NM074S	Solar	1/1/2024	1/1/2024	1/31/2024	NM	N/A	1	7116-NM-01-2024-5E88A9C9-1 to 1
NM RPS Active	9aa7ddf2-4ffc	W7118	EPENMAGG1S NM076S	EPENMAGG1S NM076S	Solar	1/1/2024	1/1/2024	1/31/2024	NM	N/A	2	7118-NM-01-2024-1E6E3DB6-1 to 2
NM RPS Active	9aa7ddf2-4ffc	W7119	EPENMAGG1S NM077S	EPENMAGG1S NM077S	Solar	1/1/2024	1/1/2024	1/31/2024	NM	N/A	3	7119-NM-01-2024-B6046BD2-1 to 3
NM RPS Active	9aa7ddf2-4ffc	W7120	EPENMAGG1S NM078S	EPENMAGG1S NM078S	Solar	1/1/2024	1/1/2024	1/31/2024	NM	N/A	2	7120-NM-01-2024-05371C78-1 to 2
NM RPS Active	9aa7ddf2-4ffc	W7121	EPENMAGG1S NM079S	EPENMAGG1S NM079S	Solar	1/1/2024	1/1/2024	1/31/2024	NM	N/A	1	7121-NM-01-2024-C8475CAD-1 to 1
NM RPS Active	9aa7ddf2-4ffc	W7324	EPENMAGG1S NM080S	EPENMAGG1S NM080S	Solar	1/1/2024	1/1/2024	1/31/2024	NM	N/A	4	7324-NM-01-2024-1BB0CDF0-1 to 4
NM RPS Active	9aa7ddf2-4ffc	W7325	EPENMAGG1S NM081S	EPENMAGG1S NM081S	Solar	1/1/2024	1/1/2024	1/31/2024	NM	N/A	4	7325-NM-01-2024-C8DEA28C-1 to 4
NM RPS Active	9aa7ddf2-4ffc	W7332	EPENMAGG1S NM082S	EPENMAGG1S NM082S	Solar	1/1/2024	1/1/2024	1/31/2024	NM	N/A	3	7332-NM-01-2024-07D7BBF0-1 to 3
NM RPS Active	9aa7ddf2-4ffc	W7333	EPENMAGG1S NM083S	EPENMAGG1S NM083S	Solar	1/1/2024	1/1/2024	1/31/2024	NM	N/A	3	7333-NM-01-2024-016040E2-1 to 3
NM RPS Active	9aa7ddf2-4ffc	W7424	EPENMAGG1S NM084S	EPENMAGG1S NM084S	Solar	1/1/2024	1/1/2024	1/31/2024	NM	N/A	2	7424-NM-01-2024-0D63AA4D-1 to 2
NM RPS Active	9aa7ddf2-4ffc	W7425	EPENMAGG1S NM085S	EPENMAGG1S NM085S	Solar	1/1/2024	1/1/2024	1/31/2024	NM	N/A	1	7425-NM-01-2024-F026476D-1 to 1
NM RPS Active	9aa7ddf2-4ffc	W7547	EPENMAGG1S NM086S	EPENMAGG1S NM086S	Solar	1/1/2024	1/1/2024	1/31/2024	NM	N/A	3	7547-NM-01-2024-06B85C8B-1 to 3
NM RPS Active	9aa7ddf2-4ffc	W7554	EPENMAGG1S NM087S	EPENMAGG1S NM087S	Solar	1/1/2024	1/1/2024	1/31/2024	NM	N/A	4	7554-NM-01-2024-DBD567F0-1 to 4
NM RPS Active	9aa7ddf2-4ffc	W7555	EPENMAGG1S NM088S	EPENMAGG1S NM088S	Solar	1/1/2024	1/1/2024	1/31/2024	NM	N/A	1	7555-NM-01-2024-B99116C0-1 to 1
NM RPS Active	9aa7ddf2-4ffc	W7558	EPENMAGG1S NM091S	EPENMAGG1S NM091S	Solar	1/1/2024	1/1/2024	1/31/2024	NM	N/A	3	7558-NM-01-2024-554FC2EB-1 to 3
NM RPS Active	9aa7ddf2-4ffc	W7559	EPENMAGG1S NM092S	EPENMAGG1S NM092S	Solar	1/1/2024	1/1/2024	1/31/2024	NM	N/A	1	7559-NM-01-2024-DDE2F280-1 to 1
NM RPS Active	9aa7ddf2-4ffc	W7561	EPENMAGG1S NM093S	EPENMAGG1S NM093S	Solar	1/1/2024	1/1/2024	1/31/2024	NM	N/A	1	7561-NM-01-2024-4DA9BF44-1 to 1
NM RPS Active	9aa7ddf2-4ffc	W7671	EPENMAGG1S NM094S	EPENMAGG1S NM094S	Solar	1/1/2024	1/1/2024	1/31/2024	NM	N/A	1	7671-NM-01-2024-F3BA32BC-1 to 1
NM RPS Active	9aa7ddf2-4ffc	W7672	EPENMAGG1S NM095S	EPENMAGG1S NM095S	Solar	1/1/2024	1/1/2024	1/31/2024	NM	N/A	2	7672-NM-01-2024-395B2C8B-1 to 2
NM RPS Active	9aa7ddf2-4ffc	W7673	EPENMAGG1S NM096S	EPENMAGG1S NM096S	Solar	1/1/2024	1/1/2024	1/31/2024	NM	N/A	1	7673-NM-01-2024-1A0E8CEF-1 to 1
NM RPS Active	9aa7ddf2-4ffc	W7674	EPENMAGG1S NM097S	EPENMAGG1S NM097S	Solar	1/1/2024	1/1/2024	1/31/2024	NM	N/A	1	7674-NM-01-2024-D567C08A-1 to 1
NM RPS Active	9aa7ddf2-4ffc	W7700	EPENMAGG1S NM099S	EPENMAGG1S NM099S	Solar	1/1/2024	1/1/2024	1/31/2024	NM	N/A	2	7700-NM-01-2024-E5A19C5C-1 to 2
NM RPS Active	9aa7ddf2-4ffc	W8123	EPENMAGG1S NM100S	EPENMAGG1S NM100S	Solar	1/1/2024	1/1/2024	1/31/2024	NM	N/A	2	8123-NM-01-2024-60CABA56-1 to 2
NM RPS Active	9aa7ddf2-4ffc	W8124	EPENMAGG1S NM101S	EPENMAGG1S NM101S	Solar	1/1/2024	1/1/2024	1/31/2024	NM	N/A	4	8124-NM-01-2024-F487CB99-1 to 4
NM RPS Active	9aa7ddf2-4ffc	W8197	EPENMAGG1S NM102S	EPENMAGG1S NM102S	Solar	1/1/2024	1/1/2024	1/31/2024	NM	N/A	1	8197-NM-01-2024-E96EC38F-1 to 1
NM RPS Active	9aa7ddf2-4ffc	W8198	EPENMAGG1S NM103S	EPENMAGG1S NM103S	Solar	1/1/2024	1/1/2024	1/31/2024	NM	N/A	1	8198-NM-01-2024-E98A968B-1 to 1
NM RPS Active	9aa7ddf2-4ffc	W8794	EPENMAGG1S NM104S	EPENMAGG1S NM104S	Solar	1/1/2024	1/1/2024	1/31/2024	NM	N/A	4	8794-NM-01-2024-4B1EC98E-1 to 4
NM RPS Active	9aa7ddf2-4ffc	W8835	EPENMAGG1S NM105S	EPENMAGG1S NM105S	Solar	1/1/2024	1/1/2024	1/31/2024	NM	N/A	2	8835-NM-01-2024-A156D6B4-1 to 2
NM RPS Active	9aa7ddf2-4ffc	W8836	EPENMAGG1S NM106S	EPENMAGG1S NM106S	Solar	1/1/2024	1/1/2024	1/31/2024	NM	N/A	1	8836-NM-01-2024-AEFB91C2-1 to 1
NM RPS Active	9aa7ddf2-4ffc	W9324	EPENMAGG1S NM107S	EPENMAGG1S NM107S	Solar	1/1/2024	1/1/2024	1/31/2024	NM	N/A	3	9324-NM-01-2024-39A00812-1 to 3
NM RPS Active	9aa7ddf2-4ffc	W9325	EPENMAGG1S NM108S	EPENMAGG1S NM108S	Solar	1/1/2024	1/1/2024	1/31/2024	NM	N/A	3	9325-NM-01-2024-D49BF268-1 to 3
NM RPS Active	9aa7ddf2-4ffc	W9344	EPENMAGG1S NM109S	EPENMAGG1S NM109S	Solar	1/1/2024	1/1/2024	1/31/2024	NM	N/A	2	9344-NM-01-2024-46F5B92D-1 to 2
NM RPS Active	9aa7ddf2-4ffc	W9345	EPENMAGG1S NM110S	EPENMAGG1S NM110S	Solar	1/1/2024	1/1/2024	1/31/2024	NM	N/A	2	9345-NM-01-2024-1AD82359-1 to 2
NM RPS Active	9aa7ddf2-4ffc	W9602	EPENMAGG1S NM111S	EPENMAGG1S NM111S	Solar	1/1/2024	1/1/2024	1/31/2024	NM	N/A	2	9602-NM-01-2024-FE9D9622-1 to 2
NM RPS Active	9aa7ddf2-4ffc	W9603	EPENMAGG1S NM112S	EPENMAGG1S NM112S	Solar	1/1/2024	1/1/2024	1/31/2024	NM	N/A	1	9603-NM-01-2024-102A9EB5-1 to 1
NM RPS Active	9aa7ddf2-4ffc	W10025	EPENMAGG1S NM113S	EPENMAGG1S NM113S	Solar	1/1/2024	1/1/2024	1/31/2024	NM	N/A	1	10025-NM-01-2024-03265422-1 to 1
NM RPS Active	9aa7ddf2-4ffc	W10026	EPENMAGG1S NM114S	EPENMAGG1S NM114S	Solar	1/1/2024	1/1/2024	1/31/2024	NM	N/A	3	10026-NM-01-2024-6E49F239-1 to 3
NM RPS Active	9aa7ddf2-4ffc	W10027	EPENMAGG1S NM115S	EPENMAGG1S NM115S	Solar	1/1/2024	1/1/2024	1/31/2024	NM	N/A	2	10027-NM-01-2024-7AFFA275-1 to 2
NM RPS Active	9aa7ddf2-4ffc	W10105	EPENMAGG1S NM116S	EPENMAGG1S NM116S	Solar	1/1/2024	1/1/2024	1/31/2024	NM	N/A	1	10105-NM-01-2024-89126691-1 to 1
NM RPS Active	9aa7ddf2-4ffc	W10106	EPENMAGG1S NM117S	EPENMAGG1S NM117S	Solar	1/1/2024	1/1/2024	1/31/2024	NM	N/A	2	10106-NM-01-2024-08876E76-1 to 2
NM RPS Active	9aa7ddf2-4ffc	W10107	EPENMAGG1S NM118S	EPENMAGG1S NM118S	Solar	1/1/2024	1/1/2024	1/31/2024	NM	N/A	3	10107-NM-01-2024-1A2DCCBA-1 to 3
NM RPS Active	9aa7ddf2-4ffc	W10167	EPENMAGG1S NM119S	EPENMAGG1S NM119S	Solar	1/1/2024	1/1/2024	1/31/2024	NM	N/A	2	10167-NM-01-2024-2A984210-1 to 2
NM RPS Active	9aa7ddf2-4ffc	W10460	EPENMAGG1S NM121S	EPENMAGG1S NM121S	Solar	1/1/2024	1/1/2024	1/31/2024	NM	N/A	2	10460-NM-01-2024-808EE7F3-1 to 2
NM RPS Active	9aa7ddf2-4ffc	W10461	EPENMAGG1S NM122S	EPENMAGG1S NM122S	Solar	1/1/2024	1/1/2024	1/31/2024	NM	N/A	3	10461-NM-01-2024-A2CFE439-1 to 3
NM RPS Active	9aa7ddf2-4ffc	W10695	EPENMAGG1S NM124S	EPENMAGG1S NM124S	Solar	1/1/2024	1/1/2024	1/31/2024	NM	N/A	2	10695-NM-01-2024-1E0DAC21-1 to 2
NM RPS Active	9aa7ddf2-4ffc	W10800	EPENMAGG1S NM125S	EPENMAGG1S NM125S	Solar	1/1/2024	1/1/2024	1/31/2024	NM	N/A	1	10800-NM-01-2024-C2500843-1 to 1
NM RPS Active	9aa7ddf2-4ffc	W10820	EPENMAGG1S NM126S	EPENMAGG1S NM126S	Solar	1/1/2024	1/1/2024	1/31/2024	NM	N/A	1	10820-NM-01-2024-BFA94B78-1 to 1
NM RPS Active	9aa7ddf2-4ffc	W10821	EPENMAGG1S NM127S	EPENMAGG1S NM127S	Solar	1/1/2024	1/1/2024	1/31/2024	NM	N/A	2	10821-NM-01-2024-88FA41DE-1 to 2
NM RPS Active	9aa7ddf2-4ffc	W10867	EPENMAGG1S NM128S	EPENMAGG1S NM128S	Solar	1/1/2024	1/1/2024	1/31/2024	NM	N/A	2	10867-NM-01-2024-024B266D-1 to 2
NM RPS Active	9aa7ddf2-4ffc	W10868	EPENMAGG1S NM129S	EPENMAGG1S NM129S	Solar	1/1/2024	1/1/2024	1/31/2024	NM	N/A	2	10868-NM-01-2024-DE8D8E85-1 to 2

Account	Account ID	WREGIS GU ID	Unit Name	Facility Name	Fuel Type	Vintage	Generation Start Date	Generation End Date	Generator Location	Eligility	Quantity (RECs)	Serial Numbers
NM RPS Active	9aa7ddf2-4ffc	W10925	EPENMAGG1S NM131S	EPENMAGG1S NM131S	Solar	1/1/2024	1/1/2024	1/31/2024	NM	N/A	2	10925-NM-01-2024-959A5B59-1 to 2
NM RPS Active	9aa7ddf2-4ffc	W10926	EPENMAGG1S NM132S	EPENMAGG1S NM132S	Solar	1/1/2024	1/1/2024	1/31/2024	NM	N/A	2	10926-NM-01-2024-6149743E-1 to 2
NM RPS Active	9aa7ddf2-4ffc	W11361	EPENMAGG1S NM133S	EPENMAGG1S NM133S	Solar	1/1/2024	1/1/2024	1/31/2024	NM	N/A	1	11361-NM-01-2024-E2A113C0-1 to 1
NM RPS Active	9aa7ddf2-4ffc	W11363	EPENMAGG1S NM135S	EPENMAGG1S NM135S	Solar	1/1/2024	1/1/2024	1/31/2024	NM	N/A	2	11363-NM-01-2024-80D8AD48-1 to 2
NM RPS Active	9aa7ddf2-4ffc	W11374	EPENMAGG1S NM136S	EPENMAGG1S NM136S	Solar	1/1/2024	1/1/2024	1/31/2024	NM	N/A	2	11374-NM-01-2024-ACB76988-1 to 2
NM RPS Active	9aa7ddf2-4ffc	W11375	EPENMAGG1S NM137S	EPENMAGG1S NM137S	Solar	1/1/2024	1/1/2024	1/31/2024	NM	N/A	4	11375-NM-01-2024-286809E7-1 to 4
NM RPS Active	9aa7ddf2-4ffc	W11377	EPENMAGG1S NM138S	EPENMAGG1S NM138S	Solar	1/1/2024	1/1/2024	1/31/2024	NM	N/A	3	11377-NM-01-2024-655C55C4-1 to 3
NM RPS Active	9aa7ddf2-4ffc	W11378	EPENMAGG1S NM139S	EPENMAGG1S NM139S	Solar	1/1/2024	1/1/2024	1/31/2024	NM	N/A	3	11378-NM-01-2024-ED4FF17C-1 to 3
NM RPS Active	9aa7ddf2-4ffc	W11379	EPENMAGG1S NM140S	EPENMAGG1S NM140S	Solar	1/1/2024	1/1/2024	1/31/2024	NM	N/A	2	11379-NM-01-2024-0B4680CE-1 to 2
NM RPS Active	9aa7ddf2-4ffc	W11381	EPENMAGG1S NM141S	EPENMAGG1S NM141S	Solar	1/1/2024	1/1/2024	1/31/2024	NM	N/A	4	11381-NM-01-2024-A89C17B4-1 to 4
NM RPS Active	9aa7ddf2-4ffc	W11382	EPENMAGG1S NM142S	EPENMAGG1S NM142S	Solar	1/1/2024	1/1/2024	1/31/2024	NM	N/A	3	11382-NM-01-2024-2ADA5C27-1 to 3
NM RPS Active	9aa7ddf2-4ffc	W11383	EPENMAGG1S NM143S	EPENMAGG1S NM143S	Solar	1/1/2024	1/1/2024	1/31/2024	NM	N/A	1	11383-NM-01-2024-74C84B91-1 to 1
NM RPS Active	9aa7ddf2-4ffc	W11384	EPENMAGG1S NM144S	EPENMAGG1S NM144S	Solar	1/1/2024	1/1/2024	1/31/2024	NM	N/A	3	11384-NM-01-2024-91F2C868-1 to 3
NM RPS Active	9aa7ddf2-4ffc	W11968	EPENMAGG1S NM145S	EPENMAGG1S NM145S	Solar	1/1/2024	1/1/2024	1/31/2024	NM	N/A	2	11968-NM-01-2024-B2E378E2-1 to 2
NM RPS Active	9aa7ddf2-4ffc	W11969	EPENMAGG1S NM146S	EPENMAGG1S NM146S	Solar	1/1/2024	1/1/2024	1/31/2024	NM	N/A	3	11969-NM-01-2024-2A189261-1 to 3
NM RPS Active	9aa7ddf2-4ffc	W11970	EPENMAGG1S NM147S	EPENMAGG1S NM147S	Solar	1/1/2024	1/1/2024	1/31/2024	NM	N/A	5	11970-NM-01-2024-22710D2E-1 to 5
NM RPS Active	9aa7ddf2-4ffc	W11972	EPENMAGG1S NM149S	EPENMAGG1S NM149S	Solar	1/1/2024	1/1/2024	1/31/2024	NM	N/A	1	11972-NM-01-2024-C6E34B6D-1 to 1
NM RPS Active	9aa7ddf2-4ffc	W11973	EPENMAGG1S NM150S	EPENMAGG1S NM150S	Solar	1/1/2024	1/1/2024	1/31/2024	NM	N/A	2	11973-NM-01-2024-38688B34-1 to 2
NM RPS Active	9aa7ddf2-4ffc	W11974	EPENMAGG1S NM151S	EPENMAGG1S NM151S	Solar	1/1/2024	1/1/2024	1/31/2024	NM	N/A	2	11974-NM-01-2024-9D5DB321-1 to 2
NM RPS Active	9aa7ddf2-4ffc	W11975	EPENMAGG1S NM152S	EPENMAGG1S NM152S	Solar	1/1/2024	1/1/2024	1/31/2024	NM	N/A	2	11975-NM-01-2024-3CCB2DC6-1 to 2
NM RPS Active	9aa7ddf2-4ffc	W11976	EPENMAGG1S NM153S	EPENMAGG1S NM153S	Solar	1/1/2024	1/1/2024	1/31/2024	NM	N/A	3	11976-NM-01-2024-7AAF04AA-1 to 3
NM RPS Active	9aa7ddf2-4ffc	W11977	EPENMAGG1S NM154S	EPENMAGG1S NM154S	Solar	1/1/2024	1/1/2024	1/31/2024	NM	N/A	2	11977-NM-01-2024-CD6E44C5-1 to 2
NM RPS Active	9aa7ddf2-4ffc	W11980	EPENMAGG1S NM156S	EPENMAGG1S NM156S	Solar	1/1/2024	1/1/2024	1/31/2024	NM	N/A	3	11980-NM-01-2024-7A8292EB-1 to 3
NM RPS Active	9aa7ddf2-4ffc	W11981	EPENMAGG1S NM157S	EPENMAGG1S NM157S	Solar	1/1/2024	1/1/2024	1/31/2024	NM	N/A	2	11981-NM-01-2024-4DB07AE8-1 to 2
NM RPS Active	9aa7ddf2-4ffc	W11982	EPENMAGG1S NM158S	EPENMAGG1S NM158S	Solar	1/1/2024	1/1/2024	1/31/2024	NM	N/A	3	11982-NM-01-2024-46F7B740-1 to 3
NM RPS Active	9aa7ddf2-4ffc	W11984	EPENMAGG1S NM159S	EPENMAGG1S NM159S	Solar	1/1/2024	1/1/2024	1/31/2024	NM	N/A	2	11984-NM-01-2024-0B8C0537-1 to 2
NM RPS Active	9aa7ddf2-4ffc	W12098	EPENMAGG1S NM160S	EPENMAGG1S NM160S	Solar	1/1/2024	1/1/2024	1/31/2024	NM	N/A	3	12098-NM-01-2024-02431CD4-1 to 3
NM RPS Active	9aa7ddf2-4ffc	W12099	EPENMAGG1S NM161S	EPENMAGG1S NM161S	Solar	1/1/2024	1/1/2024	1/31/2024	NM	N/A	2	12099-NM-01-2024-D222D600-1 to 2
NM RPS Active	9aa7ddf2-4ffc	W12100	EPENMAGG1S NM162S	EPENMAGG1S NM162S	Solar	1/1/2024	1/1/2024	1/31/2024	NM	N/A	4	12100-NM-01-2024-D6AD9E2C-1 to 4
NM RPS Active	9aa7ddf2-4ffc	W12101	EPENMAGG1S NM163S	EPENMAGG1S NM163S	Solar	1/1/2024	1/1/2024	1/31/2024	NM	N/A	2	12101-NM-01-2024-B03FE65C-1 to 2
NM RPS Active	9aa7ddf2-4ffc	W12188	EPENMAGG1S NM164S	EPENMAGG1S NM164S	Solar	1/1/2024	1/1/2024	1/31/2024	NM	N/A	2	12188-NM-01-2024-690C577A-1 to 2
NM RPS Active	9aa7ddf2-4ffc	W12257	EPENMAGG1S NM166S	EPENMAGG1S NM166S	Solar	1/1/2024	1/1/2024	1/31/2024	NM	N/A	1	12257-NM-01-2024-C7D36F7A-1 to 1
NM RPS Active	9aa7ddf2-4ffc	W12260	EPENMAGG1S NM168S	EPENMAGG1S NM168S	Solar	1/1/2024	1/1/2024	1/31/2024	NM	N/A	3	12260-NM-01-2024-2C4EEC63-1 to 3
NM RPS Active	9aa7ddf2-4ffc	W12643	EPENMAGG1S NM170S	EPENMAGG1S NM170S	Solar	1/1/2024	1/1/2024	1/31/2024	NM	N/A	5	12643-NM-01-2024-8070A524-1 to 5
NM RPS Active	9aa7ddf2-4ffc	W12646	EPENMAGG1S NM173S	EPENMAGG1S NM173S	Solar	1/1/2024	1/1/2024	1/31/2024	NM	N/A	3	12646-NM-01-2024-BDBBBA47-1 to 3
NM RPS Active	9aa7ddf2-4ffc	W12651	EPENMAGG1S NM176S	EPENMAGG1S NM176S	Solar	1/1/2024	1/1/2024	1/31/2024	NM	N/A	3	12651-NM-01-2024-5A06B6F3-1 to 3
NM RPS Active	9aa7ddf2-4ffc	W12702	EPENMAGG1S NM177S	EPENMAGG1S NM177S	Solar	1/1/2024	1/1/2024	1/31/2024	NM	N/A	3	12702-NM-01-2024-87B557A9-1 to 3
NM RPS Active	9aa7ddf2-4ffc	W12703	EPENMAGG1S NM178S	EPENMAGG1S NM178S	Solar	1/1/2024	1/1/2024	1/31/2024	NM	N/A	4	12703-NM-01-2024-3EFF575B-1 to 4
NM RPS Active	9aa7ddf2-4ffc	W12704	EPENMAGG1S NM179S	EPENMAGG1S NM179S	Solar	1/1/2024	1/1/2024	1/31/2024	NM	N/A	4	12704-NM-01-2024-223DBFB0-1 to 4
NM RPS Active	9aa7ddf2-4ffc	W12744	EPENMAGG1S NM180S	EPENMAGG1S NM180S	Solar	1/1/2024	1/1/2024	1/31/2024	NM	N/A	4	12744-NM-01-2024-B4B63FB2-1 to 4
NM RPS Active	9aa7ddf2-4ffc	W12745	EPENMAGG1S NM181S	EPENMAGG1S NM181S	Solar	1/1/2024	1/1/2024	1/31/2024	NM	N/A	2	12745-NM-01-2024-6DD31D2C-1 to 2
NM RPS Active	9aa7ddf2-4ffc	W13207	EPENMAGG1S NM182S	EPENMAGG1S NM182S	Solar	1/1/2024	1/1/2024	1/31/2024	NM	N/A	5	13207-NM-01-2024-09AE67E4-1 to 5
NM RPS Active	9aa7ddf2-4ffc	W13208	EPENMAGG1S NM183S	EPENMAGG1S NM183S	Solar	1/1/2024	1/1/2024	1/31/2024	NM	N/A	3	13208-NM-01-2024-29B09C5E-1 to 3
NM RPS Active	9aa7ddf2-4ffc	W13211	EPENMAGG1S NM185S	EPENMAGG1S NM185S	Solar	1/1/2024	1/1/2024	1/31/2024	NM	N/A	4	13211-NM-01-2024-2A61DADC-1 to 4
NM RPS Active	9aa7ddf2-4ffc	W13615	EPENMAGG1S NM186S	EPENMAGG1S NM186S	Solar	1/1/2024	1/1/2024	1/31/2024	NM	N/A	4	13615-NM-01-2024-DE3129DF-1 to 4
NM RPS Active	9aa7ddf2-4ffc	W13616	EPENMAGG1S NM187S	EPENMAGG1S NM187S	Solar	1/1/2024	1/1/2024	1/31/2024	NM	N/A	3	13616-NM-01-2024-FC23E3CE-1 to 3
NM RPS Active	9aa7ddf2-4ffc	W13701	EPENMAGG1S NM188S	EPENMAGG1S NM188S	Solar	1/1/2024	1/1/2024	1/31/2024	NM	N/A	1	13701-NM-01-2024-D6F3CA32-1 to 1
NM RPS Active	9aa7ddf2-4ffc	W13702	EPENMAGG1S NM189S	EPENMAGG1S NM189S	Solar	1/1/2024	1/1/2024	1/31/2024	NM	N/A	5	13702-NM-01-2024-37A53431-1 to 5
NM RPS Active	9aa7ddf2-4ffc	W13799	EPENMAGG1S NM190S	EPENMAGG1S NM190S	Solar	1/1/2024	1/1/2024	1/31/2024	NM	N/A	3	13799-NM-01-2024-8873C8A2-1 to 3
NM RPS Active	9aa7ddf2-4ffc	W13801	EPENMAGG1S NM191S	EPENMAGG1S NM191S	Solar	1/1/2024	1/1/2024	1/31/2024	NM	N/A	2	13801-NM-01-2024-503B1864-1 to 2
NM RPS Active	9aa7ddf2-4ffc	W13802	EPENMAGG1S NM192S	EPENMAGG1S NM192S	Solar	1/1/2024	1/1/2024	1/31/2024	NM	N/A	4	13802-NM-01-2024-A225126E-1 to 4
NM RPS Active	9aa7ddf2-4ffc	W13803	EPENMAGG1S NM193S	EPENMAGG1S NM193S	Solar	1/1/2024	1/1/2024	1/31/2024	NM	N/A	2	13803-NM-01-2024-34670BF0-1 to 2
NM RPS Active	9aa7ddf2-4ffc	W13804	EPENMAGG1S NM194S	EPENMAGG1S NM194S	Solar	1/1/2024	1/1/2024	1/31/2024	NM	N/A	5	13804-NM-01-2024-5FBE77B5-1 to 5
NM RPS Active	9aa7ddf2-4ffc	W13897	EPENMAGG1S NM195S	EPENMAGG1S NM195S	Solar	1/1/2024	1/1/2024	1/31/2024	NM	N/A	3	13897-NM-01-2024-C96E85DD-1 to 3
NM RPS Active	9aa7ddf2-4ffc	W13898	EPENMAGG1S NM196S	EPENMAGG1S NM196S	Solar	1/1/2024	1/1/2024	1/31/2024	NM	N/A	4	13898-NM-01-2024-9DEE1A2A-1 to 4
NM RPS Active	9aa7ddf2-4ffc	W13972	EPENMAGG1S NM197S	EPENMAGG1S NM197S	Solar	1/1/2024	1/1/2024	1/31/2024	NM	N/A	2	13972-NM-01-2024-27FD31BD-1 to 2
NM RPS Active	9aa7ddf2-4ffc	W13973	EPENMAGG1S NM198S	EPENMAGG1S NM198S	Solar	1/1/2024	1/1/2024	1/31/2024	NM	N/A	3	13973-NM-01-2024-A6A2FDD6-1 to 3
NM RPS Active	9aa7ddf2-4ffc	W13975	EPENMAGG1S NM199S	EPENMAGG1S NM199S	Solar	1/1/2024	1/1/2024	1/31/2024	NM	N/A	2	13975-NM-01-2024-ACA1D044-1 to 2

Account	Account ID	WREGIS GU ID	Unit Name	Facility Name	Fuel Type	Vintage	Generation Start Date	Generation End Date	Generator Location	Eligility	Quantity (RECs)	Serial Numbers
NM RPS Active	9aa7ddf2-4ffc	W14044	EPENMAGG1S NM200S	EPENMAGG1S NM200S	Solar	1/1/2024	1/1/2024	1/31/2024	NM	N/A	2	14044-NM-01-2024-F50D1FB8-1 to 2
NM RPS Active	9aa7ddf2-4ffc	W14045	EPENMAGG1S NM201S	EPENMAGG1S NM201S	Solar	1/1/2024	1/1/2024	1/31/2024	NM	SMUD	4	14045-NM-01-2024-758678F6-1 to 4
NM RPS Active	9aa7ddf2-4ffc	W14046	EPENMAGG1S NM202S	EPENMAGG1S NM202S	Solar	1/1/2024	1/1/2024	1/31/2024	NM	N/A	3	14046-NM-01-2024-E812BBC1-1 to 3
NM RPS Active	9aa7ddf2-4ffc	W14049	EPENMAGG1S NM204S	EPENMAGG1S NM204S	Solar	1/1/2024	1/1/2024	1/31/2024	NM	SMUD	3	14049-NM-01-2024-9294035E-1 to 3
NM RPS Active	9aa7ddf2-4ffc	W14225	N/A	EPENMAGG1S NM205S	Solar	1/1/2024	1/1/2024	1/31/2024	NM	N/A	4	14225-NM-01-2024-4976517E-1 to 4
NM RPS Active	9aa7ddf2-4ffc	W14230	N/A	EPENMAGG1S NM206S	Solar	1/1/2024	1/1/2024	1/31/2024	NM	N/A	2	14230-NM-01-2024-C366A24C-1 to 2
NM RPS Active	9aa7ddf2-4ffc	W14334	N/A	EPENMAGG1S NM207S	Solar	1/1/2024	1/1/2024	1/31/2024	NM	N/A	2	14334-NM-01-2024-5A23E83F-1 to 2
NM RPS Active	9aa7ddf2-4ffc	W15470	N/A	EPENMAGG1S NM208S	Solar	1/1/2024	1/1/2024	1/31/2024	NM	N/A	3	15470-NM-01-2024-53023323-1 to 3
NM RPS Active	9aa7ddf2-4ffc	W15471	N/A	EPENMAGG1S NM209S	Solar	1/1/2024	1/1/2024	1/31/2024	NM	N/A	3	15471-NM-01-2024-069B6EE0-1 to 3
NM RPS Active	9aa7ddf2-4ffc	W15472	N/A	EPENMAGG1S NM210S	Solar	1/1/2024	1/1/2024	1/31/2024	NM	N/A	3	15472-NM-01-2024-2F5BDC92-1 to 3
NM RPS Active	9aa7ddf2-4ffc	W15473	N/A	EPENMAGG1S NM211S	Solar	1/1/2024	1/1/2024	1/31/2024	NM	N/A	1	15473-NM-01-2024-F94FB40D-1 to 1
NM RPS Active	9aa7ddf2-4ffc	W15474	N/A	EPENMAGG1S NM212S	Solar	1/1/2024	1/1/2024	1/31/2024	NM	N/A	3	15474-NM-01-2024-D66BD4F0-1 to 3
NM RPS Active	9aa7ddf2-4ffc	W15475	N/A	EPENMAGG1S NM213S	Solar	1/1/2024	1/1/2024	1/31/2024	NM	N/A	5	15475-NM-01-2024-66403C84-1 to 5
NM RPS Active	9aa7ddf2-4ffc	W15517	N/A	EPENMAGG1S NM214S	Solar	1/1/2024	1/1/2024	1/31/2024	NM	N/A	3	15517-NM-01-2024-4FC9102B-1 to 3
NM RPS Active	9aa7ddf2-4ffc	W15518	N/A	EPENMAGG1S NM215S	Solar	1/1/2024	1/1/2024	1/31/2024	NM	N/A	3	15518-NM-01-2024-63336F6B-1 to 3
NM RPS Active	9aa7ddf2-4ffc	W15519	N/A	EPENMAGG1S NM216S	Solar	1/1/2024	1/1/2024	1/31/2024	NM	N/A	5	15519-NM-01-2024-5AA5256D-1 to 5
NM RPS Active	9aa7ddf2-4ffc	W15520	N/A	EPENMAGG1S NM217S	Solar	1/1/2024	1/1/2024	1/31/2024	NM	N/A	2	15520-NM-01-2024-9FE0E39D-1 to 2
NM RPS Active	9aa7ddf2-4ffc	W15521	N/A	EPENMAGG1S NM218S	Solar	1/1/2024	1/1/2024	1/31/2024	NM	N/A	2	15521-NM-01-2024-276435D2-1 to 2
NM RPS Active	9aa7ddf2-4ffc	W15533	N/A	EPENMAGG1S NM219S	Solar	1/1/2024	1/1/2024	1/31/2024	NM	N/A	3	15533-NM-01-2024-752C95BD-1 to 3
NM RPS Active	9aa7ddf2-4ffc	W15702	N/A	EPENMAGG1S NM220S	Solar	1/1/2024	1/1/2024	1/31/2024	NM	N/A	2	15702-NM-01-2024-FE6D65F4-1 to 2
NM RPS Active	9aa7ddf2-4ffc	W15703	N/A	EPENMAGG1S NM221S	Solar	1/1/2024	1/1/2024	1/31/2024	NM	N/A	4	15703-NM-01-2024-40213D6E-1 to 4
NM RPS Active	9aa7ddf2-4ffc	W15704	N/A	EPENMAGG1S NM222S	Solar	1/1/2024	1/1/2024	1/31/2024	NM	N/A	4	15704-NM-01-2024-76E06420-1 to 4
NM RPS Active	9aa7ddf2-4ffc	W15705	N/A	EPENMAGG1S NM223S	Solar	1/1/2024	1/1/2024	1/31/2024	NM	N/A	3	15705-NM-01-2024-AC72CC50-1 to 3
NM RPS Active	9aa7ddf2-4ffc	W16065	N/A	EPENMAGG1S NM224S	Solar	1/1/2024	1/1/2024	1/31/2024	NM	N/A	4	16065-NM-01-2024-3FF85E63-1 to 4
NM RPS Active	9aa7ddf2-4ffc	W16066	N/A	EPENMAGG1S NM225S	Solar	1/1/2024	1/1/2024	1/31/2024	NM	N/A	4	16066-NM-01-2024-B15ECE12-1 to 4
NM RPS Active	9aa7ddf2-4ffc	W16067	N/A	EPENMAGG1S NM226S	Solar	1/1/2024	1/1/2024	1/31/2024	NM	N/A	2	16067-NM-01-2024-C805006B-1 to 2
NM RPS Active	9aa7ddf2-4ffc	W16490	N/A	EPENMAGG1S NM227S	Solar	1/1/2024	1/1/2024	1/31/2024	NM	N/A	2	16490-NM-01-2024-67190F61-1 to 2
NM RPS Active	9aa7ddf2-4ffc	W16492	N/A	EPENMAGG1S NM229S	Solar	1/1/2024	1/1/2024	1/31/2024	NM	N/A	4	16492-NM-01-2024-EDA5447F-1 to 4
NM RPS Active	9aa7ddf2-4ffc	W16493	N/A	EPENMAGG1S NM230S	Solar	1/1/2024	1/1/2024	1/31/2024	NM	N/A	3	16493-NM-01-2024-27820397-1 to 3
NM RPS Active	9aa7ddf2-4ffc	W16494	N/A	EPENMAGG1S NM231S	Solar	1/1/2024	1/1/2024	1/31/2024	NM	N/A	2	16494-NM-01-2024-50CDDB3C-1 to 2
NM RPS Active	9aa7ddf2-4ffc	W17425	N/A	EPENMAGG1S NM232S	Solar	1/1/2024	1/1/2024	1/31/2024	NM	N/A	3	17425-NM-01-2024-F2F12141-1 to 3
NM RPS Active	9aa7ddf2-4ffc	W17426	N/A	EPENMAGG1S NM233S	Solar	1/1/2024	1/1/2024	1/31/2024	NM	N/A	4	17426-NM-01-2024-C54BA4E3-1 to 4
NM RPS Active	9aa7ddf2-4ffc	W17427	N/A	EPENMAGG1S NM235S	Solar	1/1/2024	1/1/2024	1/31/2024	NM	N/A	2	17427-NM-01-2024-BE05CAA9-1 to 2
NM RPS Active	9aa7ddf2-4ffc	W17428	N/A	EPENMAGG1S NM236S	Solar	1/1/2024	1/1/2024	1/31/2024	NM	N/A	3	17428-NM-01-2024-7B18A258-1 to 3
NM RPS Active	9aa7ddf2-4ffc	W17429	N/A	EPENMAGG1S NM237S	Solar	1/1/2024	1/1/2024	1/31/2024	NM	N/A	3	17429-NM-01-2024-B91ACEB6-1 to 3
NM RPS Active	9aa7ddf2-4ffc	W17430	N/A	EPENMAGG1S NM238S	Solar	1/1/2024	1/1/2024	1/31/2024	NM	N/A	4	17430-NM-01-2024-6AE2B9A9-1 to 4
NM RPS Active	9aa7ddf2-4ffc	W17431	N/A	EPENMAGG1S NM239S	Solar	1/1/2024	1/1/2024	1/31/2024	NM	N/A	3	17431-NM-01-2024-8CC99DA4-1 to 3
NM RPS Active	9aa7ddf2-4ffc	W17432	N/A	EPENMAGG1S NM240S	Solar	1/1/2024	1/1/2024	1/31/2024	NM	N/A	5	17432-NM-01-2024-E1E879A1-1 to 5
NM RPS Active	9aa7ddf2-4ffc	W17433	N/A	EPENMAGG1S NM241S	Solar	1/1/2024	1/1/2024	1/31/2024	NM	N/A	3	17433-NM-01-2024-AF50B5DC-1 to 3
NM RPS Active	9aa7ddf2-4ffc	W17434	N/A	EPENMAGG1S NM242S	Solar	1/1/2024	1/1/2024	1/31/2024	NM	N/A	3	17434-NM-01-2024-81EFD433-1 to 3
NM RPS Active	9aa7ddf2-4ffc	W17435	N/A	EPENMAGG1S NM243S	Solar	1/1/2024	1/1/2024	1/31/2024	NM	N/A	3	17435-NM-01-2024-6278688F-1 to 3
NM RPS Active	9aa7ddf2-4ffc	W17436	N/A	EPENMAGG1S NM244S	Solar	1/1/2024	1/1/2024	1/31/2024	NM	N/A	6	17436-NM-01-2024-93C18297-1 to 6
NM RPS Active	9aa7ddf2-4ffc	W17546	N/A	EPENMAGG1S NM245S	Solar	1/1/2024	1/1/2024	1/31/2024	NM	N/A	3	17546-NM-01-2024-C843B769-1 to 3
NM RPS Active	9aa7ddf2-4ffc	W17824	N/A	EPENMAGG1S NM246S	Solar	1/1/2024	1/1/2024	1/31/2024	NM	N/A	3	17824-NM-01-2024-1843A398-1 to 3
NM RPS Active	9aa7ddf2-4ffc	W17825	N/A	EPENMAGG1S NM247S	Solar	1/1/2024	1/1/2024	1/31/2024	NM	N/A	1	17825-NM-01-2024-08A013F3-1 to 1
NM RPS Active	9aa7ddf2-4ffc	W12650	EPE NM175S - City of Las Cruces - Utilities - Waste Water	EPE NM175S	Solar	2/1/2024	2/1/2024	2/29/2024	NM	N/A	6	12650-NM-02-2024-5F196ED7-1 to 6
NM RPS Active	9aa7ddf2-4ffc	W3622	EPENMAGG1S NM001S	EPENMAGG1S NM001S	Solar	2/1/2024	2/1/2024	2/29/2024	NM	N/A	2	3622-NM-02-2024-B0BC325D-1 to 2
NM RPS Active	9aa7ddf2-4ffc	W3624	EPENMAGG1S NM002S	EPENMAGG1S NM002S	Solar	2/1/2024	2/1/2024	2/29/2024	NM	N/A	1	3624-NM-02-2024-8C4A6369-1 to 1
NM RPS Active	9aa7ddf2-4ffc	W3637	EPENMAGG1S NM003S	EPENMAGG1S NM003S	Solar	2/1/2024	2/1/2024	2/29/2024	NM	N/A	3	3637-NM-02-2024-89181C06-1 to 3
NM RPS Active	9aa7ddf2-4ffc	W3638	EPENMAGG1S NM004S	EPENMAGG1S NM004S	Solar	2/1/2024	2/1/2024	2/29/2024	NM	N/A	3	3638-NM-02-2024-6B4179F8-1 to 3
NM RPS Active	9aa7ddf2-4ffc	W3639	EPENMAGG1s NM005S	EPENMAGG1s NM005S	Solar	2/1/2024	2/1/2024	2/29/2024	NM	N/A	1	3639-NM-02-2024-C931BD9A-1 to 1
NM RPS Active	9aa7ddf2-4ffc	W3641	EPENMAGG1s NM007S	EPENMAGG1s NM007S	Solar	2/1/2024	2/1/2024	2/29/2024	NM	N/A	2	3641-NM-02-2024-43012F2F-1 to 2
NM RPS Active	9aa7ddf2-4ffc	W3642	EPENMAGG1s NM008S	EPENMAGG1s NM008S	Solar	2/1/2024	2/1/2024	2/29/2024	NM	N/A	2	3642-NM-02-2024-7BDB51E3-1 to 2
NM RPS Active	9aa7ddf2-4ffc	W3643	EPENMAGG1s NM009S	EPENMAGG1s NM009S	Solar	2/1/2024	2/1/2024	2/29/2024	NM	N/A	2	3643-NM-02-2024-FA28746D-1 to 2
NM RPS Active	9aa7ddf2-4ffc	W3644	EPENMAGG1S NM010S	EPENMAGG1S NM010S	Solar	2/1/2024	2/1/2024	2/29/2024	NM	N/A	1	3644-NM-02-2024-D9F1A005-1 to 1
NM RPS Active	9aa7ddf2-4ffc	W3645	EPENMAGG1S NM011S	EPENMAGG1S NM011S	Solar	2/1/2024	2/1/2024	2/29/2024	NM	N/A	5	3645-NM-02-2024-C5816906-1 to 5

Account	Account ID	WREGIS GU ID	Unit Name	Facility Name	Fuel Type	Vintage	Generation Start Date	Generation End Date	Generator Location	Eligility	Quantity (RECs)	Serial Numbers
NM RPS Active	9aa7ddf2-4ffc	W3646	EPENMAGG1S NM012S	EPENMAGG1S NM012S	Solar	2/1/2024	2/1/2024	2/29/2024	NM	N/A	4	3646-NM-02-2024-F74BE8E9-1 to 4
NM RPS Active	9aa7ddf2-4ffc	W3647	EPENMAGG1S NM013S	EPENMAGG1S NM013S	Solar	2/1/2024	2/1/2024	2/29/2024	NM	N/A	2	3647-NM-02-2024-E0523D8F-1 to 2
NM RPS Active	9aa7ddf2-4ffc	W3650	EPENMAGG1S NM016S	EPENMAGG1S NM016S	Solar	2/1/2024	2/1/2024	2/29/2024	NM	N/A	1	3650-NM-02-2024-E0DAD1DE-1 to 1
NM RPS Active	9aa7ddf2-4ffc	W3651	EPENMAGG1S NM017S	EPENMAGG1S NM017S	Solar	2/1/2024	2/1/2024	2/29/2024	NM	N/A	3	3651-NM-02-2024-6E09EB7A-1 to 3
NM RPS Active	9aa7ddf2-4ffc	W3652	EPENMAGG1S NM018S	EPENMAGG1S NM018S	Solar	2/1/2024	2/1/2024	2/29/2024	NM	N/A	4	3652-NM-02-2024-0A6C81CB-1 to 4
NM RPS Active	9aa7ddf2-4ffc	W3653	EPENMAGG1S NM019S	EPENMAGG1S NM019S	Solar	2/1/2024	2/1/2024	2/29/2024	NM	N/A	1	3653-NM-02-2024-B120F0ED-1 to 1
NM RPS Active	9aa7ddf2-4ffc	W3654	EPENMAGG1S NM020S	EPENMAGG1S NM020S	Solar	2/1/2024	2/1/2024	2/29/2024	NM	N/A	3	3654-NM-02-2024-22F4AA0D-1 to 3
NM RPS Active	9aa7ddf2-4ffc	W3655	EPENMAGG1S NM021S	EPENMAGG1S NM021S	Solar	2/1/2024	2/1/2024	2/29/2024	NM	N/A	5	3655-NM-02-2024-DEE07DA7-1 to 5
NM RPS Active	9aa7ddf2-4ffc	W3656	EPENMAGG1S NM022S	EPENMAGG1S NM022S	Solar	2/1/2024	2/1/2024	2/29/2024	NM	N/A	4	3656-NM-02-2024-824D3A64-1 to 4
NM RPS Active	9aa7ddf2-4ffc	W3657	EPENMAGG1S NM023S	EPENMAGG1S NM023S	Solar	2/1/2024	2/1/2024	2/29/2024	NM	N/A	6	3657-NM-02-2024-CADE8228-1 to 6
NM RPS Active	9aa7ddf2-4ffc	W3658	EPENMAGG1S NM024S	EPENMAGG1S NM024S	Solar	2/1/2024	2/1/2024	2/29/2024	NM	N/A	4	3658-NM-02-2024-B6745226-1 to 4
NM RPS Active	9aa7ddf2-4ffc	W3659	EPENMAGG1S NM025S	EPENMAGG1S NM025S	Solar	2/1/2024	2/1/2024	2/29/2024	NM	N/A	4	3659-NM-02-2024-F467A39F-1 to 4
NM RPS Active	9aa7ddf2-4ffc	W3660	EPENMAGG1S NM026S	EPENMAGG1S NM026S	Solar	2/1/2024	2/1/2024	2/29/2024	NM	N/A	2	3660-NM-02-2024-953D8468-1 to 2
NM RPS Active	9aa7ddf2-4ffc	W3838	EPENMAGG1S NM027S	EPENMAGG1S NM027S	Solar	2/1/2024	2/1/2024	2/29/2024	NM	N/A	5	3838-NM-02-2024-182DFA09-1 to 5
NM RPS Active	9aa7ddf2-4ffc	W3839	EPENMAGG1S NM028S	EPENMAGG1S NM028S	Solar	2/1/2024	2/1/2024	2/29/2024	NM	N/A	4	3839-NM-02-2024-D4DF74EE-1 to 4
NM RPS Active	9aa7ddf2-4ffc	W3946	EPENMAGG1S NM029S	EPENMAGG1S NM029S	Solar	2/1/2024	2/1/2024	2/29/2024	NM	N/A	2	3946-NM-02-2024-6FA9887F-1 to 2
NM RPS Active	9aa7ddf2-4ffc	W3947	EPENMAGG1S NM030S	EPENMAGG1S NM030S	Solar	2/1/2024	2/1/2024	2/29/2024	NM	N/A	1	3947-NM-02-2024-66C34286-1 to 1
NM RPS Active	9aa7ddf2-4ffc	W3950	EPENMAGG1S NM033S	EPENMAGG1S NM033S	Solar	2/1/2024	2/1/2024	2/29/2024	NM	N/A	1	3950-NM-02-2024-BC5A9054-1 to 1
NM RPS Active	9aa7ddf2-4ffc	W3951	EPENMAGG1S NM034S	EPENMAGG1S NM034S	Solar	2/1/2024	2/1/2024	2/29/2024	NM	N/A	1	3951-NM-02-2024-0BCF4992-1 to 1
NM RPS Active	9aa7ddf2-4ffc	W3952	EPENMAGG1S NM035S	EPENMAGG1S NM035S	Solar	2/1/2024	2/1/2024	2/29/2024	NM	N/A	3	3952-NM-02-2024-642FD264-1 to 3
NM RPS Active	9aa7ddf2-4ffc	W4101	EPENMAGG1S NM036S	EPENMAGG1S NM036S	Solar	2/1/2024	2/1/2024	2/29/2024	NM	N/A	3	4101-NM-02-2024-802AC472-1 to 3
NM RPS Active	9aa7ddf2-4ffc	W4121	EPENMAGG1S NM037S	EPENMAGG1S NM037S	Solar	2/1/2024	2/1/2024	2/29/2024	NM	N/A	3	4121-NM-02-2024-C992DBF8-1 to 3
NM RPS Active	9aa7ddf2-4ffc	W4221	EPENMAGG1S NM038S	EPENMAGG1S NM038S	Solar	2/1/2024	2/1/2024	2/29/2024	NM	N/A	5	4221-NM-02-2024-358AAFD7-1 to 5
NM RPS Active	9aa7ddf2-4ffc	W4270	EPENMAGG1S NM039S	EPENMAGG1S NM039S	Solar	2/1/2024	2/1/2024	2/29/2024	NM	N/A	5	4270-NM-02-2024-53323786-1 to 5
NM RPS Active	9aa7ddf2-4ffc	W4341	EPENMAGG1S NM040S	EPENMAGG1S NM040S	Solar	2/1/2024	2/1/2024	2/29/2024	NM	N/A	2	4341-NM-02-2024-2F564D15-1 to 2
NM RPS Active	9aa7ddf2-4ffc	W4412	EPENMAGG1S NM041S	EPENMAGG1S NM041S	Solar	2/1/2024	2/1/2024	2/29/2024	NM	N/A	3	4412-NM-02-2024-1511A455-1 to 3
NM RPS Active	9aa7ddf2-4ffc	W4437	EPENMAGG1S NM042S	EPENMAGG1S NM042S	Solar	2/1/2024	2/1/2024	2/29/2024	NM	N/A	5	4437-NM-02-2024-D07BE521-1 to 5
NM RPS Active	9aa7ddf2-4ffc	W4459	EPENMAGG1S NM043S	EPENMAGG1S NM043S	Solar	2/1/2024	2/1/2024	2/29/2024	NM	N/A	7	4459-NM-02-2024-F9F009B9-1 to 7
NM RPS Active	9aa7ddf2-4ffc	W4507	EPENMAGG1S NM044S	EPENMAGG1S NM044S	Solar	2/1/2024	2/1/2024	2/29/2024	NM	N/A	5	4507-NM-02-2024-5303EDD8-1 to 5
NM RPS Active	9aa7ddf2-4ffc	W4649	EPENMAGG1S NM045S	EPENMAGG1S NM045S	Solar	2/1/2024	2/1/2024	2/29/2024	NM	N/A	3	4649-NM-02-2024-E29431B5-1 to 3
NM RPS Active	9aa7ddf2-4ffc	W4704	EPENMAGG1S NM046S	EPENMAGG1S NM046S	Solar	2/1/2024	2/1/2024	2/29/2024	NM	N/A	6	4704-NM-02-2024-BE33038C-1 to 6
NM RPS Active	9aa7ddf2-4ffc	W4732	EPENMAGG1S NM047S	EPENMAGG1S NM047S	Solar	2/1/2024	2/1/2024	2/29/2024	NM	N/A	2	4732-NM-02-2024-DD072DEE-1 to 2
NM RPS Active	9aa7ddf2-4ffc	W4806	EPENMAGG1S NM048S	EPENMAGG1S NM048S	Solar	2/1/2024	2/1/2024	2/29/2024	NM	N/A	3	4806-NM-02-2024-977FD485-1 to 3
NM RPS Active	9aa7ddf2-4ffc	W4833	EPENMAGG1S NM049S	EPENMAGG1S NM049S	Solar	2/1/2024	2/1/2024	2/29/2024	NM	N/A	2	4833-NM-02-2024-41C106FC-1 to 2
NM RPS Active	9aa7ddf2-4ffc	W4842	EPENMAGG1S NM050S	EPENMAGG1S NM050S	Solar	2/1/2024	2/1/2024	2/29/2024	NM	N/A	1	4842-NM-02-2024-B092D58E-1 to 1
NM RPS Active	9aa7ddf2-4ffc	W4843	EPENMAGG1S NM051S	EPENMAGG1S NM051S	Solar	2/1/2024	2/1/2024	2/29/2024	NM	N/A	3	4843-NM-02-2024-7A3E7BFC-1 to 3
NM RPS Active	9aa7ddf2-4ffc	W4961	EPENMAGG1S NM052S	EPENMAGG1S NM052S	Solar	2/1/2024	2/1/2024	2/29/2024	NM	N/A	3	4961-NM-02-2024-B9C91F94-1 to 3
NM RPS Active	9aa7ddf2-4ffc	W5022	EPENMAGG1S NM053S	EPENMAGG1S NM053S	Solar	2/1/2024	2/1/2024	2/29/2024	NM	N/A	13	5022-NM-02-2024-6FA1DE90-1 to 13
NM RPS Active	9aa7ddf2-4ffc	W5071	EPENMAGG1S NM054S	EPENMAGG1S NM054S	Solar	2/1/2024	2/1/2024	2/29/2024	NM	N/A	3	5071-NM-02-2024-8553939E-1 to 3
NM RPS Active	9aa7ddf2-4ffc	W5080	EPENMAGG1S NM056S	EPENMAGG1S NM056S	Solar	2/1/2024	2/1/2024	2/29/2024	NM	N/A	5	5080-NM-02-2024-6F196A1D-1 to 5
NM RPS Active	9aa7ddf2-4ffc	W5111	EPENMAGG1S NM057S	EPENMAGG1S NM057S	Solar	2/1/2024	2/1/2024	2/29/2024	NM	N/A	3	5111-NM-02-2024-09F76EAE-1 to 3
NM RPS Active	9aa7ddf2-4ffc	W5112	EPENMAGG1S NM058S	EPENMAGG1S NM058S	Solar	2/1/2024	2/1/2024	2/29/2024	NM	N/A	4	5112-NM-02-2024-C69AC028-1 to 4
NM RPS Active	9aa7ddf2-4ffc	W5318	EPENMAGG1S NM060S	EPENMAGG1S NM060S	Solar	2/1/2024	2/1/2024	2/29/2024	NM	SMUD	4	5318-NM-02-2024-1E87568D-1 to 4
NM RPS Active	9aa7ddf2-4ffc	W5320	EPENMAGG1S NM062S	EPENMAGG1S NM062S	Solar	2/1/2024	2/1/2024	2/29/2024	NM	N/A	6	5320-NM-02-2024-9AC7ACF4-1 to 6
NM RPS Active	9aa7ddf2-4ffc	W5379	EPENMAGG1S NM063S	EPENMAGG1S NM063S	Solar	2/1/2024	2/1/2024	2/29/2024	NM	N/A	4	5379-NM-02-2024-BB3AFE3C-1 to 4
NM RPS Active	9aa7ddf2-4ffc	W5469	EPENMAGG1S NM064S	EPENMAGG1S NM064S	Solar	2/1/2024	2/1/2024	2/29/2024	NM	N/A	2	5469-NM-02-2024-8A75A26A-1 to 2
NM RPS Active	9aa7ddf2-4ffc	W5547	EPENMAGG1S NM065S	EPENMAGG1S NM065S	Solar	2/1/2024	2/1/2024	2/29/2024	NM	N/A	3	5547-NM-02-2024-28C9402D-1 to 3
NM RPS Active	9aa7ddf2-4ffc	W5553	EPENMAGG1S NM066S	EPENMAGG1S NM066S	Solar	2/1/2024	2/1/2024	2/29/2024	NM	N/A	1	5553-NM-02-2024-16470F2C-1 to 1
NM RPS Active	9aa7ddf2-4ffc	W5652	EPENMAGG1S NM067S	EPENMAGG1S NM067S	Solar	2/1/2024	2/1/2024	2/29/2024	NM	N/A	2	5652-NM-02-2024-309ECB38-1 to 2
NM RPS Active	9aa7ddf2-4ffc	W5742	EPENMAGG1S NM070S	EPENMAGG1S NM070S	Solar	2/1/2024	2/1/2024	2/29/2024	NM	N/A	4	5742-NM-02-2024-2AF73136-1 to 4
NM RPS Active	9aa7ddf2-4ffc	W5790	EPENMAGG1S NM071S	EPENMAGG1S NM071S	Solar	2/1/2024	2/1/2024	2/29/2024	NM	N/A	2	5790-NM-02-2024-42215743-1 to 2
NM RPS Active	9aa7ddf2-4ffc	W5869	EPENMAGG1S NM073S	EPENMAGG1S NM073S	Solar	2/1/2024	2/1/2024	2/29/2024	NM	N/A	3	5869-NM-02-2024-1756DBF0-1 to 3
NM RPS Active	9aa7ddf2-4ffc	W7116	EPENMAGG1S NM074S	EPENMAGG1S NM074S	Solar	2/1/2024	2/1/2024	2/29/2024	NM	N/A	1	7116-NM-02-2024-79EE026E-1 to 1
NM RPS Active	9aa7ddf2-4ffc	W7117	EPENMAGG1S NM075S	EPENMAGG1S NM075S	Solar	2/1/2024	2/1/2024	2/29/2024	NM	N/A	2	7117-NM-02-2024-3C76C2AC-1 to 2
NM RPS Active	9aa7ddf2-4ffc	W7118	EPENMAGG1S NM076S	EPENMAGG1S NM076S	Solar	2/1/2024	2/1/2024	2/29/2024	NM	N/A	2	7118-NM-02-2024-7A1DC76B-1 to 2
NM RPS Active	9aa7ddf2-4ffc	W7119	EPENMAGG1S NM077S	EPENMAGG1S NM077S	Solar	2/1/2024	2/1/2024	2/29/2024	NM	N/A	4	7119-NM-02-2024-AA09BBE0-1 to 4
NM RPS Active	9aa7ddf2-4ffc	W7120	EPENMAGG1S NM078S	EPENMAGG1S NM078S	Solar	2/1/2024	2/1/2024	2/29/2024	NM	N/A	3	7120-NM-02-2024-88A56E90-1 to 3
NM RPS Active	9aa7ddf2-4ffc	W7121	EPENMAGG1S NM079S	EPENMAGG1S NM079S	Solar	2/1/2024	2/1/2024	2/29/2024	NM	N/A	3	7121-NM-02-2024-F62F2592-1 to 3

Account	Account ID	WREGIS GU ID	Unit Name	Facility Name	Fuel Type	Vintage	Generation Start Date	Generation End Date	Generator Location	Eligility	Quantity (RECs)	Serial Numbers
NM RPS Active	9aa7ddf2-4ffc	W7324	EPENMAGG1S NM080S	EPENMAGG1S NM080S	Solar	2/1/2024	2/1/2024	2/29/2024	NM	N/A	3	7324-NM-02-2024-BBC3A20F-1 to 3
NM RPS Active	9aa7ddf2-4ffc	W7325	EPENMAGG1S NM081S	EPENMAGG1S NM081S	Solar	2/1/2024	2/1/2024	2/29/2024	NM	N/A	4	7325-NM-02-2024-890A674B-1 to 4
NM RPS Active	9aa7ddf2-4ffc	W7332	EPENMAGG1S NM082S	EPENMAGG1S NM082S	Solar	2/1/2024	2/1/2024	2/29/2024	NM	N/A	5	7332-NM-02-2024-BE06DCD6-1 to 5
NM RPS Active	9aa7ddf2-4ffc	W7333	EPENMAGG1S NM083S	EPENMAGG1S NM083S	Solar	2/1/2024	2/1/2024	2/29/2024	NM	N/A	3	7333-NM-02-2024-051EEDC1-1 to 3
NM RPS Active	9aa7ddf2-4ffc	W7424	EPENMAGG1S NM084S	EPENMAGG1S NM084S	Solar	2/1/2024	2/1/2024	2/29/2024	NM	N/A	3	7424-NM-02-2024-2B93616B-1 to 3
NM RPS Active	9aa7ddf2-4ffc	W7425	EPENMAGG1S NM085S	EPENMAGG1S NM085S	Solar	2/1/2024	2/1/2024	2/29/2024	NM	N/A	2	7425-NM-02-2024-B1E96D2B-1 to 2
NM RPS Active	9aa7ddf2-4ffc	W7547	EPENMAGG1S NM086S	EPENMAGG1S NM086S	Solar	2/1/2024	2/1/2024	2/29/2024	NM	N/A	3	7547-NM-02-2024-ADFD18C5-1 to 3
NM RPS Active	9aa7ddf2-4ffc	W7554	EPENMAGG1S NM087S	EPENMAGG1S NM087S	Solar	2/1/2024	2/1/2024	2/29/2024	NM	N/A	4	7554-NM-02-2024-912E0CBC-1 to 4
NM RPS Active	9aa7ddf2-4ffc	W7555	EPENMAGG1S NM088S	EPENMAGG1S NM088S	Solar	2/1/2024	2/1/2024	2/29/2024	NM	N/A	1	7555-NM-02-2024-0E968244-1 to 1
NM RPS Active	9aa7ddf2-4ffc	W7556	EPENMAGG1S NM089S	EPENMAGG1S NM089S	Solar	2/1/2024	2/1/2024	2/29/2024	NM	N/A	2	7556-NM-02-2024-4E12446E-1 to 2
NM RPS Active	9aa7ddf2-4ffc	W7557	EPENMAGG1S NM090S	EPENMAGG1S NM090S	Solar	2/1/2024	2/1/2024	2/29/2024	NM	N/A	2	7557-NM-02-2024-8D99541E-1 to 2
NM RPS Active	9aa7ddf2-4ffc	W7558	EPENMAGG1S NM091S	EPENMAGG1S NM091S	Solar	2/1/2024	2/1/2024	2/29/2024	NM	N/A	4	7558-NM-02-2024-8AB5B8C3-1 to 4
NM RPS Active	9aa7ddf2-4ffc	W7559	EPENMAGG1S NM092S	EPENMAGG1S NM092S	Solar	2/1/2024	2/1/2024	2/29/2024	NM	N/A	4	7559-NM-02-2024-D3BCDF57-1 to 4
NM RPS Active	9aa7ddf2-4ffc	W7561	EPENMAGG1S NM093S	EPENMAGG1S NM093S	Solar	2/1/2024	2/1/2024	2/29/2024	NM	N/A	3	7561-NM-02-2024-1A5FADE1-1 to 3
NM RPS Active	9aa7ddf2-4ffc	W7671	EPENMAGG1S NM094S	EPENMAGG1S NM094S	Solar	2/1/2024	2/1/2024	2/29/2024	NM	N/A	2	7671-NM-02-2024-6F72F745-1 to 2
NM RPS Active	9aa7ddf2-4ffc	W7672	EPENMAGG1S NM095S	EPENMAGG1S NM095S	Solar	2/1/2024	2/1/2024	2/29/2024	NM	N/A	2	7672-NM-02-2024-86A3C965-1 to 2
NM RPS Active	9aa7ddf2-4ffc	W7673	EPENMAGG1S NM096S	EPENMAGG1S NM096S	Solar	2/1/2024	2/1/2024	2/29/2024	NM	N/A	2	7673-NM-02-2024-8D42EA45-1 to 2
NM RPS Active	9aa7ddf2-4ffc	W7674	EPENMAGG1S NM097S	EPENMAGG1S NM097S	Solar	2/1/2024	2/1/2024	2/29/2024	NM	N/A	2	7674-NM-02-2024-23BC81C5-1 to 2
NM RPS Active	9aa7ddf2-4ffc	W7699	EPENMAGG1S NM098S	EPENMAGG1S NM098S	Solar	2/1/2024	2/1/2024	2/29/2024	NM	N/A	2	7699-NM-02-2024-69A21091-1 to 2
NM RPS Active	9aa7ddf2-4ffc	W7700	EPENMAGG1S NM099S	EPENMAGG1S NM099S	Solar	2/1/2024	2/1/2024	2/29/2024	NM	N/A	4	7700-NM-02-2024-50B14936-1 to 4
NM RPS Active	9aa7ddf2-4ffc	W8123	EPENMAGG1S NM100S	EPENMAGG1S NM100S	Solar	2/1/2024	2/1/2024	2/29/2024	NM	N/A	3	8123-NM-02-2024-73398760-1 to 3
NM RPS Active	9aa7ddf2-4ffc	W8124	EPENMAGG1S NM101S	EPENMAGG1S NM101S	Solar	2/1/2024	2/1/2024	2/29/2024	NM	N/A	3	8124-NM-02-2024-AF8D683E-1 to 3
NM RPS Active	9aa7ddf2-4ffc	W8197	EPENMAGG1S NM102S	EPENMAGG1S NM102S	Solar	2/1/2024	2/1/2024	2/29/2024	NM	N/A	1	8197-NM-02-2024-CB61C94D-1 to 1
NM RPS Active	9aa7ddf2-4ffc	W8198	EPENMAGG1S NM103S	EPENMAGG1S NM103S	Solar	2/1/2024	2/1/2024	2/29/2024	NM	N/A	3	8198-NM-02-2024-141ECD04-1 to 3
NM RPS Active	9aa7ddf2-4ffc	W8794	EPENMAGG1S NM104S	EPENMAGG1S NM104S	Solar	2/1/2024	2/1/2024	2/29/2024	NM	N/A	5	8794-NM-02-2024-2DE022E4-1 to 5
NM RPS Active	9aa7ddf2-4ffc	W8835	EPENMAGG1S NM105S	EPENMAGG1S NM105S	Solar	2/1/2024	2/1/2024	2/29/2024	NM	N/A	3	8835-NM-02-2024-980546EF-1 to 3
NM RPS Active	9aa7ddf2-4ffc	W8836	EPENMAGG1S NM106S	EPENMAGG1S NM106S	Solar	2/1/2024	2/1/2024	2/29/2024	NM	N/A	3	8836-NM-02-2024-BFE8E8BD-1 to 3
NM RPS Active	9aa7ddf2-4ffc	W9324	EPENMAGG1S NM107S	EPENMAGG1S NM107S	Solar	2/1/2024	2/1/2024	2/29/2024	NM	N/A	2	9324-NM-02-2024-530254AC-1 to 2
NM RPS Active	9aa7ddf2-4ffc	W9325	EPENMAGG1S NM108S	EPENMAGG1S NM108S	Solar	2/1/2024	2/1/2024	2/29/2024	NM	N/A	2	9325-NM-02-2024-3B3B6193-1 to 2
NM RPS Active	9aa7ddf2-4ffc	W9344	EPENMAGG1S NM109S	EPENMAGG1S NM109S	Solar	2/1/2024	2/1/2024	2/29/2024	NM	N/A	4	9344-NM-02-2024-3E553C14-1 to 4
NM RPS Active	9aa7ddf2-4ffc	W9345	EPENMAGG1S NM110S	EPENMAGG1S NM110S	Solar	2/1/2024	2/1/2024	2/29/2024	NM	N/A	3	9345-NM-02-2024-388B84B3-1 to 3
NM RPS Active	9aa7ddf2-4ffc	W9602	EPENMAGG1S NM111S	EPENMAGG1S NM111S	Solar	2/1/2024	2/1/2024	2/29/2024	NM	N/A	5	9602-NM-02-2024-B8C68B39-1 to 5
NM RPS Active	9aa7ddf2-4ffc	W9603	EPENMAGG1S NM112S	EPENMAGG1S NM112S	Solar	2/1/2024	2/1/2024	2/29/2024	NM	N/A	2	9603-NM-02-2024-8F93A636-1 to 2
NM RPS Active	9aa7ddf2-4ffc	W10025	EPENMAGG1S NM113S	EPENMAGG1S NM113S	Solar	2/1/2024	2/1/2024	2/29/2024	NM	N/A	3	10025-NM-02-2024-A7C0DB9C-1 to 3
NM RPS Active	9aa7ddf2-4ffc	W10026	EPENMAGG1S NM114S	EPENMAGG1S NM114S	Solar	2/1/2024	2/1/2024	2/29/2024	NM	N/A	2	10026-NM-02-2024-693BAC5C-1 to 2
NM RPS Active	9aa7ddf2-4ffc	W10027	EPENMAGG1S NM115S	EPENMAGG1S NM115S	Solar	2/1/2024	2/1/2024	2/29/2024	NM	N/A	2	10027-NM-02-2024-13F31270-1 to 2
NM RPS Active	9aa7ddf2-4ffc	W10105	EPENMAGG1S NM116S	EPENMAGG1S NM116S	Solar	2/1/2024	2/1/2024	2/29/2024	NM	N/A	2	10105-NM-02-2024-6096AD94-1 to 2
NM RPS Active	9aa7ddf2-4ffc	W10106	EPENMAGG1S NM117S	EPENMAGG1S NM117S	Solar	2/1/2024	2/1/2024	2/29/2024	NM	N/A	3	10106-NM-02-2024-9C858B0A-1 to 3
NM RPS Active	9aa7ddf2-4ffc	W10107	EPENMAGG1S NM118S	EPENMAGG1S NM118S	Solar	2/1/2024	2/1/2024	2/29/2024	NM	N/A	3	10107-NM-02-2024-60F0D5AB-1 to 3
NM RPS Active	9aa7ddf2-4ffc	W10167	EPENMAGG1S NM119S	EPENMAGG1S NM119S	Solar	2/1/2024	2/1/2024	2/29/2024	NM	N/A	3	10167-NM-02-2024-CBE39F12-1 to 3
NM RPS Active	9aa7ddf2-4ffc	W10460	EPENMAGG1S NM121S	EPENMAGG1S NM121S	Solar	2/1/2024	2/1/2024	2/29/2024	NM	N/A	4	10460-NM-02-2024-8ED2881D-1 to 4
NM RPS Active	9aa7ddf2-4ffc	W10461	EPENMAGG1S NM122S	EPENMAGG1S NM122S	Solar	2/1/2024	2/1/2024	2/29/2024	NM	N/A	2	10461-NM-02-2024-960F9C4C-1 to 2
NM RPS Active	9aa7ddf2-4ffc	W10695	EPENMAGG1S NM124S	EPENMAGG1S NM124S	Solar	2/1/2024	2/1/2024	2/29/2024	NM	N/A	3	10695-NM-02-2024-94DEB43C-1 to 3
NM RPS Active	9aa7ddf2-4ffc	W10800	EPENMAGG1S NM125S	EPENMAGG1S NM125S	Solar	2/1/2024	2/1/2024	2/29/2024	NM	N/A	2	10800-NM-02-2024-FA8B9CB8-1 to 2
NM RPS Active	9aa7ddf2-4ffc	W10820	EPENMAGG1S NM126S	EPENMAGG1S NM126S	Solar	2/1/2024	2/1/2024	2/29/2024	NM	N/A	2	10820-NM-02-2024-77E1EB3F-1 to 2
NM RPS Active	9aa7ddf2-4ffc	W10821	EPENMAGG1S NM127S	EPENMAGG1S NM127S	Solar	2/1/2024	2/1/2024	2/29/2024	NM	N/A	2	10821-NM-02-2024-DDE10D94-1 to 2
NM RPS Active	9aa7ddf2-4ffc	W10867	EPENMAGG1S NM128S	EPENMAGG1S NM128S	Solar	2/1/2024	2/1/2024	2/29/2024	NM	N/A	2	10867-NM-02-2024-321A944C-1 to 2
NM RPS Active	9aa7ddf2-4ffc	W10868	EPENMAGG1S NM129S	EPENMAGG1S NM129S	Solar	2/1/2024	2/1/2024	2/29/2024	NM	N/A	2	10868-NM-02-2024-D6324AD8-1 to 2
NM RPS Active	9aa7ddf2-4ffc	W10925	EPENMAGG1S NM131S	EPENMAGG1S NM131S	Solar	2/1/2024	2/1/2024	2/29/2024	NM	N/A	2	10925-NM-02-2024-7148C04C-1 to 2
NM RPS Active	9aa7ddf2-4ffc	W10926	EPENMAGG1S NM132S	EPENMAGG1S NM132S	Solar	2/1/2024	2/1/2024	2/29/2024	NM	N/A	1	10926-NM-02-2024-E58E0BEA-1 to 1
NM RPS Active	9aa7ddf2-4ffc	W11361	EPENMAGG1S NM133S	EPENMAGG1S NM133S	Solar	2/1/2024	2/1/2024	2/29/2024	NM	N/A	2	11361-NM-02-2024-298393C0-1 to 2
NM RPS Active	9aa7ddf2-4ffc	W11363	EPENMAGG1S NM135S	EPENMAGG1S NM135S	Solar	2/1/2024	2/1/2024	2/29/2024	NM	N/A	3	11363-NM-02-2024-4B04E8EC-1 to 3
NM RPS Active	9aa7ddf2-4ffc	W11374	EPENMAGG1S NM136S	EPENMAGG1S NM136S	Solar	2/1/2024	2/1/2024	2/29/2024	NM	N/A	2	11374-NM-02-2024-3ACA866C-1 to 2
NM RPS Active	9aa7ddf2-4ffc	W11375	EPENMAGG1S NM137S	EPENMAGG1S NM137S	Solar	2/1/2024	2/1/2024	2/29/2024	NM	N/A	6	11375-NM-02-2024-A248A45E-1 to 6
NM RPS Active	9aa7ddf2-4ffc	W11377	EPENMAGG1S NM138S	EPENMAGG1S NM138S	Solar	2/1/2024	2/1/2024	2/29/2024	NM	N/A	4	11377-NM-02-2024-F2879489-1 to 4
NM RPS Active	9aa7ddf2-4ffc	W11378	EPENMAGG1S NM139S	EPENMAGG1S NM139S	Solar	2/1/2024	2/1/2024	2/29/2024	NM	N/A	5	11378-NM-02-2024-7B8CAC77-1 to 5
NM RPS Active	9aa7ddf2-4ffc	W11379	EPENMAGG1S NM140S	EPENMAGG1S NM140S	Solar	2/1/2024	2/1/2024	2/29/2024	NM	N/A	6	11379-NM-02-2024-40C8D408-1 to 6
NM RPS Active	9aa7ddf2-4ffc	W11381	EPENMAGG1S NM141S	EPENMAGG1S NM141S	Solar	2/1/2024	2/1/2024	2/29/2024	NM	N/A	4	11381-NM-02-2024-8AE4AA77-1 to 4

Account	Account ID	WREGIS GU ID	Unit Name	Facility Name	Fuel Type	Vintage	Generation Start Date	Generation End Date	Generator Location	Eligility	Quantity (RECs)	Serial Numbers
NM RPS Active	9aa7ddf2-4ffc	W11382	EPENMAGG1S NM142S	EPENMAGG1S NM142S	Solar	2/1/2024	2/1/2024	2/29/2024	NM	N/A	4	11382-NM-02-2024-E0A4E2F3-1 to 4
NM RPS Active	9aa7ddf2-4ffc	W11383	EPENMAGG1S NM143S	EPENMAGG1S NM143S	Solar	2/1/2024	2/1/2024	2/29/2024	NM	N/A	3	11383-NM-02-2024-9364455B-1 to 3
NM RPS Active	9aa7ddf2-4ffc	W11384	EPENMAGG1S NM144S	EPENMAGG1S NM144S	Solar	2/1/2024	2/1/2024	2/29/2024	NM	N/A	4	11384-NM-02-2024-54BBE3E4-1 to 4
NM RPS Active	9aa7ddf2-4ffc	W11968	EPENMAGG1S NM145S	EPENMAGG1S NM145S	Solar	2/1/2024	2/1/2024	2/29/2024	NM	N/A	4	11968-NM-02-2024-4DCA8A2B-1 to 4
NM RPS Active	9aa7ddf2-4ffc	W11969	EPENMAGG1S NM146S	EPENMAGG1S NM146S	Solar	2/1/2024	2/1/2024	2/29/2024	NM	N/A	5	11969-NM-02-2024-89B4268C-1 to 5
NM RPS Active	9aa7ddf2-4ffc	W11970	EPENMAGG1S NM147S	EPENMAGG1S NM147S	Solar	2/1/2024	2/1/2024	2/29/2024	NM	N/A	6	11970-NM-02-2024-5331CC55-1 to 6
NM RPS Active	9aa7ddf2-4ffc	W11972	EPENMAGG1S NM149S	EPENMAGG1S NM149S	Solar	2/1/2024	2/1/2024	2/29/2024	NM	N/A	3	11972-NM-02-2024-7F63B06B-1 to 3
NM RPS Active	9aa7ddf2-4ffc	W11973	EPENMAGG1S NM150S	EPENMAGG1S NM150S	Solar	2/1/2024	2/1/2024	2/29/2024	NM	N/A	5	11973-NM-02-2024-59837666-1 to 5
NM RPS Active	9aa7ddf2-4ffc	W11974	EPENMAGG1S NM151S	EPENMAGG1S NM151S	Solar	2/1/2024	2/1/2024	2/29/2024	NM	N/A	3	11974-NM-02-2024-AD4FC834-1 to 3
NM RPS Active	9aa7ddf2-4ffc	W11975	EPENMAGG1S NM152S	EPENMAGG1S NM152S	Solar	2/1/2024	2/1/2024	2/29/2024	NM	N/A	3	11975-NM-02-2024-B73D1676-1 to 3
NM RPS Active	9aa7ddf2-4ffc	W11976	EPENMAGG1S NM153S	EPENMAGG1S NM153S	Solar	2/1/2024	2/1/2024	2/29/2024	NM	N/A	6	11976-NM-02-2024-AB8621CB-1 to 6
NM RPS Active	9aa7ddf2-4ffc	W11977	EPENMAGG1S NM154S	EPENMAGG1S NM154S	Solar	2/1/2024	2/1/2024	2/29/2024	NM	N/A	3	11977-NM-02-2024-838AF573-1 to 3
NM RPS Active	9aa7ddf2-4ffc	W11980	EPENMAGG1S NM156S	EPENMAGG1S NM156S	Solar	2/1/2024	2/1/2024	2/29/2024	NM	N/A	5	11980-NM-02-2024-4EE38FAD-1 to 5
NM RPS Active	9aa7ddf2-4ffc	W11981	EPENMAGG1S NM157S	EPENMAGG1S NM157S	Solar	2/1/2024	2/1/2024	2/29/2024	NM	N/A	4	11981-NM-02-2024-D052C8A2-1 to 4
NM RPS Active	9aa7ddf2-4ffc	W11982	EPENMAGG1S NM158S	EPENMAGG1S NM158S	Solar	2/1/2024	2/1/2024	2/29/2024	NM	N/A	3	11982-NM-02-2024-0103AD1A-1 to 3
NM RPS Active	9aa7ddf2-4ffc	W11984	EPENMAGG1S NM159S	EPENMAGG1S NM159S	Solar	2/1/2024	2/1/2024	2/29/2024	NM	N/A	3	11984-NM-02-2024-3ADCF1C2-1 to 3
NM RPS Active	9aa7ddf2-4ffc	W12098	EPENMAGG1S NM160S	EPENMAGG1S NM160S	Solar	2/1/2024	2/1/2024	2/29/2024	NM	N/A	4	12098-NM-02-2024-21879CF9-1 to 4
NM RPS Active	9aa7ddf2-4ffc	W12099	EPENMAGG1S NM161S	EPENMAGG1S NM161S	Solar	2/1/2024	2/1/2024	2/29/2024	NM	N/A	4	12099-NM-02-2024-6CC6661A-1 to 4
NM RPS Active	9aa7ddf2-4ffc	W12100	EPENMAGG1S NM162S	EPENMAGG1S NM162S	Solar	2/1/2024	2/1/2024	2/29/2024	NM	N/A	6	12100-NM-02-2024-93CA0DC4-1 to 6
NM RPS Active	9aa7ddf2-4ffc	W12101	EPENMAGG1S NM163S	EPENMAGG1S NM163S	Solar	2/1/2024	2/1/2024	2/29/2024	NM	N/A	3	12101-NM-02-2024-B4E7A6F5-1 to 3
NM RPS Active	9aa7ddf2-4ffc	W12188	EPENMAGG1S NM164S	EPENMAGG1S NM164S	Solar	2/1/2024	2/1/2024	2/29/2024	NM	N/A	4	12188-NM-02-2024-31F26954-1 to 4
NM RPS Active	9aa7ddf2-4ffc	W12257	EPENMAGG1S NM166S	EPENMAGG1S NM166S	Solar	2/1/2024	2/1/2024	2/29/2024	NM	N/A	1	12257-NM-02-2024-E9708479-1 to 1
NM RPS Active	9aa7ddf2-4ffc	W12260	EPENMAGG1S NM168S	EPENMAGG1S NM168S	Solar	2/1/2024	2/1/2024	2/29/2024	NM	N/A	3	12260-NM-02-2024-507D6B07-1 to 3
NM RPS Active	9aa7ddf2-4ffc	W12643	EPENMAGG1S NM170S	EPENMAGG1S NM170S	Solar	2/1/2024	2/1/2024	2/29/2024	NM	N/A	6	12643-NM-02-2024-9C07CCC5-1 to 6
NM RPS Active	9aa7ddf2-4ffc	W12646	EPENMAGG1S NM173S	EPENMAGG1S NM173S	Solar	2/1/2024	2/1/2024	2/29/2024	NM	N/A	5	12646-NM-02-2024-9C6AC71D-1 to 5
NM RPS Active	9aa7ddf2-4ffc	W12651	EPENMAGG1S NM176S	EPENMAGG1S NM176S	Solar	2/1/2024	2/1/2024	2/29/2024	NM	N/A	5	12651-NM-02-2024-821DB94A-1 to 5
NM RPS Active	9aa7ddf2-4ffc	W12702	EPENMAGG1S NM177S	EPENMAGG1S NM177S	Solar	2/1/2024	2/1/2024	2/29/2024	NM	N/A	6	12702-NM-02-2024-C2A113B0-1 to 6
NM RPS Active	9aa7ddf2-4ffc	W12703	EPENMAGG1S NM178S	EPENMAGG1S NM178S	Solar	2/1/2024	2/1/2024	2/29/2024	NM	N/A	5	12703-NM-02-2024-513B711F-1 to 5
NM RPS Active	9aa7ddf2-4ffc	W12704	EPENMAGG1S NM179S	EPENMAGG1S NM179S	Solar	2/1/2024	2/1/2024	2/29/2024	NM	N/A	6	12704-NM-02-2024-A0272902-1 to 6
NM RPS Active	9aa7ddf2-4ffc	W12744	EPENMAGG1S NM180S	EPENMAGG1S NM180S	Solar	2/1/2024	2/1/2024	2/29/2024	NM	N/A	6	12744-NM-02-2024-1AA8FD2F-1 to 6
NM RPS Active	9aa7ddf2-4ffc	W12745	EPENMAGG1S NM181S	EPENMAGG1S NM181S	Solar	2/1/2024	2/1/2024	2/29/2024	NM	N/A	4	12745-NM-02-2024-8FBFC4FE-1 to 4
NM RPS Active	9aa7ddf2-4ffc	W13207	EPENMAGG1S NM182S	EPENMAGG1S NM182S	Solar	2/1/2024	2/1/2024	2/29/2024	NM	N/A	4	13207-NM-02-2024-B69B4ED3-1 to 4
NM RPS Active	9aa7ddf2-4ffc	W13208	EPENMAGG1S NM183S	EPENMAGG1S NM183S	Solar	2/1/2024	2/1/2024	2/29/2024	NM	N/A	5	13208-NM-02-2024-71BF89E9-1 to 5
NM RPS Active	9aa7ddf2-4ffc	W13211	EPENMAGG1S NM185S	EPENMAGG1S NM185S	Solar	2/1/2024	2/1/2024	2/29/2024	NM	N/A	5	13211-NM-02-2024-1FEF4DD7-1 to 5
NM RPS Active	9aa7ddf2-4ffc	W13615	EPENMAGG1S NM186S	EPENMAGG1S NM186S	Solar	2/1/2024	2/1/2024	2/29/2024	NM	N/A	3	13615-NM-02-2024-8566BC81-1 to 3
NM RPS Active	9aa7ddf2-4ffc	W13616	EPENMAGG1S NM187S	EPENMAGG1S NM187S	Solar	2/1/2024	2/1/2024	2/29/2024	NM	N/A	4	13616-NM-02-2024-00EB1903-1 to 4
NM RPS Active	9aa7ddf2-4ffc	W13701	EPENMAGG1S NM188S	EPENMAGG1S NM188S	Solar	2/1/2024	2/1/2024	2/29/2024	NM	N/A	3	13701-NM-02-2024-DDE23B6D-1 to 3
NM RPS Active	9aa7ddf2-4ffc	W13702	EPENMAGG1S NM189S	EPENMAGG1S NM189S	Solar	2/1/2024	2/1/2024	2/29/2024	NM	N/A	5	13702-NM-02-2024-C1A45EBF-1 to 5
NM RPS Active	9aa7ddf2-4ffc	W13799	EPENMAGG1S NM190S	EPENMAGG1S NM190S	Solar	2/1/2024	2/1/2024	2/29/2024	NM	N/A	5	13799-NM-02-2024-E159A0B0-1 to 5
NM RPS Active	9aa7ddf2-4ffc	W13801	EPENMAGG1S NM191S	EPENMAGG1S NM191S	Solar	2/1/2024	2/1/2024	2/29/2024	NM	N/A	3	13801-NM-02-2024-9D1F7B8C-1 to 3
NM RPS Active	9aa7ddf2-4ffc	W13802	EPENMAGG1S NM192S	EPENMAGG1S NM192S	Solar	2/1/2024	2/1/2024	2/29/2024	NM	N/A	5	13802-NM-02-2024-BB887170-1 to 5
NM RPS Active	9aa7ddf2-4ffc	W13803	EPENMAGG1S NM193S	EPENMAGG1S NM193S	Solar	2/1/2024	2/1/2024	2/29/2024	NM	N/A	5	13803-NM-02-2024-4279A3C9-1 to 5
NM RPS Active	9aa7ddf2-4ffc	W13804	EPENMAGG1S NM194S	EPENMAGG1S NM194S	Solar	2/1/2024	2/1/2024	2/29/2024	NM	N/A	3	13804-NM-02-2024-4AA88CD2-1 to 3
NM RPS Active	9aa7ddf2-4ffc	W13897	EPENMAGG1S NM195S	EPENMAGG1S NM195S	Solar	2/1/2024	2/1/2024	2/29/2024	NM	N/A	4	13897-NM-02-2024-EE767FFE-1 to 4
NM RPS Active	9aa7ddf2-4ffc	W13898	EPENMAGG1S NM196S	EPENMAGG1S NM196S	Solar	2/1/2024	2/1/2024	2/29/2024	NM	N/A	4	13898-NM-02-2024-8A43E5DE-1 to 4
NM RPS Active	9aa7ddf2-4ffc	W13972	EPENMAGG1S NM197S	EPENMAGG1S NM197S	Solar	2/1/2024	2/1/2024	2/29/2024	NM	N/A	3	13972-NM-02-2024-4E0D5AB2-1 to 3
NM RPS Active	9aa7ddf2-4ffc	W13973	EPENMAGG1S NM198S	EPENMAGG1S NM198S	Solar	2/1/2024	2/1/2024	2/29/2024	NM	N/A	6	13973-NM-02-2024-722EC4BA-1 to 6
NM RPS Active	9aa7ddf2-4ffc	W13975	EPENMAGG1S NM199S	EPENMAGG1S NM199S	Solar	2/1/2024	2/1/2024	2/29/2024	NM	N/A	4	13975-NM-02-2024-6531A9A1-1 to 4
NM RPS Active	9aa7ddf2-4ffc	W14044	EPENMAGG1S NM200S	EPENMAGG1S NM200S	Solar	2/1/2024	2/1/2024	2/29/2024	NM	N/A	3	14044-NM-02-2024-D5A63188-1 to 3
NM RPS Active	9aa7ddf2-4ffc	W14045	EPENMAGG1S NM201S	EPENMAGG1S NM201S	Solar	2/1/2024	2/1/2024	2/29/2024	NM	SMUD	5	14045-NM-02-2024-B1FBC9E6-1 to 5
NM RPS Active	9aa7ddf2-4ffc	W14046	EPENMAGG1S NM202S	EPENMAGG1S NM202S	Solar	2/1/2024	2/1/2024	2/29/2024	NM	N/A	2	14046-NM-02-2024-E60438C4-1 to 2
NM RPS Active	9aa7ddf2-4ffc	W14049	EPENMAGG1S NM204S	EPENMAGG1S NM204S	Solar	2/1/2024	2/1/2024	2/29/2024	NM	SMUD	4	14049-NM-02-2024-7B31514A-1 to 4
NM RPS Active	9aa7ddf2-4ffc	W14225	N/A	EPENMAGG1S NM205S	Solar	2/1/2024	2/1/2024	2/29/2024	NM	N/A	4	14225-NM-02-2024-F895F7B7-1 to 4
NM RPS Active	9aa7ddf2-4ffc	W14230	N/A	EPENMAGG1S NM206S	Solar	2/1/2024	2/1/2024	2/29/2024	NM	N/A	5	14230-NM-02-2024-53DC1AF7-1 to 5
NM RPS Active	9aa7ddf2-4ffc	W14334	N/A	EPENMAGG1S NM207S	Solar	2/1/2024	2/1/2024	2/29/2024	NM	N/A	5	14334-NM-02-2024-E5691694-1 to 5
NM RPS Active	9aa7ddf2-4ffc	W15470	N/A	EPENMAGG1S NM208S	Solar	2/1/2024	2/1/2024	2/29/2024	NM	N/A	5	15470-NM-02-2024-967A5A94-1 to 5
NM RPS Active	9aa7ddf2-4ffc	W15471	N/A	EPENMAGG1S NM209S	Solar	2/1/2024	2/1/2024	2/29/2024	NM	N/A	3	15471-NM-02-2024-2D3A8044-1 to 3
NM RPS Active	9aa7ddf2-4ffc	W15472	N/A	EPENMAGG1S NM210S	Solar	2/1/2024	2/1/2024	2/29/2024	NM	N/A	4	15472-NM-02-2024-BB5D2E80-1 to 4

Account	Account ID	WREGIS GU ID	Unit Name	Facility Name	Fuel Type	Vintage	Generation Start Date	Generation End Date	Generator Location	Eligility	Quantity (RECs)	Serial Numbers
NM RPS Active	9aa7ddf2-4ffc	W15473	N/A	EPENMAGG1S NM211S	Solar	2/1/2024	2/1/2024	2/29/2024	NM	N/A	3	15473-NM-02-2024-CCE48ECB-1 to 3
NM RPS Active	9aa7ddf2-4ffc	W15474	N/A	EPENMAGG1S NM212S	Solar	2/1/2024	2/1/2024	2/29/2024	NM	N/A	3	15474-NM-02-2024-B44A1A4F-1 to 3
NM RPS Active	9aa7ddf2-4ffc	W15475	N/A	EPENMAGG1S NM213S	Solar	2/1/2024	2/1/2024	2/29/2024	NM	N/A	7	15475-NM-02-2024-B68CBFF1-1 to 7
NM RPS Active	9aa7ddf2-4ffc	W15517	N/A	EPENMAGG1S NM214S	Solar	2/1/2024	2/1/2024	2/29/2024	NM	N/A	5	15517-NM-02-2024-AB80C8AE-1 to 5
NM RPS Active	9aa7ddf2-4ffc	W15518	N/A	EPENMAGG1S NM215S	Solar	2/1/2024	2/1/2024	2/29/2024	NM	N/A	4	15518-NM-02-2024-AF72C3B0-1 to 4
NM RPS Active	9aa7ddf2-4ffc	W15519	N/A	EPENMAGG1S NM216S	Solar	2/1/2024	2/1/2024	2/29/2024	NM	N/A	5	15519-NM-02-2024-3663DF10-1 to 5
NM RPS Active	9aa7ddf2-4ffc	W15520	N/A	EPENMAGG1S NM217S	Solar	2/1/2024	2/1/2024	2/29/2024	NM	N/A	4	15520-NM-02-2024-F35A226B-1 to 4
NM RPS Active	9aa7ddf2-4ffc	W15521	N/A	EPENMAGG1S NM218S	Solar	2/1/2024	2/1/2024	2/29/2024	NM	N/A	3	15521-NM-02-2024-A546F530-1 to 3
NM RPS Active	9aa7ddf2-4ffc	W15533	N/A	EPENMAGG1S NM219S	Solar	2/1/2024	2/1/2024	2/29/2024	NM	N/A	5	15533-NM-02-2024-204E3450-1 to 5
NM RPS Active	9aa7ddf2-4ffc	W15702	N/A	EPENMAGG1S NM220S	Solar	2/1/2024	2/1/2024	2/29/2024	NM	N/A	4	15702-NM-02-2024-4381EB4E-1 to 4
NM RPS Active	9aa7ddf2-4ffc	W15703	N/A	EPENMAGG1S NM221S	Solar	2/1/2024	2/1/2024	2/29/2024	NM	N/A	5	15703-NM-02-2024-4FAF1993-1 to 5
NM RPS Active	9aa7ddf2-4ffc	W15704	N/A	EPENMAGG1S NM222S	Solar	2/1/2024	2/1/2024	2/29/2024	NM	N/A	3	15704-NM-02-2024-FFEC4AC2-1 to 3
NM RPS Active	9aa7ddf2-4ffc	W15705	N/A	EPENMAGG1S NM223S	Solar	2/1/2024	2/1/2024	2/29/2024	NM	N/A	4	15705-NM-02-2024-B91B9CA1-1 to 4
NM RPS Active	9aa7ddf2-4ffc	W16065	N/A	EPENMAGG1S NM224S	Solar	2/1/2024	2/1/2024	2/29/2024	NM	N/A	5	16065-NM-02-2024-07EE9247-1 to 5
NM RPS Active	9aa7ddf2-4ffc	W16066	N/A	EPENMAGG1S NM225S	Solar	2/1/2024	2/1/2024	2/29/2024	NM	N/A	6	16066-NM-02-2024-A5942C48-1 to 6
NM RPS Active	9aa7ddf2-4ffc	W16067	N/A	EPENMAGG1S NM226S	Solar	2/1/2024	2/1/2024	2/29/2024	NM	N/A	4	16067-NM-02-2024-2FDBF73D-1 to 4
NM RPS Active	9aa7ddf2-4ffc	W16490	N/A	EPENMAGG1S NM227S	Solar	2/1/2024	2/1/2024	2/29/2024	NM	N/A	3	16490-NM-02-2024-B45CFB08-1 to 3
NM RPS Active	9aa7ddf2-4ffc	W16492	N/A	EPENMAGG1S NM229S	Solar	2/1/2024	2/1/2024	2/29/2024	NM	N/A	6	16492-NM-02-2024-1A411481-1 to 6
NM RPS Active	9aa7ddf2-4ffc	W16493	N/A	EPENMAGG1S NM230S	Solar	2/1/2024	2/1/2024	2/29/2024	NM	N/A	6	16493-NM-02-2024-629E6A19-1 to 6
NM RPS Active	9aa7ddf2-4ffc	W16494	N/A	EPENMAGG1S NM231S	Solar	2/1/2024	2/1/2024	2/29/2024	NM	N/A	2	16494-NM-02-2024-99CF26F0-1 to 2
NM RPS Active	9aa7ddf2-4ffc	W17425	N/A	EPENMAGG1S NM232S	Solar	2/1/2024	2/1/2024	2/29/2024	NM	N/A	4	17425-NM-02-2024-6BEC682C-1 to 4
NM RPS Active	9aa7ddf2-4ffc	W17426	N/A	EPENMAGG1S NM233S	Solar	2/1/2024	2/1/2024	2/29/2024	NM	N/A	6	17426-NM-02-2024-BF256CA0-1 to 6
NM RPS Active	9aa7ddf2-4ffc	W17427	N/A	EPENMAGG1S NM235S	Solar	2/1/2024	2/1/2024	2/29/2024	NM	N/A	5	17427-NM-02-2024-3EB10EC9-1 to 5
NM RPS Active	9aa7ddf2-4ffc	W17428	N/A	EPENMAGG1S NM236S	Solar	2/1/2024	2/1/2024	2/29/2024	NM	N/A	4	17428-NM-02-2024-2A430DE1-1 to 4
NM RPS Active	9aa7ddf2-4ffc	W17429	N/A	EPENMAGG1S NM237S	Solar	2/1/2024	2/1/2024	2/29/2024	NM	N/A	5	17429-NM-02-2024-7AD094A7-1 to 5
NM RPS Active	9aa7ddf2-4ffc	W17430	N/A	EPENMAGG1S NM238S	Solar	2/1/2024	2/1/2024	2/29/2024	NM	N/A	6	17430-NM-02-2024-92FF6C0A-1 to 6
NM RPS Active	9aa7ddf2-4ffc	W17431	N/A	EPENMAGG1S NM239S	Solar	2/1/2024	2/1/2024	2/29/2024	NM	N/A	4	17431-NM-02-2024-9BC60D11-1 to 4
NM RPS Active	9aa7ddf2-4ffc	W17432	N/A	EPENMAGG1S NM240S	Solar	2/1/2024	2/1/2024	2/29/2024	NM	N/A	6	17432-NM-02-2024-0AF0BEA9-1 to 6
NM RPS Active	9aa7ddf2-4ffc	W17433	N/A	EPENMAGG1S NM241S	Solar	2/1/2024	2/1/2024	2/29/2024	NM	N/A	6	17433-NM-02-2024-365B6FFD-1 to 6
NM RPS Active	9aa7ddf2-4ffc	W17434	N/A	EPENMAGG1S NM242S	Solar	2/1/2024	2/1/2024	2/29/2024	NM	N/A	3	17434-NM-02-2024-3CDD0E94-1 to 3
NM RPS Active	9aa7ddf2-4ffc	W17435	N/A	EPENMAGG1S NM243S	Solar	2/1/2024	2/1/2024	2/29/2024	NM	N/A	6	17435-NM-02-2024-3A012BD9-1 to 6
NM RPS Active	9aa7ddf2-4ffc	W17436	N/A	EPENMAGG1S NM244S	Solar	2/1/2024	2/1/2024	2/29/2024	NM	N/A	8	17436-NM-02-2024-2D9AD001-1 to 8
NM RPS Active	9aa7ddf2-4ffc	W17546	N/A	EPENMAGG1S NM245S	Solar	2/1/2024	2/1/2024	2/29/2024	NM	N/A	4	17546-NM-02-2024-19EAD17E-1 to 4
NM RPS Active	9aa7ddf2-4ffc	W17824	N/A	EPENMAGG1S NM246S	Solar	2/1/2024	2/1/2024	2/29/2024	NM	N/A	6	17824-NM-02-2024-1ED60274-1 to 6
NM RPS Active	9aa7ddf2-4ffc	W17825	N/A	EPENMAGG1S NM247S	Solar	2/1/2024	2/1/2024	2/29/2024	NM	N/A	3	17825-NM-02-2024-DE0664D6-1 to 3
NM RPS Active	9aa7ddf2-4ffc	W18165	N/A	EPENMAGG1S NM248S	Solar	2/1/2024	2/1/2024	2/29/2024	NM	N/A	1	18165-NM-02-2024-CED43DFD-1 to 1
NM RPS Active	9aa7ddf2-4ffc	W18166	N/A	EPENMAGG1S NM249S	Solar	2/1/2024	2/1/2024	2/29/2024	NM	N/A	1	18166-NM-02-2024-066099A2-1 to 1
NM RPS Active	9aa7ddf2-4ffc	W18167	N/A	EPENMAGG1S NM250S	Solar	2/1/2024	2/1/2024	2/29/2024	NM	N/A	1	18167-NM-02-2024-3FA4E52E-1 to 1
NM RPS Active	9aa7ddf2-4ffc	W18279	N/A	EPENMAGG1S NM251S	Solar	2/1/2024	2/1/2024	2/29/2024	NM	N/A	2	18279-NM-02-2024-D58CEC7A-1 to 2
NM RPS Active	9aa7ddf2-4ffc	W12650	EPE NM175S - City of Las Cruces - Utilities - Waste Water	EPE NM175S	Solar	3/1/2024	3/1/2024	3/31/2024	NM	N/A	9	12650-NM-03-2024-A6F2821B-1 to 9
NM RPS Active	9aa7ddf2-4ffc	W3622	EPENMAGG1S NM001S	EPENMAGG1S NM001S	Solar	3/1/2024	3/1/2024	3/31/2024	NM	N/A	5	3622-NM-03-2024-D491F42B-1 to 5
NM RPS Active	9aa7ddf2-4ffc	W3624	EPENMAGG1S NM002S	EPENMAGG1S NM002S	Solar	3/1/2024	3/1/2024	3/31/2024	NM	N/A	4	3624-NM-03-2024-EC9CCBF8-1 to 4
NM RPS Active	9aa7ddf2-4ffc	W3637	EPENMAGG1S NM003S	EPENMAGG1S NM003S	Solar	3/1/2024	3/1/2024	3/31/2024	NM	N/A	8	3637-NM-03-2024-5BEAB114-1 to 8
NM RPS Active	9aa7ddf2-4ffc	W3638	EPENMAGG1S NM004S	EPENMAGG1S NM004S	Solar	3/1/2024	3/1/2024	3/31/2024	NM	N/A	5	3638-NM-03-2024-1F75F907-1 to 5
NM RPS Active	9aa7ddf2-4ffc	W3639	EPENMAGG1s NM005S	EPENMAGG1s NM005S	Solar	3/1/2024	3/1/2024	3/31/2024	NM	N/A	8	3639-NM-03-2024-CFC7B8C4-1 to 8
NM RPS Active	9aa7ddf2-4ffc	W3641	EPENMAGG1s NM007S	EPENMAGG1s NM007S	Solar	3/1/2024	3/1/2024	3/31/2024	NM	N/A	3	3641-NM-03-2024-7BC9530A-1 to 3
NM RPS Active	9aa7ddf2-4ffc	W3642	EPENMAGG1s NM008S	EPENMAGG1s NM008S	Solar	3/1/2024	3/1/2024	3/31/2024	NM	N/A	4	3642-NM-03-2024-36F14620-1 to 4
NM RPS Active	9aa7ddf2-4ffc	W3643	EPENMAGG1s NM009S	EPENMAGG1s NM009S	Solar	3/1/2024	3/1/2024	3/31/2024	NM	N/A	5	3643-NM-03-2024-372B4551-1 to 5
NM RPS Active	9aa7ddf2-4ffc	W3644	EPENMAGG1S NM010S	EPENMAGG1S NM010S	Solar	3/1/2024	3/1/2024	3/31/2024	NM	N/A	8	3644-NM-03-2024-220E16EA-1 to 8
NM RPS Active	9aa7ddf2-4ffc	W3645	EPENMAGG1S NM011S	EPENMAGG1S NM011S	Solar	3/1/2024	3/1/2024	3/31/2024	NM	N/A	5	3645-NM-03-2024-C7CA2045-1 to 5
NM RPS Active	9aa7ddf2-4ffc	W3646	EPENMAGG1S NM012S	EPENMAGG1S NM012S	Solar	3/1/2024	3/1/2024	3/31/2024	NM	N/A	7	3646-NM-03-2024-AF874B42-1 to 7
NM RPS Active	9aa7ddf2-4ffc	W3647	EPENMAGG1S NM013S	EPENMAGG1S NM013S	Solar	3/1/2024	3/1/2024	3/31/2024	NM	N/A	4	3647-NM-03-2024-5B9C2F38-1 to 4
NM RPS Active	9aa7ddf2-4ffc	W3650	EPENMAGG1S NM016S	EPENMAGG1S NM016S	Solar	3/1/2024	3/1/2024	3/31/2024	NM	N/A	4	3650-NM-03-2024-8B0AE9E8-1 to 4
NM RPS Active	9aa7ddf2-4ffc	W3651	EPENMAGG1S NM017S	EPENMAGG1S NM017S	Solar	3/1/2024	3/1/2024	3/31/2024	NM	N/A	6	3651-NM-03-2024-D261F1CB-1 to 6
NM RPS Active	9aa7ddf2-4ffc	W3652	EPENMAGG1S NM018S	EPENMAGG1S NM018S	Solar	3/1/2024	3/1/2024	3/31/2024	NM	N/A	8	3652-NM-03-2024-5B8756CA-1 to 8
NM RPS Active	9aa7ddf2-4ffc	W3653	EPENMAGG1S NM019S	EPENMAGG1S NM019S	Solar	3/1/2024	3/1/2024	3/31/2024	NM	N/A	5	3653-NM-03-2024-B0296EC4-1 to 5

Account	Account ID	WREGIS GU ID	Unit Name	Facility Name	Fuel Type	Vintage	Generation Start Date	Generation End Date	Generator Location	Eligility	Quantity (RECs)	Serial Numbers
NM RPS Active	9aa7ddf2-4ffc	W3654	EPENMAGG1S NM020S	EPENMAGG1S NM020S	Solar	3/1/2024	3/1/2024	3/31/2024	NM	N/A	7	3654-NM-03-2024-C2BAE51A-1 to 7
NM RPS Active	9aa7ddf2-4ffc	W3655	EPENMAGG1S NM021S	EPENMAGG1S NM021S	Solar	3/1/2024	3/1/2024	3/31/2024	NM	N/A	7	3655-NM-03-2024-2779D440-1 to 7
NM RPS Active	9aa7ddf2-4ffc	W3656	EPENMAGG1S NM022S	EPENMAGG1S NM022S	Solar	3/1/2024	3/1/2024	3/31/2024	NM	N/A	7	3656-NM-03-2024-55B3C0F1-1 to 7
NM RPS Active	9aa7ddf2-4ffc	W3657	EPENMAGG1S NM023S	EPENMAGG1S NM023S	Solar	3/1/2024	3/1/2024	3/31/2024	NM	N/A	5	3657-NM-03-2024-A1BDFCDA-1 to 5
NM RPS Active	9aa7ddf2-4ffc	W3658	EPENMAGG1S NM024S	EPENMAGG1S NM024S	Solar	3/1/2024	3/1/2024	3/31/2024	NM	N/A	9	3658-NM-03-2024-44E25D46-1 to 9
NM RPS Active	9aa7ddf2-4ffc	W3659	EPENMAGG1S NM025S	EPENMAGG1S NM025S	Solar	3/1/2024	3/1/2024	3/31/2024	NM	N/A	8	3659-NM-03-2024-B9994A9E-1 to 8
NM RPS Active	9aa7ddf2-4ffc	W3660	EPENMAGG1S NM026S	EPENMAGG1S NM026S	Solar	3/1/2024	3/1/2024	3/31/2024	NM	N/A	7	3660-NM-03-2024-26040680-1 to 7
NM RPS Active	9aa7ddf2-4ffc	W3838	EPENMAGG1S NM027S	EPENMAGG1S NM027S	Solar	3/1/2024	3/1/2024	3/31/2024	NM	N/A	10	3838-NM-03-2024-B159A2A0-1 to 10
NM RPS Active	9aa7ddf2-4ffc	W3839	EPENMAGG1S NM028S	EPENMAGG1S NM028S	Solar	3/1/2024	3/1/2024	3/31/2024	NM	N/A	7	3839-NM-03-2024-61736B29-1 to 7
NM RPS Active	9aa7ddf2-4ffc	W3946	EPENMAGG1S NM029S	EPENMAGG1S NM029S	Solar	3/1/2024	3/1/2024	3/31/2024	NM	N/A	4	3946-NM-03-2024-3D58D785-1 to 4
NM RPS Active	9aa7ddf2-4ffc	W3947	EPENMAGG1S NM030S	EPENMAGG1S NM030S	Solar	3/1/2024	3/1/2024	3/31/2024	NM	N/A	3	3947-NM-03-2024-C89CB7A2-1 to 3
NM RPS Active	9aa7ddf2-4ffc	W3948	EPENMAGG1S NM031S	EPENMAGG1S NM031S	Solar	3/1/2024	3/1/2024	3/31/2024	NM	N/A	1	3948-NM-03-2024-8666BF24-1 to 1
NM RPS Active	9aa7ddf2-4ffc	W3949	EPENMAGG1S NM032S	EPENMAGG1S NM032S	Solar	3/1/2024	3/1/2024	3/31/2024	NM	N/A	5	3949-NM-03-2024-0EF14D06-1 to 5
NM RPS Active	9aa7ddf2-4ffc	W3950	EPENMAGG1S NM033S	EPENMAGG1S NM033S	Solar	3/1/2024	3/1/2024	3/31/2024	NM	N/A	1	3950-NM-03-2024-D924246A-1 to 1
NM RPS Active	9aa7ddf2-4ffc	W3951	EPENMAGG1S NM034S	EPENMAGG1S NM034S	Solar	3/1/2024	3/1/2024	3/31/2024	NM	N/A	1	3951-NM-03-2024-88791B97-1 to 1
NM RPS Active	9aa7ddf2-4ffc	W3952	EPENMAGG1S NM035S	EPENMAGG1S NM035S	Solar	3/1/2024	3/1/2024	3/31/2024	NM	N/A	8	3952-NM-03-2024-3CE80E70-1 to 8
NM RPS Active	9aa7ddf2-4ffc	W4101	EPENMAGG1S NM036S	EPENMAGG1S NM036S	Solar	3/1/2024	3/1/2024	3/31/2024	NM	N/A	6	4101-NM-03-2024-DEB27563-1 to 6
NM RPS Active	9aa7ddf2-4ffc	W4121	EPENMAGG1S NM037S	EPENMAGG1S NM037S	Solar	3/1/2024	3/1/2024	3/31/2024	NM	N/A	5	4121-NM-03-2024-C1305724-1 to 5
NM RPS Active	9aa7ddf2-4ffc	W4221	EPENMAGG1S NM038S	EPENMAGG1S NM038S	Solar	3/1/2024	3/1/2024	3/31/2024	NM	N/A	8	4221-NM-03-2024-91D5B68B-1 to 8
NM RPS Active	9aa7ddf2-4ffc	W4270	EPENMAGG1S NM039S	EPENMAGG1S NM039S	Solar	3/1/2024	3/1/2024	3/31/2024	NM	N/A	19	4270-NM-03-2024-2F15F6C9-1 to 19
NM RPS Active	9aa7ddf2-4ffc	W4341	EPENMAGG1S NM040S	EPENMAGG1S NM040S	Solar	3/1/2024	3/1/2024	3/31/2024	NM	N/A	2	4341-NM-03-2024-829690BF-1 to 2
NM RPS Active	9aa7ddf2-4ffc	W4412	EPENMAGG1S NM041S	EPENMAGG1S NM041S	Solar	3/1/2024	3/1/2024	3/31/2024	NM	N/A	5	4412-NM-03-2024-02E80559-1 to 5
NM RPS Active	9aa7ddf2-4ffc	W4437	EPENMAGG1S NM042S	EPENMAGG1S NM042S	Solar	3/1/2024	3/1/2024	3/31/2024	NM	N/A	7	4437-NM-03-2024-10CC4770-1 to 7
NM RPS Active	9aa7ddf2-4ffc	W4459	EPENMAGG1S NM043S	EPENMAGG1S NM043S	Solar	3/1/2024	3/1/2024	3/31/2024	NM	N/A	9	4459-NM-03-2024-DE3830D1-1 to 9
NM RPS Active	9aa7ddf2-4ffc	W4507	EPENMAGG1S NM044S	EPENMAGG1S NM044S	Solar	3/1/2024	3/1/2024	3/31/2024	NM	N/A	7	4507-NM-03-2024-207BE17B-1 to 7
NM RPS Active	9aa7ddf2-4ffc	W4649	EPENMAGG1S NM045S	EPENMAGG1S NM045S	Solar	3/1/2024	3/1/2024	3/31/2024	NM	N/A	8	4649-NM-03-2024-CFF28BD6-1 to 8
NM RPS Active	9aa7ddf2-4ffc	W4704	EPENMAGG1S NM046S	EPENMAGG1S NM046S	Solar	3/1/2024	3/1/2024	3/31/2024	NM	N/A	7	4704-NM-03-2024-FFE537F2-1 to 7
NM RPS Active	9aa7ddf2-4ffc	W4732	EPENMAGG1S NM047S	EPENMAGG1S NM047S	Solar	3/1/2024	3/1/2024	3/31/2024	NM	N/A	6	4732-NM-03-2024-8A180409-1 to 6
NM RPS Active	9aa7ddf2-4ffc	W4806	EPENMAGG1S NM048S	EPENMAGG1S NM048S	Solar	3/1/2024	3/1/2024	3/31/2024	NM	N/A	5	4806-NM-03-2024-335AE17B-1 to 5
NM RPS Active	9aa7ddf2-4ffc	W4833	EPENMAGG1S NM049S	EPENMAGG1S NM049S	Solar	3/1/2024	3/1/2024	3/31/2024	NM	N/A	6	4833-NM-03-2024-ACC986EA-1 to 6
NM RPS Active	9aa7ddf2-4ffc	W4842	EPENMAGG1S NM050S	EPENMAGG1S NM050S	Solar	3/1/2024	3/1/2024	3/31/2024	NM	N/A	4	4842-NM-03-2024-43DAB05F-1 to 4
NM RPS Active	9aa7ddf2-4ffc	W4843	EPENMAGG1S NM051S	EPENMAGG1S NM051S	Solar	3/1/2024	3/1/2024	3/31/2024	NM	N/A	6	4843-NM-03-2024-9BC6B4F4-1 to 6
NM RPS Active	9aa7ddf2-4ffc	W4961	EPENMAGG1S NM052S	EPENMAGG1S NM052S	Solar	3/1/2024	3/1/2024	3/31/2024	NM	N/A	6	4961-NM-03-2024-C9C6AD67-1 to 6
NM RPS Active	9aa7ddf2-4ffc	W5022	EPENMAGG1S NM053S	EPENMAGG1S NM053S	Solar	3/1/2024	3/1/2024	3/31/2024	NM	N/A	6	5022-NM-03-2024-E1C4C0CF-1 to 6
NM RPS Active	9aa7ddf2-4ffc	W5071	EPENMAGG1S NM054S	EPENMAGG1S NM054S	Solar	3/1/2024	3/1/2024	3/31/2024	NM	N/A	6	5071-NM-03-2024-BCD34722-1 to 6
NM RPS Active	9aa7ddf2-4ffc	W5080	EPENMAGG1S NM056S	EPENMAGG1S NM056S	Solar	3/1/2024	3/1/2024	3/31/2024	NM	N/A	10	5080-NM-03-2024-01960A37-1 to 10
NM RPS Active	9aa7ddf2-4ffc	W5111	EPENMAGG1S NM057S	EPENMAGG1S NM057S	Solar	3/1/2024	3/1/2024	3/31/2024	NM	N/A	7	5111-NM-03-2024-130B8FC1-1 to 7
NM RPS Active	9aa7ddf2-4ffc	W5112	EPENMAGG1S NM058S	EPENMAGG1S NM058S	Solar	3/1/2024	3/1/2024	3/31/2024	NM	N/A	7	5112-NM-03-2024-8CB5737E-1 to 7
NM RPS Active	9aa7ddf2-4ffc	W5280	EPENMAGG1S NM059S	EPENMAGG1S NM059S	Solar	3/1/2024	3/1/2024	3/31/2024	NM	N/A	5	5280-NM-03-2024-890F8748-1 to 5
NM RPS Active	9aa7ddf2-4ffc	W5318	EPENMAGG1S NM060S	EPENMAGG1S NM060S	Solar	3/1/2024	3/1/2024	3/31/2024	NM	SMUD	9	5318-NM-03-2024-0483BF77-1 to 9
NM RPS Active	9aa7ddf2-4ffc	W5320	EPENMAGG1S NM062S	EPENMAGG1S NM062S	Solar	3/1/2024	3/1/2024	3/31/2024	NM	N/A	9	5320-NM-03-2024-51AB94EE-1 to 9
NM RPS Active	9aa7ddf2-4ffc	W5379	EPENMAGG1S NM063S	EPENMAGG1S NM063S	Solar	3/1/2024	3/1/2024	3/31/2024	NM	N/A	9	5379-NM-03-2024-783FD727-1 to 9
NM RPS Active	9aa7ddf2-4ffc	W5469	EPENMAGG1S NM064S	EPENMAGG1S NM064S	Solar	3/1/2024	3/1/2024	3/31/2024	NM	N/A	6	5469-NM-03-2024-0544D320-1 to 6
NM RPS Active	9aa7ddf2-4ffc	W5547	EPENMAGG1S NM065S	EPENMAGG1S NM065S	Solar	3/1/2024	3/1/2024	3/31/2024	NM	N/A	5	5547-NM-03-2024-A5110A40-1 to 5
NM RPS Active	9aa7ddf2-4ffc	W5553	EPENMAGG1S NM066S	EPENMAGG1S NM066S	Solar	3/1/2024	3/1/2024	3/31/2024	NM	N/A	1	5553-NM-03-2024-6CC7794F-1 to 1
NM RPS Active	9aa7ddf2-4ffc	W5652	EPENMAGG1S NM067S	EPENMAGG1S NM067S	Solar	3/1/2024	3/1/2024	3/31/2024	NM	N/A	8	5652-NM-03-2024-15498499-1 to 8
NM RPS Active	9aa7ddf2-4ffc	W5742	EPENMAGG1S NM070S	EPENMAGG1S NM070S	Solar	3/1/2024	3/1/2024	3/31/2024	NM	N/A	7	5742-NM-03-2024-B61AF661-1 to 7
NM RPS Active	9aa7ddf2-4ffc	W5790	EPENMAGG1S NM071S	EPENMAGG1S NM071S	Solar	3/1/2024	3/1/2024	3/31/2024	NM	N/A	13	5790-NM-03-2024-DF027708-1 to 13
NM RPS Active	9aa7ddf2-4ffc	W5869	EPENMAGG1S NM073S	EPENMAGG1S NM073S	Solar	3/1/2024	3/1/2024	3/31/2024	NM	N/A	4	5869-NM-03-2024-5DD22599-1 to 4
NM RPS Active	9aa7ddf2-4ffc	W7116	EPENMAGG1S NM074S	EPENMAGG1S NM074S	Solar	3/1/2024	3/1/2024	3/31/2024	NM	N/A	5	7116-NM-03-2024-CA0A6EC7-1 to 5
NM RPS Active	9aa7ddf2-4ffc	W7117	EPENMAGG1S NM075S	EPENMAGG1S NM075S	Solar	3/1/2024	3/1/2024	3/31/2024	NM	N/A	3	7117-NM-03-2024-70C2CB1C-1 to 3
NM RPS Active	9aa7ddf2-4ffc	W7118	EPENMAGG1S NM076S	EPENMAGG1S NM076S	Solar	3/1/2024	3/1/2024	3/31/2024	NM	N/A	5	7118-NM-03-2024-28F9F114-1 to 5
NM RPS Active	9aa7ddf2-4ffc	W7119	EPENMAGG1S NM077S	EPENMAGG1S NM077S	Solar	3/1/2024	3/1/2024	3/31/2024	NM	N/A	9	7119-NM-03-2024-6FA0EE3D-1 to 9
NM RPS Active	9aa7ddf2-4ffc	W7120	EPENMAGG1S NM078S	EPENMAGG1S NM078S	Solar	3/1/2024	3/1/2024	3/31/2024	NM	N/A	7	7120-NM-03-2024-55855BD0-1 to 7
NM RPS Active	9aa7ddf2-4ffc	W7121	EPENMAGG1S NM079S	EPENMAGG1S NM079S	Solar	3/1/2024	3/1/2024	3/31/2024	NM	N/A	5	7121-NM-03-2024-21C5923A-1 to 5
NM RPS Active	9aa7ddf2-4ffc	W7324	EPENMAGG1S NM080S	EPENMAGG1S NM080S	Solar	3/1/2024	3/1/2024	3/31/2024	NM	N/A	6	7324-NM-03-2024-D7B0EFC2-1 to 6
NM RPS Active	9aa7ddf2-4ffc	W7325	EPENMAGG1S NM081S	EPENMAGG1S NM081S	Solar	3/1/2024	3/1/2024	3/31/2024	NM	N/A	8	7325-NM-03-2024-F01B6E37-1 to 8
NM RPS Active	9aa7ddf2-4ffc	W7332	EPENMAGG1S NM082S	EPENMAGG1S NM082S	Solar	3/1/2024	3/1/2024	3/31/2024	NM	N/A	9	7332-NM-03-2024-9D03880A-1 to 9

Account	Account ID	WREGIS GU ID	Unit Name	Facility Name	Fuel Type	Vintage	Generation Start Date	Generation End Date	Generator Location	Eligility	Quantity (RECs)	Serial Numbers
NM RPS Active	9aa7ddf2-4ffc	W7333	EPENMAGG1S NM083S	EPENMAGG1S NM083S	Solar	3/1/2024	3/1/2024	3/31/2024	NM	N/A	9	7333-NM-03-2024-91125476-1 to 9
NM RPS Active	9aa7ddf2-4ffc	W7424	EPENMAGG1S NM084S	EPENMAGG1S NM084S	Solar	3/1/2024	3/1/2024	3/31/2024	NM	N/A	7	7424-NM-03-2024-12BF0698-1 to 7
NM RPS Active	9aa7ddf2-4ffc	W7425	EPENMAGG1S NM085S	EPENMAGG1S NM085S	Solar	3/1/2024	3/1/2024	3/31/2024	NM	N/A	5	7425-NM-03-2024-4481BDFE-1 to 5
NM RPS Active	9aa7ddf2-4ffc	W7547	EPENMAGG1S NM086S	EPENMAGG1S NM086S	Solar	3/1/2024	3/1/2024	3/31/2024	NM	N/A	7	7547-NM-03-2024-C93C906D-1 to 7
NM RPS Active	9aa7ddf2-4ffc	W7554	EPENMAGG1S NM087S	EPENMAGG1S NM087S	Solar	3/1/2024	3/1/2024	3/31/2024	NM	N/A	8	7554-NM-03-2024-436FACFE-1 to 8
NM RPS Active	9aa7ddf2-4ffc	W7555	EPENMAGG1S NM088S	EPENMAGG1S NM088S	Solar	3/1/2024	3/1/2024	3/31/2024	NM	N/A	4	7555-NM-03-2024-307F3384-1 to 4
NM RPS Active	9aa7ddf2-4ffc	W7556	EPENMAGG1S NM089S	EPENMAGG1S NM089S	Solar	3/1/2024	3/1/2024	3/31/2024	NM	N/A	6	7556-NM-03-2024-A8D7D00D-1 to 6
NM RPS Active	9aa7ddf2-4ffc	W7557	EPENMAGG1S NM090S	EPENMAGG1S NM090S	Solar	3/1/2024	3/1/2024	3/31/2024	NM	N/A	3	7557-NM-03-2024-7387D867-1 to 3
NM RPS Active	9aa7ddf2-4ffc	W7558	EPENMAGG1S NM091S	EPENMAGG1S NM091S	Solar	3/1/2024	3/1/2024	3/31/2024	NM	N/A	10	7558-NM-03-2024-F4174A02-1 to 10
NM RPS Active	9aa7ddf2-4ffc	W7559	EPENMAGG1S NM092S	EPENMAGG1S NM092S	Solar	3/1/2024	3/1/2024	3/31/2024	NM	N/A	7	7559-NM-03-2024-28EF4CE0-1 to 7
NM RPS Active	9aa7ddf2-4ffc	W7561	EPENMAGG1S NM093S	EPENMAGG1S NM093S	Solar	3/1/2024	3/1/2024	3/31/2024	NM	N/A	7	7561-NM-03-2024-0E80E616-1 to 7
NM RPS Active	9aa7ddf2-4ffc	W7671	EPENMAGG1S NM094S	EPENMAGG1S NM094S	Solar	3/1/2024	3/1/2024	3/31/2024	NM	N/A	4	7671-NM-03-2024-98B09348-1 to 4
NM RPS Active	9aa7ddf2-4ffc	W7672	EPENMAGG1S NM095S	EPENMAGG1S NM095S	Solar	3/1/2024	3/1/2024	3/31/2024	NM	N/A	5	7672-NM-03-2024-EA2B0923-1 to 5
NM RPS Active	9aa7ddf2-4ffc	W7673	EPENMAGG1S NM096S	EPENMAGG1S NM096S	Solar	3/1/2024	3/1/2024	3/31/2024	NM	N/A	5	7673-NM-03-2024-34EDC33D-1 to 5
NM RPS Active	9aa7ddf2-4ffc	W7674	EPENMAGG1S NM097S	EPENMAGG1S NM097S	Solar	3/1/2024	3/1/2024	3/31/2024	NM	N/A	6	7674-NM-03-2024-D6CD9651-1 to 6
NM RPS Active	9aa7ddf2-4ffc	W7699	EPENMAGG1S NM098S	EPENMAGG1S NM098S	Solar	3/1/2024	3/1/2024	3/31/2024	NM	N/A	7	7699-NM-03-2024-0ABFDD8F-1 to 7
NM RPS Active	9aa7ddf2-4ffc	W7700	EPENMAGG1S NM099S	EPENMAGG1S NM099S	Solar	3/1/2024	3/1/2024	3/31/2024	NM	N/A	7	7700-NM-03-2024-E7B5B0A6-1 to 7
NM RPS Active	9aa7ddf2-4ffc	W8123	EPENMAGG1S NM100S	EPENMAGG1S NM100S	Solar	3/1/2024	3/1/2024	3/31/2024	NM	N/A	7	8123-NM-03-2024-FBFD2860-1 to 7
NM RPS Active	9aa7ddf2-4ffc	W8124	EPENMAGG1S NM101S	EPENMAGG1S NM101S	Solar	3/1/2024	3/1/2024	3/31/2024	NM	N/A	8	8124-NM-03-2024-E30361F9-1 to 8
NM RPS Active	9aa7ddf2-4ffc	W8197	EPENMAGG1S NM102S	EPENMAGG1S NM102S	Solar	3/1/2024	3/1/2024	3/31/2024	NM	N/A	4	8197-NM-03-2024-2FC22A44-1 to 4
NM RPS Active	9aa7ddf2-4ffc	W8198	EPENMAGG1S NM103S	EPENMAGG1S NM103S	Solar	3/1/2024	3/1/2024	3/31/2024	NM	N/A	5	8198-NM-03-2024-0D4041E6-1 to 5
NM RPS Active	9aa7ddf2-4ffc	W8794	EPENMAGG1S NM104S	EPENMAGG1S NM104S	Solar	3/1/2024	3/1/2024	3/31/2024	NM	N/A	10	8794-NM-03-2024-DD68044D-1 to 10
NM RPS Active	9aa7ddf2-4ffc	W8835	EPENMAGG1S NM105S	EPENMAGG1S NM105S	Solar	3/1/2024	3/1/2024	3/31/2024	NM	N/A	6	8835-NM-03-2024-5C8B66E3-1 to 6
NM RPS Active	9aa7ddf2-4ffc	W8836	EPENMAGG1S NM106S	EPENMAGG1S NM106S	Solar	3/1/2024	3/1/2024	3/31/2024	NM	N/A	8	8836-NM-03-2024-1584F74C-1 to 8
NM RPS Active	9aa7ddf2-4ffc	W9324	EPENMAGG1S NM107S	EPENMAGG1S NM107S	Solar	3/1/2024	3/1/2024	3/31/2024	NM	N/A	7	9324-NM-03-2024-5547FF4A-1 to 7
NM RPS Active	9aa7ddf2-4ffc	W9325	EPENMAGG1S NM108S	EPENMAGG1S NM108S	Solar	3/1/2024	3/1/2024	3/31/2024	NM	N/A	6	9325-NM-03-2024-60930478-1 to 6
NM RPS Active	9aa7ddf2-4ffc	W9344	EPENMAGG1S NM109S	EPENMAGG1S NM109S	Solar	3/1/2024	3/1/2024	3/31/2024	NM	N/A	6	9344-NM-03-2024-3A14748B-1 to 6
NM RPS Active	9aa7ddf2-4ffc	W9345	EPENMAGG1S NM110S	EPENMAGG1S NM110S	Solar	3/1/2024	3/1/2024	3/31/2024	NM	N/A	6	9345-NM-03-2024-A191729B-1 to 6
NM RPS Active	9aa7ddf2-4ffc	W9602	EPENMAGG1S NM111S	EPENMAGG1S NM111S	Solar	3/1/2024	3/1/2024	3/31/2024	NM	N/A	9	9602-NM-03-2024-34D2006F-1 to 9
NM RPS Active	9aa7ddf2-4ffc	W9603	EPENMAGG1S NM112S	EPENMAGG1S NM112S	Solar	3/1/2024	3/1/2024	3/31/2024	NM	N/A	6	9603-NM-03-2024-D4D55FC0-1 to 6
NM RPS Active	9aa7ddf2-4ffc	W10025	EPENMAGG1S NM113S	EPENMAGG1S NM113S	Solar	3/1/2024	3/1/2024	3/31/2024	NM	N/A	5	10025-NM-03-2024-30048152-1 to 5
NM RPS Active	9aa7ddf2-4ffc	W10026	EPENMAGG1S NM114S	EPENMAGG1S NM114S	Solar	3/1/2024	3/1/2024	3/31/2024	NM	N/A	7	10026-NM-03-2024-CE3A4D4E-1 to 7
NM RPS Active	9aa7ddf2-4ffc	W10027	EPENMAGG1S NM115S	EPENMAGG1S NM115S	Solar	3/1/2024	3/1/2024	3/31/2024	NM	N/A	8	10027-NM-03-2024-D0C4ED92-1 to 8
NM RPS Active	9aa7ddf2-4ffc	W10105	EPENMAGG1S NM116S	EPENMAGG1S NM116S	Solar	3/1/2024	3/1/2024	3/31/2024	NM	N/A	6	10105-NM-03-2024-1EDB2165-1 to 6
NM RPS Active	9aa7ddf2-4ffc	W10106	EPENMAGG1S NM117S	EPENMAGG1S NM117S	Solar	3/1/2024	3/1/2024	3/31/2024	NM	N/A	7	10106-NM-03-2024-3CC5CDB0-1 to 7
NM RPS Active	9aa7ddf2-4ffc	W10107	EPENMAGG1S NM118S	EPENMAGG1S NM118S	Solar	3/1/2024	3/1/2024	3/31/2024	NM	N/A	6	10107-NM-03-2024-259453A4-1 to 6
NM RPS Active	9aa7ddf2-4ffc	W10167	EPENMAGG1S NM119S	EPENMAGG1S NM119S	Solar	3/1/2024	3/1/2024	3/31/2024	NM	N/A	8	10167-NM-03-2024-18D34A0F-1 to 8
NM RPS Active	9aa7ddf2-4ffc	W10460	EPENMAGG1S NM121S	EPENMAGG1S NM121S	Solar	3/1/2024	3/1/2024	3/31/2024	NM	N/A	6	10460-NM-03-2024-A8D9D8A0-1 to 6
NM RPS Active	9aa7ddf2-4ffc	W10461	EPENMAGG1S NM122S	EPENMAGG1S NM122S	Solar	3/1/2024	3/1/2024	3/31/2024	NM	N/A	6	10461-NM-03-2024-FE497AA7-1 to 6
NM RPS Active	9aa7ddf2-4ffc	W10695	EPENMAGG1S NM124S	EPENMAGG1S NM124S	Solar	3/1/2024	3/1/2024	3/31/2024	NM	N/A	9	10695-NM-03-2024-B494E442-1 to 9
NM RPS Active	9aa7ddf2-4ffc	W10800	EPENMAGG1S NM125S	EPENMAGG1S NM125S	Solar	3/1/2024	3/1/2024	3/31/2024	NM	N/A	4	10800-NM-03-2024-B63F0C2F-1 to 4
NM RPS Active	9aa7ddf2-4ffc	W10820	EPENMAGG1S NM126S	EPENMAGG1S NM126S	Solar	3/1/2024	3/1/2024	3/31/2024	NM	N/A	4	10820-NM-03-2024-3DD23A91-1 to 4
NM RPS Active	9aa7ddf2-4ffc	W10821	EPENMAGG1S NM127S	EPENMAGG1S NM127S	Solar	3/1/2024	3/1/2024	3/31/2024	NM	N/A	9	10821-NM-03-2024-2C77A587-1 to 9
NM RPS Active	9aa7ddf2-4ffc	W10867	EPENMAGG1S NM128S	EPENMAGG1S NM128S	Solar	3/1/2024	3/1/2024	3/31/2024	NM	N/A	6	10867-NM-03-2024-84B5DE53-1 to 6
NM RPS Active	9aa7ddf2-4ffc	W10868	EPENMAGG1S NM129S	EPENMAGG1S NM129S	Solar	3/1/2024	3/1/2024	3/31/2024	NM	N/A	7	10868-NM-03-2024-1B10E08C-1 to 7
NM RPS Active	9aa7ddf2-4ffc	W10925	EPENMAGG1S NM131S	EPENMAGG1S NM131S	Solar	3/1/2024	3/1/2024	3/31/2024	NM	N/A	6	10925-NM-03-2024-45BAD0BE-1 to 6
NM RPS Active	9aa7ddf2-4ffc	W10926	EPENMAGG1S NM132S	EPENMAGG1S NM132S	Solar	3/1/2024	3/1/2024	3/31/2024	NM	N/A	4	10926-NM-03-2024-723211A6-1 to 4
NM RPS Active	9aa7ddf2-4ffc	W11361	EPENMAGG1S NM133S	EPENMAGG1S NM133S	Solar	3/1/2024	3/1/2024	3/31/2024	NM	N/A	7	11361-NM-03-2024-9F0241E2-1 to 7
NM RPS Active	9aa7ddf2-4ffc	W11363	EPENMAGG1S NM135S	EPENMAGG1S NM135S	Solar	3/1/2024	3/1/2024	3/31/2024	NM	N/A	9	11363-NM-03-2024-21A47CA2-1 to 9
NM RPS Active	9aa7ddf2-4ffc	W11374	EPENMAGG1S NM136S	EPENMAGG1S NM136S	Solar	3/1/2024	3/1/2024	3/31/2024	NM	N/A	8	11374-NM-03-2024-A08240B8-1 to 8
NM RPS Active	9aa7ddf2-4ffc	W11375	EPENMAGG1S NM137S	EPENMAGG1S NM137S	Solar	3/1/2024	3/1/2024	3/31/2024	NM	N/A	11	11375-NM-03-2024-13FD97EE-1 to 11
NM RPS Active	9aa7ddf2-4ffc	W11377	EPENMAGG1S NM138S	EPENMAGG1S NM138S	Solar	3/1/2024	3/1/2024	3/31/2024	NM	N/A	8	11377-NM-03-2024-3EE2D20D-1 to 8
NM RPS Active	9aa7ddf2-4ffc	W11378	EPENMAGG1S NM139S	EPENMAGG1S NM139S	Solar	3/1/2024	3/1/2024	3/31/2024	NM	N/A	12	11378-NM-03-2024-9745B2F3-1 to 12
NM RPS Active	9aa7ddf2-4ffc	W11379	EPENMAGG1S NM140S	EPENMAGG1S NM140S	Solar	3/1/2024	3/1/2024	3/31/2024	NM	N/A	10	11379-NM-03-2024-712400DF-1 to 10
NM RPS Active	9aa7ddf2-4ffc	W11381	EPENMAGG1S NM141S	EPENMAGG1S NM141S	Solar	3/1/2024	3/1/2024	3/31/2024	NM	N/A	9	11381-NM-03-2024-FF211EF0-1 to 9
NM RPS Active	9aa7ddf2-4ffc	W11382	EPENMAGG1S NM142S	EPENMAGG1S NM142S	Solar	3/1/2024	3/1/2024	3/31/2024	NM	N/A	8	11382-NM-03-2024-0A40D1EA-1 to 8
NM RPS Active	9aa7ddf2-4ffc	W11383	EPENMAGG1S NM143S	EPENMAGG1S NM143S	Solar	3/1/2024	3/1/2024	3/31/2024	NM	N/A	7	11383-NM-03-2024-89AFF57D-1 to 7
NM RPS Active	9aa7ddf2-4ffc	W11384	EPENMAGG1S NM144S	EPENMAGG1S NM144S	Solar	3/1/2024	3/1/2024	3/31/2024	NM	N/A	11	11384-NM-03-2024-8BCAF087-1 to 11

Account	Account ID	WREGIS GU ID	Unit Name	Facility Name	Fuel Type	Vintage	Generation Start Date	Generation End Date	Generator Location	Eligility	Quantity (RECs)	Serial Numbers
NM RPS Active	9aa7ddf2-4ffc	W11968	EPENMAGG1S NM145S	EPENMAGG1S NM145S	Solar	3/1/2024	3/1/2024	3/31/2024	NM	N/A	8	11968-NM-03-2024-87DE3743-1 to 8
NM RPS Active	9aa7ddf2-4ffc	W11969	EPENMAGG1S NM146S	EPENMAGG1S NM146S	Solar	3/1/2024	3/1/2024	3/31/2024	NM	N/A	8	11969-NM-03-2024-1730F395-1 to 8
NM RPS Active	9aa7ddf2-4ffc	W11970	EPENMAGG1S NM147S	EPENMAGG1S NM147S	Solar	3/1/2024	3/1/2024	3/31/2024	NM	N/A	10	11970-NM-03-2024-687B3AEA-1 to 10
NM RPS Active	9aa7ddf2-4ffc	W11972	EPENMAGG1S NM149S	EPENMAGG1S NM149S	Solar	3/1/2024	3/1/2024	3/31/2024	NM	N/A	10	11972-NM-03-2024-9CCA2CD9-1 to 10
NM RPS Active	9aa7ddf2-4ffc	W11973	EPENMAGG1S NM150S	EPENMAGG1S NM150S	Solar	3/1/2024	3/1/2024	3/31/2024	NM	N/A	8	11973-NM-03-2024-7E5EE9B7-1 to 8
NM RPS Active	9aa7ddf2-4ffc	W11974	EPENMAGG1S NM151S	EPENMAGG1S NM151S	Solar	3/1/2024	3/1/2024	3/31/2024	NM	N/A	8	11974-NM-03-2024-02DE32A6-1 to 8
NM RPS Active	9aa7ddf2-4ffc	W11975	EPENMAGG1S NM152S	EPENMAGG1S NM152S	Solar	3/1/2024	3/1/2024	3/31/2024	NM	N/A	7	11975-NM-03-2024-347984FF-1 to 7
NM RPS Active	9aa7ddf2-4ffc	W11976	EPENMAGG1S NM153S	EPENMAGG1S NM153S	Solar	3/1/2024	3/1/2024	3/31/2024	NM	N/A	10	11976-NM-03-2024-BFA454F2-1 to 10
NM RPS Active	9aa7ddf2-4ffc	W11977	EPENMAGG1S NM154S	EPENMAGG1S NM154S	Solar	3/1/2024	3/1/2024	3/31/2024	NM	N/A	5	11977-NM-03-2024-047BEAAE-1 to 5
NM RPS Active	9aa7ddf2-4ffc	W11980	EPENMAGG1S NM156S	EPENMAGG1S NM156S	Solar	3/1/2024	3/1/2024	3/31/2024	NM	N/A	11	11980-NM-03-2024-117F8A4D-1 to 11
NM RPS Active	9aa7ddf2-4ffc	W11981	EPENMAGG1S NM157S	EPENMAGG1S NM157S	Solar	3/1/2024	3/1/2024	3/31/2024	NM	N/A	9	11981-NM-03-2024-ADAC7E38-1 to 9
NM RPS Active	9aa7ddf2-4ffc	W11982	EPENMAGG1S NM158S	EPENMAGG1S NM158S	Solar	3/1/2024	3/1/2024	3/31/2024	NM	N/A	8	11982-NM-03-2024-9BEA8C48-1 to 8
NM RPS Active	9aa7ddf2-4ffc	W11984	EPENMAGG1S NM159S	EPENMAGG1S NM159S	Solar	3/1/2024	3/1/2024	3/31/2024	NM	N/A	8	11984-NM-03-2024-B93BCF45-1 to 8
NM RPS Active	9aa7ddf2-4ffc	W12098	EPENMAGG1S NM160S	EPENMAGG1S NM160S	Solar	3/1/2024	3/1/2024	3/31/2024	NM	N/A	9	12098-NM-03-2024-6A3461C8-1 to 9
NM RPS Active	9aa7ddf2-4ffc	W12099	EPENMAGG1S NM161S	EPENMAGG1S NM161S	Solar	3/1/2024	3/1/2024	3/31/2024	NM	N/A	9	12099-NM-03-2024-AA9AE29B-1 to 9
NM RPS Active	9aa7ddf2-4ffc	W12100	EPENMAGG1S NM162S	EPENMAGG1S NM162S	Solar	3/1/2024	3/1/2024	3/31/2024	NM	N/A	13	12100-NM-03-2024-8AE8926E-1 to 13
NM RPS Active	9aa7ddf2-4ffc	W12101	EPENMAGG1S NM163S	EPENMAGG1S NM163S	Solar	3/1/2024	3/1/2024	3/31/2024	NM	N/A	9	12101-NM-03-2024-99DE0FDB-1 to 9
NM RPS Active	9aa7ddf2-4ffc	W12188	EPENMAGG1S NM164S	EPENMAGG1S NM164S	Solar	3/1/2024	3/1/2024	3/31/2024	NM	N/A	8	12188-NM-03-2024-CD714298-1 to 8
NM RPS Active	9aa7ddf2-4ffc	W12257	EPENMAGG1S NM166S	EPENMAGG1S NM166S	Solar	3/1/2024	3/1/2024	3/31/2024	NM	N/A	2	12257-NM-03-2024-855415E1-1 to 2
NM RPS Active	9aa7ddf2-4ffc	W12260	EPENMAGG1S NM168S	EPENMAGG1S NM168S	Solar	3/1/2024	3/1/2024	3/31/2024	NM	N/A	8	12260-NM-03-2024-9793DBEC-1 to 8
NM RPS Active	9aa7ddf2-4ffc	W12643	EPENMAGG1S NM170S	EPENMAGG1S NM170S	Solar	3/1/2024	3/1/2024	3/31/2024	NM	N/A	11	12643-NM-03-2024-A4953387-1 to 11
NM RPS Active	9aa7ddf2-4ffc	W12646	EPENMAGG1S NM173S	EPENMAGG1S NM173S	Solar	3/1/2024	3/1/2024	3/31/2024	NM	N/A	9	12646-NM-03-2024-3574B02D-1 to 9
NM RPS Active	9aa7ddf2-4ffc	W12651	EPENMAGG1S NM176S	EPENMAGG1S NM176S	Solar	3/1/2024	3/1/2024	3/31/2024	NM	N/A	11	12651-NM-03-2024-F37249CC-1 to 11
NM RPS Active	9aa7ddf2-4ffc	W12702	EPENMAGG1S NM177S	EPENMAGG1S NM177S	Solar	3/1/2024	3/1/2024	3/31/2024	NM	N/A	12	12702-NM-03-2024-A2746C03-1 to 12
NM RPS Active	9aa7ddf2-4ffc	W12703	EPENMAGG1S NM178S	EPENMAGG1S NM178S	Solar	3/1/2024	3/1/2024	3/31/2024	NM	N/A	12	12703-NM-03-2024-6611F154-1 to 12
NM RPS Active	9aa7ddf2-4ffc	W12704	EPENMAGG1S NM179S	EPENMAGG1S NM179S	Solar	3/1/2024	3/1/2024	3/31/2024	NM	N/A	12	12704-NM-03-2024-C34D360B-1 to 12
NM RPS Active	9aa7ddf2-4ffc	W12744	EPENMAGG1S NM180S	EPENMAGG1S NM180S	Solar	3/1/2024	3/1/2024	3/31/2024	NM	N/A	9	12744-NM-03-2024-4E1D6F88-1 to 9
NM RPS Active	9aa7ddf2-4ffc	W12745	EPENMAGG1S NM181S	EPENMAGG1S NM181S	Solar	3/1/2024	3/1/2024	3/31/2024	NM	N/A	9	12745-NM-03-2024-239D0175-1 to 9
NM RPS Active	9aa7ddf2-4ffc	W13207	EPENMAGG1S NM182S	EPENMAGG1S NM182S	Solar	3/1/2024	3/1/2024	3/31/2024	NM	N/A	10	13207-NM-03-2024-B72E048B-1 to 10
NM RPS Active	9aa7ddf2-4ffc	W13208	EPENMAGG1S NM183S	EPENMAGG1S NM183S	Solar	3/1/2024	3/1/2024	3/31/2024	NM	N/A	11	13208-NM-03-2024-B0B19068-1 to 11
NM RPS Active	9aa7ddf2-4ffc	W13211	EPENMAGG1S NM185S	EPENMAGG1S NM185S	Solar	3/1/2024	3/1/2024	3/31/2024	NM	N/A	9	13211-NM-03-2024-3DD01527-1 to 9
NM RPS Active	9aa7ddf2-4ffc	W13615	EPENMAGG1S NM186S	EPENMAGG1S NM186S	Solar	3/1/2024	3/1/2024	3/31/2024	NM	N/A	9	13615-NM-03-2024-AA5DA709-1 to 9
NM RPS Active	9aa7ddf2-4ffc	W13616	EPENMAGG1S NM187S	EPENMAGG1S NM187S	Solar	3/1/2024	3/1/2024	3/31/2024	NM	N/A	7	13616-NM-03-2024-54F146D4-1 to 7
NM RPS Active	9aa7ddf2-4ffc	W13701	EPENMAGG1S NM188S	EPENMAGG1S NM188S	Solar	3/1/2024	3/1/2024	3/31/2024	NM	N/A	8	13701-NM-03-2024-D861F588-1 to 8
NM RPS Active	9aa7ddf2-4ffc	W13702	EPENMAGG1S NM189S	EPENMAGG1S NM189S	Solar	3/1/2024	3/1/2024	3/31/2024	NM	N/A	10	13702-NM-03-2024-BABBC5EB-1 to 10
NM RPS Active	9aa7ddf2-4ffc	W13799	EPENMAGG1S NM190S	EPENMAGG1S NM190S	Solar	3/1/2024	3/1/2024	3/31/2024	NM	N/A	11	13799-NM-03-2024-AC69D2AF-1 to 11
NM RPS Active	9aa7ddf2-4ffc	W13801	EPENMAGG1S NM191S	EPENMAGG1S NM191S	Solar	3/1/2024	3/1/2024	3/31/2024	NM	N/A	8	13801-NM-03-2024-4CA20734-1 to 8
NM RPS Active	9aa7ddf2-4ffc	W13802	EPENMAGG1S NM192S	EPENMAGG1S NM192S	Solar	3/1/2024	3/1/2024	3/31/2024	NM	N/A	8	13802-NM-03-2024-151436B0-1 to 8
NM RPS Active	9aa7ddf2-4ffc	W13803	EPENMAGG1S NM193S	EPENMAGG1S NM193S	Solar	3/1/2024	3/1/2024	3/31/2024	NM	N/A	8	13803-NM-03-2024-009A87A7-1 to 8
NM RPS Active	9aa7ddf2-4ffc	W13804	EPENMAGG1S NM194S	EPENMAGG1S NM194S	Solar	3/1/2024	3/1/2024	3/31/2024	NM	N/A	9	13804-NM-03-2024-3756202C-1 to 9
NM RPS Active	9aa7ddf2-4ffc	W13897	EPENMAGG1S NM195S	EPENMAGG1S NM195S	Solar	3/1/2024	3/1/2024	3/31/2024	NM	N/A	7	13897-NM-03-2024-3CEB5943-1 to 7
NM RPS Active	9aa7ddf2-4ffc	W13898	EPENMAGG1S NM196S	EPENMAGG1S NM196S	Solar	3/1/2024	3/1/2024	3/31/2024	NM	N/A	10	13898-NM-03-2024-82E7713E-1 to 10
NM RPS Active	9aa7ddf2-4ffc	W13972	EPENMAGG1S NM197S	EPENMAGG1S NM197S	Solar	3/1/2024	3/1/2024	3/31/2024	NM	N/A	9	13972-NM-03-2024-61B1F0FB-1 to 9
NM RPS Active	9aa7ddf2-4ffc	W13973	EPENMAGG1S NM198S	EPENMAGG1S NM198S	Solar	3/1/2024	3/1/2024	3/31/2024	NM	N/A	10	13973-NM-03-2024-882CC106-1 to 10
NM RPS Active	9aa7ddf2-4ffc	W13975	EPENMAGG1S NM199S	EPENMAGG1S NM199S	Solar	3/1/2024	3/1/2024	3/31/2024	NM	N/A	11	13975-NM-03-2024-B485B020-1 to 11
NM RPS Active	9aa7ddf2-4ffc	W14044	EPENMAGG1S NM200S	EPENMAGG1S NM200S	Solar	3/1/2024	3/1/2024	3/31/2024	NM	N/A	8	14044-NM-03-2024-62D29703-1 to 8
NM RPS Active	9aa7ddf2-4ffc	W14045	EPENMAGG1S NM201S	EPENMAGG1S NM201S	Solar	3/1/2024	3/1/2024	3/31/2024	NM	SMUD	7	14045-NM-03-2024-1C6C8593-1 to 7
NM RPS Active	9aa7ddf2-4ffc	W14046	EPENMAGG1S NM202S	EPENMAGG1S NM202S	Solar	3/1/2024	3/1/2024	3/31/2024	NM	N/A	9	14046-NM-03-2024-15BD2F8B-1 to 9
NM RPS Active	9aa7ddf2-4ffc	W14049	EPENMAGG1S NM204S	EPENMAGG1S NM204S	Solar	3/1/2024	3/1/2024	3/31/2024	NM	SMUD	10	14049-NM-03-2024-C340F906-1 to 10
NM RPS Active	9aa7ddf2-4ffc	W14225	N/A	EPENMAGG1S NM205S	Solar	3/1/2024	3/1/2024	3/31/2024	NM	N/A	8	14225-NM-03-2024-3CEE5136-1 to 8
NM RPS Active	9aa7ddf2-4ffc	W14230	N/A	EPENMAGG1S NM206S	Solar	3/1/2024	3/1/2024	3/31/2024	NM	N/A	9	14230-NM-03-2024-B571ED2D-1 to 9
NM RPS Active	9aa7ddf2-4ffc	W14334	N/A	EPENMAGG1S NM207S	Solar	3/1/2024	3/1/2024	3/31/2024	NM	N/A	8	14334-NM-03-2024-63DC5A38-1 to 8
NM RPS Active	9aa7ddf2-4ffc	W15470	N/A	EPENMAGG1S NM208S	Solar	3/1/2024	3/1/2024	3/31/2024	NM	N/A	11	15470-NM-03-2024-2D25A6E7-1 to 11
NM RPS Active	9aa7ddf2-4ffc	W15471	N/A	EPENMAGG1S NM209S	Solar	3/1/2024	3/1/2024	3/31/2024	NM	N/A	7	15471-NM-03-2024-F134DA28-1 to 7
NM RPS Active	9aa7ddf2-4ffc	W15472	N/A	EPENMAGG1S NM210S	Solar	3/1/2024	3/1/2024	3/31/2024	NM	N/A	8	15472-NM-03-2024-4E8734F2-1 to 8
NM RPS Active	9aa7ddf2-4ffc	W15473	N/A	EPENMAGG1S NM211S	Solar	3/1/2024	3/1/2024	3/31/2024	NM	N/A	9	15473-NM-03-2024-C5E87B72-1 to 9
NM RPS Active	9aa7ddf2-4ffc	W15474	N/A	EPENMAGG1S NM212S	Solar	3/1/2024	3/1/2024	3/31/2024	NM	N/A	9	15474-NM-03-2024-317D8768-1 to 9
NM RPS Active	9aa7ddf2-4ffc	W15475	N/A	EPENMAGG1S NM213S	Solar	3/1/2024	3/1/2024	3/31/2024	NM	N/A	12	15475-NM-03-2024-8D6443AE-1 to 12

Account	Account ID	WREGIS GU ID	Unit Name	Facility Name	Fuel Type	Vintage	Generation Start Date	Generation End Date	Generator Location	Eligility	Quantity (RECs)	Serial Numbers
NM RPS Active	9aa7ddf2-4ffc	W15517	N/A	EPENMAGG1S NM214S	Solar	3/1/2024	3/1/2024	3/31/2024	NM	N/A	10	15517-NM-03-2024-B8BA28E1-1 to 10
NM RPS Active	9aa7ddf2-4ffc	W15518	N/A	EPENMAGG1S NM215S	Solar	3/1/2024	3/1/2024	3/31/2024	NM	N/A	9	15518-NM-03-2024-CC7B4046-1 to 9
NM RPS Active	9aa7ddf2-4ffc	W15519	N/A	EPENMAGG1S NM216S	Solar	3/1/2024	3/1/2024	3/31/2024	NM	N/A	13	15519-NM-03-2024-43235B65-1 to 13
NM RPS Active	9aa7ddf2-4ffc	W15520	N/A	EPENMAGG1S NM217S	Solar	3/1/2024	3/1/2024	3/31/2024	NM	N/A	7	15520-NM-03-2024-187E87EC-1 to 7
NM RPS Active	9aa7ddf2-4ffc	W15521	N/A	EPENMAGG1S NM218S	Solar	3/1/2024	3/1/2024	3/31/2024	NM	N/A	9	15521-NM-03-2024-C33B5AF1-1 to 9
NM RPS Active	9aa7ddf2-4ffc	W15533	N/A	EPENMAGG1S NM219S	Solar	3/1/2024	3/1/2024	3/31/2024	NM	N/A	8	15533-NM-03-2024-835C3946-1 to 8
NM RPS Active	9aa7ddf2-4ffc	W15702	N/A	EPENMAGG1S NM220S	Solar	3/1/2024	3/1/2024	3/31/2024	NM	N/A	10	15702-NM-03-2024-89177842-1 to 10
NM RPS Active	9aa7ddf2-4ffc	W15703	N/A	EPENMAGG1S NM221S	Solar	3/1/2024	3/1/2024	3/31/2024	NM	N/A	11	15703-NM-03-2024-D0BDB6BE-1 to 11
NM RPS Active	9aa7ddf2-4ffc	W15704	N/A	EPENMAGG1S NM222S	Solar	3/1/2024	3/1/2024	3/31/2024	NM	N/A	8	15704-NM-03-2024-994D8CD7-1 to 8
NM RPS Active	9aa7ddf2-4ffc	W15705	N/A	EPENMAGG1S NM223S	Solar	3/1/2024	3/1/2024	3/31/2024	NM	N/A	10	15705-NM-03-2024-730D824F-1 to 10
NM RPS Active	9aa7ddf2-4ffc	W16065	N/A	EPENMAGG1S NM224S	Solar	3/1/2024	3/1/2024	3/31/2024	NM	N/A	11	16065-NM-03-2024-5B18008F-1 to 11
NM RPS Active	9aa7ddf2-4ffc	W16066	N/A	EPENMAGG1S NM225S	Solar	3/1/2024	3/1/2024	3/31/2024	NM	N/A	12	16066-NM-03-2024-E793AC93-1 to 12
NM RPS Active	9aa7ddf2-4ffc	W16067	N/A	EPENMAGG1S NM226S	Solar	3/1/2024	3/1/2024	3/31/2024	NM	N/A	8	16067-NM-03-2024-D91A7932-1 to 8
NM RPS Active	9aa7ddf2-4ffc	W16490	N/A	EPENMAGG1S NM227S	Solar	3/1/2024	3/1/2024	3/31/2024	NM	N/A	7	16490-NM-03-2024-BC8D7108-1 to 7
NM RPS Active	9aa7ddf2-4ffc	W16492	N/A	EPENMAGG1S NM229S	Solar	3/1/2024	3/1/2024	3/31/2024	NM	N/A	11	16492-NM-03-2024-C177EB25-1 to 11
NM RPS Active	9aa7ddf2-4ffc	W16493	N/A	EPENMAGG1S NM230S	Solar	3/1/2024	3/1/2024	3/31/2024	NM	N/A	10	16493-NM-03-2024-0E03B6C2-1 to 10
NM RPS Active	9aa7ddf2-4ffc	W16494	N/A	EPENMAGG1S NM231S	Solar	3/1/2024	3/1/2024	3/31/2024	NM	N/A	8	16494-NM-03-2024-CE57BFD5-1 to 8
NM RPS Active	9aa7ddf2-4ffc	W17425	N/A	EPENMAGG1S NM232S	Solar	3/1/2024	3/1/2024	3/31/2024	NM	N/A	7	17425-NM-03-2024-129A1A3F-1 to 7
NM RPS Active	9aa7ddf2-4ffc	W17426	N/A	EPENMAGG1S NM233S	Solar	3/1/2024	3/1/2024	3/31/2024	NM	N/A	10	17426-NM-03-2024-21F63E1F-1 to 10
NM RPS Active	9aa7ddf2-4ffc	W17427	N/A	EPENMAGG1S NM235S	Solar	3/1/2024	3/1/2024	3/31/2024	NM	N/A	10	17427-NM-03-2024-2A5E1D03-1 to 10
NM RPS Active	9aa7ddf2-4ffc	W17428	N/A	EPENMAGG1S NM236S	Solar	3/1/2024	3/1/2024	3/31/2024	NM	N/A	11	17428-NM-03-2024-F6507467-1 to 11
NM RPS Active	9aa7ddf2-4ffc	W17429	N/A	EPENMAGG1S NM237S	Solar	3/1/2024	3/1/2024	3/31/2024	NM	N/A	10	17429-NM-03-2024-C32D7A8D-1 to 10
NM RPS Active	9aa7ddf2-4ffc	W17430	N/A	EPENMAGG1S NM238S	Solar	3/1/2024	3/1/2024	3/31/2024	NM	N/A	10	17430-NM-03-2024-AB154DD9-1 to 10
NM RPS Active	9aa7ddf2-4ffc	W17431	N/A	EPENMAGG1S NM239S	Solar	3/1/2024	3/1/2024	3/31/2024	NM	N/A	10	17431-NM-03-2024-CD9BFBF7-1 to 10
NM RPS Active	9aa7ddf2-4ffc	W17432	N/A	EPENMAGG1S NM240S	Solar	3/1/2024	3/1/2024	3/31/2024	NM	N/A	10	17432-NM-03-2024-A49D7246-1 to 10
NM RPS Active	9aa7ddf2-4ffc	W17433	N/A	EPENMAGG1S NM241S	Solar	3/1/2024	3/1/2024	3/31/2024	NM	N/A	9	17433-NM-03-2024-758752D0-1 to 9
NM RPS Active	9aa7ddf2-4ffc	W17434	N/A	EPENMAGG1S NM242S	Solar	3/1/2024	3/1/2024	3/31/2024	NM	N/A	13	17434-NM-03-2024-712A7ACA-1 to 13
NM RPS Active	9aa7ddf2-4ffc	W17435	N/A	EPENMAGG1S NM243S	Solar	3/1/2024	3/1/2024	3/31/2024	NM	N/A	10	17435-NM-03-2024-2719CA7F-1 to 10
NM RPS Active	9aa7ddf2-4ffc	W17436	N/A	EPENMAGG1S NM244S	Solar	3/1/2024	3/1/2024	3/31/2024	NM	N/A	13	17436-NM-03-2024-CC4E47AC-1 to 13
NM RPS Active	9aa7ddf2-4ffc	W17546	N/A	EPENMAGG1S NM245S	Solar	3/1/2024	3/1/2024	3/31/2024	NM	N/A	10	17546-NM-03-2024-647AEFBB-1 to 10
NM RPS Active	9aa7ddf2-4ffc	W17824	N/A	EPENMAGG1S NM246S	Solar	3/1/2024	3/1/2024	3/31/2024	NM	N/A	10	17824-NM-03-2024-8DCD4297-1 to 10
NM RPS Active	9aa7ddf2-4ffc	W17825	N/A	EPENMAGG1S NM247S	Solar	3/1/2024	3/1/2024	3/31/2024	NM	N/A	11	17825-NM-03-2024-8A3D5A2E-1 to 11
NM RPS Active	9aa7ddf2-4ffc	W18165	N/A	EPENMAGG1S NM248S	Solar	3/1/2024	3/1/2024	3/31/2024	NM	N/A	6	18165-NM-03-2024-D40175F3-1 to 6
NM RPS Active	9aa7ddf2-4ffc	W18166	N/A	EPENMAGG1S NM249S	Solar	3/1/2024	3/1/2024	3/31/2024	NM	N/A	9	18166-NM-03-2024-FE43FE53-1 to 9
NM RPS Active	9aa7ddf2-4ffc	W18167	N/A	EPENMAGG1S NM250S	Solar	3/1/2024	3/1/2024	3/31/2024	NM	N/A	9	18167-NM-03-2024-901D8F07-1 to 9
NM RPS Active	9aa7ddf2-4ffc	W18279	N/A	EPENMAGG1S NM251S	Solar	3/1/2024	3/1/2024	3/31/2024	NM	N/A	10	18279-NM-03-2024-95A9F694-1 to 10
NM RPS Active	9aa7ddf2-4ffc	W18280	N/A	EPENMAGG1S NM252S	Solar	3/1/2024	3/1/2024	3/31/2024	NM	N/A	2	18280-NM-03-2024-00DC21DB-1 to 2
NM RPS Active	9aa7ddf2-4ffc	W3622	EPENMAGG1S NM001S	EPENMAGG1S NM001S	Solar	4/1/2024	4/1/2024	4/30/2024	NM	N/A	8	3622-NM-04-2024-C27E3C4D-1 to 8
NM RPS Active	9aa7ddf2-4ffc	W3624	EPENMAGG1S NM002S	EPENMAGG1S NM002S	Solar	4/1/2024	4/1/2024	4/30/2024	NM	N/A	8	3624-NM-04-2024-CD69DEFC-1 to 8
NM RPS Active	9aa7ddf2-4ffc	W3637	EPENMAGG1S NM003S	EPENMAGG1S NM003S	Solar	4/1/2024	4/1/2024	4/30/2024	NM	N/A	10	3637-NM-04-2024-19399475-1 to 10
NM RPS Active	9aa7ddf2-4ffc	W3638	EPENMAGG1S NM004S	EPENMAGG1S NM004S	Solar	4/1/2024	4/1/2024	4/30/2024	NM	N/A	11	3638-NM-04-2024-282FB55E-1 to 11
NM RPS Active	9aa7ddf2-4ffc	W3639	EPENMAGG1s NM005S	EPENMAGG1s NM005S	Solar	4/1/2024	4/1/2024	4/30/2024	NM	N/A	10	3639-NM-04-2024-144055F3-1 to 10
NM RPS Active	9aa7ddf2-4ffc	W3641	EPENMAGG1s NM007S	EPENMAGG1s NM007S	Solar	4/1/2024	4/1/2024	4/30/2024	NM	N/A	6	3641-NM-04-2024-390E2202-1 to 6
NM RPS Active	9aa7ddf2-4ffc	W3642	EPENMAGG1s NM008S	EPENMAGG1s NM008S	Solar	4/1/2024	4/1/2024	4/30/2024	NM	N/A	6	3642-NM-04-2024-49EE8704-1 to 6
NM RPS Active	9aa7ddf2-4ffc	W3643	EPENMAGG1s NM009S	EPENMAGG1s NM009S	Solar	4/1/2024	4/1/2024	4/30/2024	NM	N/A	7	3643-NM-04-2024-181608E9-1 to 7
NM RPS Active	9aa7ddf2-4ffc	W3644	EPENMAGG1S NM010S	EPENMAGG1S NM010S	Solar	4/1/2024	4/1/2024	4/30/2024	NM	N/A	7	3644-NM-04-2024-70E2DCA3-1 to 7
NM RPS Active	9aa7ddf2-4ffc	W3645	EPENMAGG1S NM011S	EPENMAGG1S NM011S	Solar	4/1/2024	4/1/2024	4/30/2024	NM	N/A	7	3645-NM-04-2024-7A6C23F5-1 to 7
NM RPS Active	9aa7ddf2-4ffc	W3646	EPENMAGG1S NM012S	EPENMAGG1S NM012S	Solar	4/1/2024	4/1/2024	4/30/2024	NM	N/A	9	3646-NM-04-2024-E1938E83-1 to 9
NM RPS Active	9aa7ddf2-4ffc	W3647	EPENMAGG1S NM013S	EPENMAGG1S NM013S	Solar	4/1/2024	4/1/2024	4/30/2024	NM	N/A	6	3647-NM-04-2024-A13CCA31-1 to 6
NM RPS Active	9aa7ddf2-4ffc	W3650	EPENMAGG1S NM016S	EPENMAGG1S NM016S	Solar	4/1/2024	4/1/2024	4/30/2024	NM	N/A	6	3650-NM-04-2024-C745E693-1 to 6
NM RPS Active	9aa7ddf2-4ffc	W3651	EPENMAGG1S NM017S	EPENMAGG1S NM017S	Solar	4/1/2024	4/1/2024	4/30/2024	NM	N/A	11	3651-NM-04-2024-2D147B5C-1 to 11
NM RPS Active	9aa7ddf2-4ffc	W3652	EPENMAGG1S NM018S	EPENMAGG1S NM018S	Solar	4/1/2024	4/1/2024	4/30/2024	NM	N/A	13	3652-NM-04-2024-4313F416-1 to 13
NM RPS Active	9aa7ddf2-4ffc	W3653	EPENMAGG1S NM019S	EPENMAGG1S NM019S	Solar	4/1/2024	4/1/2024	4/30/2024	NM	N/A	12	3653-NM-04-2024-14038DB7-1 to 12
NM RPS Active	9aa7ddf2-4ffc	W3654	EPENMAGG1S NM020S	EPENMAGG1S NM020S	Solar	4/1/2024	4/1/2024	4/30/2024	NM	N/A	8	3654-NM-04-2024-5167B92D-1 to 8
NM RPS Active	9aa7ddf2-4ffc	W3655	EPENMAGG1S NM021S	EPENMAGG1S NM021S	Solar	4/1/2024	4/1/2024	4/30/2024	NM	N/A	13	3655-NM-04-2024-2F3F6BD9-1 to 13
NM RPS Active	9aa7ddf2-4ffc	W3656	EPENMAGG1S NM022S	EPENMAGG1S NM022S	Solar	4/1/2024	4/1/2024	4/30/2024	NM	N/A	11	3656-NM-04-2024-86EB5134-1 to 11
NM RPS Active	9aa7ddf2-4ffc	W3657	EPENMAGG1S NM023S	EPENMAGG1S NM023S	Solar	4/1/2024	4/1/2024	4/30/2024	NM	N/A	11	3657-NM-04-2024-28B50BEF-1 to 11
NM RPS Active	9aa7ddf2-4ffc	W3658	EPENMAGG1S NM024S	EPENMAGG1S NM024S	Solar	4/1/2024	4/1/2024	4/30/2024	NM	N/A	9	3658-NM-04-2024-D52DAE95-1 to 9

Account	Account ID	WREGIS GU ID	Unit Name	Facility Name	Fuel Type	Vintage	Generation Start Date	Generation End Date	Generator Location	Eligility	Quantity (RECs)	Serial Numbers
NM RPS Active	9aa7ddf2-4ffc	W3659	EPENMAGG1S NM025S	EPENMAGG1S NM025S	Solar	4/1/2024	4/1/2024	4/30/2024	NM	N/A	10	3659-NM-04-2024-8C60051B-1 to 10
NM RPS Active	9aa7ddf2-4ffc	W3660	EPENMAGG1S NM026S	EPENMAGG1S NM026S	Solar	4/1/2024	4/1/2024	4/30/2024	NM	N/A	10	3660-NM-04-2024-18AC147B-1 to 10
NM RPS Active	9aa7ddf2-4ffc	W3838	EPENMAGG1S NM027S	EPENMAGG1S NM027S	Solar	4/1/2024	4/1/2024	4/30/2024	NM	N/A	12	3838-NM-04-2024-48B27FFF-1 to 12
NM RPS Active	9aa7ddf2-4ffc	W3839	EPENMAGG1S NM028S	EPENMAGG1S NM028S	Solar	4/1/2024	4/1/2024	4/30/2024	NM	N/A	11	3839-NM-04-2024-627188EA-1 to 11
NM RPS Active	9aa7ddf2-4ffc	W3946	EPENMAGG1S NM029S	EPENMAGG1S NM029S	Solar	4/1/2024	4/1/2024	4/30/2024	NM	N/A	9	3946-NM-04-2024-95BC6078-1 to 9
NM RPS Active	9aa7ddf2-4ffc	W3947	EPENMAGG1S NM030S	EPENMAGG1S NM030S	Solar	4/1/2024	4/1/2024	4/30/2024	NM	N/A	6	3947-NM-04-2024-5101E0AD-1 to 6
NM RPS Active	9aa7ddf2-4ffc	W3948	EPENMAGG1S NM031S	EPENMAGG1S NM031S	Solar	4/1/2024	4/1/2024	4/30/2024	NM	N/A	4	3948-NM-04-2024-169FEC07-1 to 4
NM RPS Active	9aa7ddf2-4ffc	W3949	EPENMAGG1S NM032S	EPENMAGG1S NM032S	Solar	4/1/2024	4/1/2024	4/30/2024	NM	N/A	7	3949-NM-04-2024-A3108800-1 to 7
NM RPS Active	9aa7ddf2-4ffc	W3950	EPENMAGG1S NM033S	EPENMAGG1S NM033S	Solar	4/1/2024	4/1/2024	4/30/2024	NM	N/A	4	3950-NM-04-2024-7AEEFA66-1 to 4
NM RPS Active	9aa7ddf2-4ffc	W3951	EPENMAGG1S NM034S	EPENMAGG1S NM034S	Solar	4/1/2024	4/1/2024	4/30/2024	NM	N/A	3	3951-NM-04-2024-D1BA4EC3-1 to 3
NM RPS Active	9aa7ddf2-4ffc	W3952	EPENMAGG1S NM035S	EPENMAGG1S NM035S	Solar	4/1/2024	4/1/2024	4/30/2024	NM	N/A	14	3952-NM-04-2024-ADDB999B-1 to 14
NM RPS Active	9aa7ddf2-4ffc	W4101	EPENMAGG1S NM036S	EPENMAGG1S NM036S	Solar	4/1/2024	4/1/2024	4/30/2024	NM	N/A	12	4101-NM-04-2024-4A24B066-1 to 12
NM RPS Active	9aa7ddf2-4ffc	W4121	EPENMAGG1S NM037S	EPENMAGG1S NM037S	Solar	4/1/2024	4/1/2024	4/30/2024	NM	N/A	8	4121-NM-04-2024-A9D93179-1 to 8
NM RPS Active	9aa7ddf2-4ffc	W4221	EPENMAGG1S NM038S	EPENMAGG1S NM038S	Solar	4/1/2024	4/1/2024	4/30/2024	NM	N/A	14	4221-NM-04-2024-0396C2A8-1 to 14
NM RPS Active	9aa7ddf2-4ffc	W4270	EPENMAGG1S NM039S	EPENMAGG1S NM039S	Solar	4/1/2024	4/1/2024	4/30/2024	NM	N/A	14	4270-NM-04-2024-3476376D-1 to 14
NM RPS Active	9aa7ddf2-4ffc	W4341	EPENMAGG1S NM040S	EPENMAGG1S NM040S	Solar	4/1/2024	4/1/2024	4/30/2024	NM	N/A	3	4341-NM-04-2024-E4B738D9-1 to 3
NM RPS Active	9aa7ddf2-4ffc	W4412	EPENMAGG1S NM041S	EPENMAGG1S NM041S	Solar	4/1/2024	4/1/2024	4/30/2024	NM	N/A	8	4412-NM-04-2024-9E45C146-1 to 8
NM RPS Active	9aa7ddf2-4ffc	W4437	EPENMAGG1S NM042S	EPENMAGG1S NM042S	Solar	4/1/2024	4/1/2024	4/30/2024	NM	N/A	13	4437-NM-04-2024-27DF41B7-1 to 13
NM RPS Active	9aa7ddf2-4ffc	W4459	EPENMAGG1S NM043S	EPENMAGG1S NM043S	Solar	4/1/2024	4/1/2024	4/30/2024	NM	N/A	11	4459-NM-04-2024-12858263-1 to 11
NM RPS Active	9aa7ddf2-4ffc	W4507	EPENMAGG1S NM044S	EPENMAGG1S NM044S	Solar	4/1/2024	4/1/2024	4/30/2024	NM	N/A	14	4507-NM-04-2024-7E2EAC52-1 to 14
NM RPS Active	9aa7ddf2-4ffc	W4649	EPENMAGG1S NM045S	EPENMAGG1S NM045S	Solar	4/1/2024	4/1/2024	4/30/2024	NM	N/A	9	4649-NM-04-2024-394EF8F0-1 to 9
NM RPS Active	9aa7ddf2-4ffc	W4704	EPENMAGG1S NM046S	EPENMAGG1S NM046S	Solar	4/1/2024	4/1/2024	4/30/2024	NM	N/A	10	4704-NM-04-2024-F52795B6-1 to 10
NM RPS Active	9aa7ddf2-4ffc	W4732	EPENMAGG1S NM047S	EPENMAGG1S NM047S	Solar	4/1/2024	4/1/2024	4/30/2024	NM	N/A	10	4732-NM-04-2024-8F57B5B0-1 to 10
NM RPS Active	9aa7ddf2-4ffc	W4806	EPENMAGG1S NM048S	EPENMAGG1S NM048S	Solar	4/1/2024	4/1/2024	4/30/2024	NM	N/A	9	4806-NM-04-2024-4F2600CE-1 to 9
NM RPS Active	9aa7ddf2-4ffc	W4833	EPENMAGG1S NM049S	EPENMAGG1S NM049S	Solar	4/1/2024	4/1/2024	4/30/2024	NM	N/A	7	4833-NM-04-2024-27217B47-1 to 7
NM RPS Active	9aa7ddf2-4ffc	W4842	EPENMAGG1S NM050S	EPENMAGG1S NM050S	Solar	4/1/2024	4/1/2024	4/30/2024	NM	N/A	4	4842-NM-04-2024-11FE7F51-1 to 4
NM RPS Active	9aa7ddf2-4ffc	W4843	EPENMAGG1S NM051S	EPENMAGG1S NM051S	Solar	4/1/2024	4/1/2024	4/30/2024	NM	N/A	9	4843-NM-04-2024-EB31AEB5-1 to 9
NM RPS Active	9aa7ddf2-4ffc	W4961	EPENMAGG1S NM052S	EPENMAGG1S NM052S	Solar	4/1/2024	4/1/2024	4/30/2024	NM	N/A	11	4961-NM-04-2024-4EF9B37D-1 to 11
NM RPS Active	9aa7ddf2-4ffc	W5022	EPENMAGG1S NM053S	EPENMAGG1S NM053S	Solar	4/1/2024	4/1/2024	4/30/2024	NM	N/A	10	5022-NM-04-2024-F133C42D-1 to 10
NM RPS Active	9aa7ddf2-4ffc	W5071	EPENMAGG1S NM054S	EPENMAGG1S NM054S	Solar	4/1/2024	4/1/2024	4/30/2024	NM	N/A	9	5071-NM-04-2024-0489A33B-1 to 9
NM RPS Active	9aa7ddf2-4ffc	W5080	EPENMAGG1S NM056S	EPENMAGG1S NM056S	Solar	4/1/2024	4/1/2024	4/30/2024	NM	N/A	14	5080-NM-04-2024-EF25D209-1 to 14
NM RPS Active	9aa7ddf2-4ffc	W5111	EPENMAGG1S NM057S	EPENMAGG1S NM057S	Solar	4/1/2024	4/1/2024	4/30/2024	NM	N/A	18	5111-NM-04-2024-EE6C3342-1 to 18
NM RPS Active	9aa7ddf2-4ffc	W5112	EPENMAGG1S NM058S	EPENMAGG1S NM058S	Solar	4/1/2024	4/1/2024	4/30/2024	NM	N/A	11	5112-NM-04-2024-CD6EE5F0-1 to 11
NM RPS Active	9aa7ddf2-4ffc	W5280	EPENMAGG1S NM059S	EPENMAGG1S NM059S	Solar	4/1/2024	4/1/2024	4/30/2024	NM	N/A	3	5280-NM-04-2024-6E7EC5DE-1 to 3
NM RPS Active	9aa7ddf2-4ffc	W5318	EPENMAGG1S NM060S	EPENMAGG1S NM060S	Solar	4/1/2024	4/1/2024	4/30/2024	NM	SMUD	15	5318-NM-04-2024-87D4D8B6-1 to 15
NM RPS Active	9aa7ddf2-4ffc	W5320	EPENMAGG1S NM062S	EPENMAGG1S NM062S	Solar	4/1/2024	4/1/2024	4/30/2024	NM	N/A	13	5320-NM-04-2024-66667B79-1 to 13
NM RPS Active	9aa7ddf2-4ffc	W5379	EPENMAGG1S NM063S	EPENMAGG1S NM063S	Solar	4/1/2024	4/1/2024	4/30/2024	NM	N/A	14	5379-NM-04-2024-E68833F0-1 to 14
NM RPS Active	9aa7ddf2-4ffc	W5469	EPENMAGG1S NM064S	EPENMAGG1S NM064S	Solar	4/1/2024	4/1/2024	4/30/2024	NM	N/A	13	5469-NM-04-2024-06B9CD0F-1 to 13
NM RPS Active	9aa7ddf2-4ffc	W5547	EPENMAGG1S NM065S	EPENMAGG1S NM065S	Solar	4/1/2024	4/1/2024	4/30/2024	NM	N/A	6	5547-NM-04-2024-016257B0-1 to 6
NM RPS Active	9aa7ddf2-4ffc	W5553	EPENMAGG1S NM066S	EPENMAGG1S NM066S	Solar	4/1/2024	4/1/2024	4/30/2024	NM	N/A	1	5553-NM-04-2024-E091A38A-1 to 1
NM RPS Active	9aa7ddf2-4ffc	W5652	EPENMAGG1S NM067S	EPENMAGG1S NM067S	Solar	4/1/2024	4/1/2024	4/30/2024	NM	N/A	13	5652-NM-04-2024-73E7A834-1 to 13
NM RPS Active	9aa7ddf2-4ffc	W5742	EPENMAGG1S NM070S	EPENMAGG1S NM070S	Solar	4/1/2024	4/1/2024	4/30/2024	NM	N/A	12	5742-NM-04-2024-BCA4167A-1 to 12
NM RPS Active	9aa7ddf2-4ffc	W5790	EPENMAGG1S NM071S	EPENMAGG1S NM071S	Solar	4/1/2024	4/1/2024	4/30/2024	NM	N/A	8	5790-NM-04-2024-F290FE04-1 to 8
NM RPS Active	9aa7ddf2-4ffc	W5869	EPENMAGG1S NM073S	EPENMAGG1S NM073S	Solar	4/1/2024	4/1/2024	4/30/2024	NM	N/A	6	5869-NM-04-2024-CAA96126-1 to 6
NM RPS Active	9aa7ddf2-4ffc	W7116	EPENMAGG1S NM074S	EPENMAGG1S NM074S	Solar	4/1/2024	4/1/2024	4/30/2024	NM	N/A	7	7116-NM-04-2024-DA02C060-1 to 7
NM RPS Active	9aa7ddf2-4ffc	W7117	EPENMAGG1S NM075S	EPENMAGG1S NM075S	Solar	4/1/2024	4/1/2024	4/30/2024	NM	N/A	7	7117-NM-04-2024-FF4BF933-1 to 7
NM RPS Active	9aa7ddf2-4ffc	W7118	EPENMAGG1S NM076S	EPENMAGG1S NM076S	Solar	4/1/2024	4/1/2024	4/30/2024	NM	N/A	7	7118-NM-04-2024-5DE0EB0A-1 to 7
NM RPS Active	9aa7ddf2-4ffc	W7119	EPENMAGG1S NM077S	EPENMAGG1S NM077S	Solar	4/1/2024	4/1/2024	4/30/2024	NM	N/A	11	7119-NM-04-2024-B9FCDEA5-1 to 11
NM RPS Active	9aa7ddf2-4ffc	W7120	EPENMAGG1S NM078S	EPENMAGG1S NM078S	Solar	4/1/2024	4/1/2024	4/30/2024	NM	N/A	10	7120-NM-04-2024-812CACF9-1 to 10
NM RPS Active	9aa7ddf2-4ffc	W7121	EPENMAGG1S NM079S	EPENMAGG1S NM079S	Solar	4/1/2024	4/1/2024	4/30/2024	NM	N/A	5	7121-NM-04-2024-90241462-1 to 5
NM RPS Active	9aa7ddf2-4ffc	W7324	EPENMAGG1S NM080S	EPENMAGG1S NM080S	Solar	4/1/2024	4/1/2024	4/30/2024	NM	N/A	8	7324-NM-04-2024-5C764A58-1 to 8
NM RPS Active	9aa7ddf2-4ffc	W7325	EPENMAGG1S NM081S	EPENMAGG1S NM081S	Solar	4/1/2024	4/1/2024	4/30/2024	NM	N/A	11	7325-NM-04-2024-6C55C68B-1 to 11
NM RPS Active	9aa7ddf2-4ffc	W7332	EPENMAGG1S NM082S	EPENMAGG1S NM082S	Solar	4/1/2024	4/1/2024	4/30/2024	NM	N/A	11	7332-NM-04-2024-1B1A724E-1 to 11
NM RPS Active	9aa7ddf2-4ffc	W7333	EPENMAGG1S NM083S	EPENMAGG1S NM083S	Solar	4/1/2024	4/1/2024	4/30/2024	NM	N/A	11	7333-NM-04-2024-9419E542-1 to 11
NM RPS Active	9aa7ddf2-4ffc	W7424	EPENMAGG1S NM084S	EPENMAGG1S NM084S	Solar	4/1/2024	4/1/2024	4/30/2024	NM	N/A	10	7424-NM-04-2024-5C6CB4D8-1 to 10
NM RPS Active	9aa7ddf2-4ffc	W7425	EPENMAGG1S NM085S	EPENMAGG1S NM085S	Solar	4/1/2024	4/1/2024	4/30/2024	NM	N/A	10	7425-NM-04-2024-46375E0B-1 to 10
NM RPS Active	9aa7ddf2-4ffc	W7547	EPENMAGG1S NM086S	EPENMAGG1S NM086S	Solar	4/1/2024	4/1/2024	4/30/2024	NM	N/A	11	7547-NM-04-2024-58B1D43E-1 to 11
NM RPS Active	9aa7ddf2-4ffc	W7554	EPENMAGG1S NM087S	EPENMAGG1S NM087S	Solar	4/1/2024	4/1/2024	4/30/2024	NM	N/A	11	7554-NM-04-2024-21E4C9FB-1 to 11

Account	Account ID	WREGIS GU ID	Unit Name	Facility Name	Fuel Type	Vintage	Generation Start Date	Generation End Date	Generator Location	Eligility	Quantity (RECs)	Serial Numbers
NM RPS Active	9aa7ddf2-4ffc	W7555	EPENMAGG1S NM088S	EPENMAGG1S NM088S	Solar	4/1/2024	4/1/2024	4/30/2024	NM	N/A	7	7555-NM-04-2024-CB4E96AE-1 to 7
NM RPS Active	9aa7ddf2-4ffc	W7556	EPENMAGG1S NM089S	EPENMAGG1S NM089S	Solar	4/1/2024	4/1/2024	4/30/2024	NM	N/A	9	7556-NM-04-2024-E397D020-1 to 9
NM RPS Active	9aa7ddf2-4ffc	W7557	EPENMAGG1S NM090S	EPENMAGG1S NM090S	Solar	4/1/2024	4/1/2024	4/30/2024	NM	N/A	8	7557-NM-04-2024-435663FE-1 to 8
NM RPS Active	9aa7ddf2-4ffc	W7558	EPENMAGG1S NM091S	EPENMAGG1S NM091S	Solar	4/1/2024	4/1/2024	4/30/2024	NM	N/A	11	7558-NM-04-2024-C26DA505-1 to 11
NM RPS Active	9aa7ddf2-4ffc	W7559	EPENMAGG1S NM092S	EPENMAGG1S NM092S	Solar	4/1/2024	4/1/2024	4/30/2024	NM	N/A	12	7559-NM-04-2024-DC1BCB26-1 to 12
NM RPS Active	9aa7ddf2-4ffc	W7561	EPENMAGG1S NM093S	EPENMAGG1S NM093S	Solar	4/1/2024	4/1/2024	4/30/2024	NM	N/A	10	7561-NM-04-2024-B58C4750-1 to 10
NM RPS Active	9aa7ddf2-4ffc	W7671	EPENMAGG1S NM094S	EPENMAGG1S NM094S	Solar	4/1/2024	4/1/2024	4/30/2024	NM	N/A	6	7671-NM-04-2024-862D199C-1 to 6
NM RPS Active	9aa7ddf2-4ffc	W7672	EPENMAGG1S NM095S	EPENMAGG1S NM095S	Solar	4/1/2024	4/1/2024	4/30/2024	NM	N/A	12	7672-NM-04-2024-6A59CC59-1 to 12
NM RPS Active	9aa7ddf2-4ffc	W7673	EPENMAGG1S NM096S	EPENMAGG1S NM096S	Solar	4/1/2024	4/1/2024	4/30/2024	NM	N/A	9	7673-NM-04-2024-7BB6CBC3-1 to 9
NM RPS Active	9aa7ddf2-4ffc	W7674	EPENMAGG1S NM097S	EPENMAGG1S NM097S	Solar	4/1/2024	4/1/2024	4/30/2024	NM	N/A	9	7674-NM-04-2024-CF88731E-1 to 9
NM RPS Active	9aa7ddf2-4ffc	W7699	EPENMAGG1S NM098S	EPENMAGG1S NM098S	Solar	4/1/2024	4/1/2024	4/30/2024	NM	N/A	9	7699-NM-04-2024-62AAEC79-1 to 9
NM RPS Active	9aa7ddf2-4ffc	W7700	EPENMAGG1S NM099S	EPENMAGG1S NM099S	Solar	4/1/2024	4/1/2024	4/30/2024	NM	N/A	8	7700-NM-04-2024-C67862CF-1 to 8
NM RPS Active	9aa7ddf2-4ffc	W8123	EPENMAGG1S NM100S	EPENMAGG1S NM100S	Solar	4/1/2024	4/1/2024	4/30/2024	NM	N/A	9	8123-NM-04-2024-76A296A9-1 to 9
NM RPS Active	9aa7ddf2-4ffc	W8124	EPENMAGG1S NM101S	EPENMAGG1S NM101S	Solar	4/1/2024	4/1/2024	4/30/2024	NM	N/A	14	8124-NM-04-2024-FE25F47F-1 to 14
NM RPS Active	9aa7ddf2-4ffc	W8197	EPENMAGG1S NM102S	EPENMAGG1S NM102S	Solar	4/1/2024	4/1/2024	4/30/2024	NM	N/A	12	8197-NM-04-2024-670E20ED-1 to 12
NM RPS Active	9aa7ddf2-4ffc	W8198	EPENMAGG1S NM103S	EPENMAGG1S NM103S	Solar	4/1/2024	4/1/2024	4/30/2024	NM	N/A	10	8198-NM-04-2024-3FF19192-1 to 10
NM RPS Active	9aa7ddf2-4ffc	W8794	EPENMAGG1S NM104S	EPENMAGG1S NM104S	Solar	4/1/2024	4/1/2024	4/30/2024	NM	N/A	16	8794-NM-04-2024-0DFD8199-1 to 16
NM RPS Active	9aa7ddf2-4ffc	W8835	EPENMAGG1S NM105S	EPENMAGG1S NM105S	Solar	4/1/2024	4/1/2024	4/30/2024	NM	N/A	9	8835-NM-04-2024-B32B07FB-1 to 9
NM RPS Active	9aa7ddf2-4ffc	W8836	EPENMAGG1S NM106S	EPENMAGG1S NM106S	Solar	4/1/2024	4/1/2024	4/30/2024	NM	N/A	12	8836-NM-04-2024-A9E58547-1 to 12
NM RPS Active	9aa7ddf2-4ffc	W9324	EPENMAGG1S NM107S	EPENMAGG1S NM107S	Solar	4/1/2024	4/1/2024	4/30/2024	NM	N/A	14	9324-NM-04-2024-5C2070BB-1 to 14
NM RPS Active	9aa7ddf2-4ffc	W9325	EPENMAGG1S NM108S	EPENMAGG1S NM108S	Solar	4/1/2024	4/1/2024	4/30/2024	NM	N/A	10	9325-NM-04-2024-CD017CB6-1 to 10
NM RPS Active	9aa7ddf2-4ffc	W9344	EPENMAGG1S NM109S	EPENMAGG1S NM109S	Solar	4/1/2024	4/1/2024	4/30/2024	NM	N/A	9	9344-NM-04-2024-77D454FE-1 to 9
NM RPS Active	9aa7ddf2-4ffc	W9345	EPENMAGG1S NM110S	EPENMAGG1S NM110S	Solar	4/1/2024	4/1/2024	4/30/2024	NM	N/A	10	9345-NM-04-2024-DABA81F7-1 to 10
NM RPS Active	9aa7ddf2-4ffc	W9602	EPENMAGG1S NM111S	EPENMAGG1S NM111S	Solar	4/1/2024	4/1/2024	4/30/2024	NM	N/A	12	9602-NM-04-2024-F7AB6450-1 to 12
NM RPS Active	9aa7ddf2-4ffc	W9603	EPENMAGG1S NM112S	EPENMAGG1S NM112S	Solar	4/1/2024	4/1/2024	4/30/2024	NM	N/A	12	9603-NM-04-2024-43306463-1 to 12
NM RPS Active	9aa7ddf2-4ffc	W10025	EPENMAGG1S NM113S	EPENMAGG1S NM113S	Solar	4/1/2024	4/1/2024	4/30/2024	NM	N/A	10	10025-NM-04-2024-1B01F95A-1 to 10
NM RPS Active	9aa7ddf2-4ffc	W10026	EPENMAGG1S NM114S	EPENMAGG1S NM114S	Solar	4/1/2024	4/1/2024	4/30/2024	NM	N/A	9	10026-NM-04-2024-983F840C-1 to 9
NM RPS Active	9aa7ddf2-4ffc	W10027	EPENMAGG1S NM115S	EPENMAGG1S NM115S	Solar	4/1/2024	4/1/2024	4/30/2024	NM	N/A	11	10027-NM-04-2024-5D8A5C95-1 to 11
NM RPS Active	9aa7ddf2-4ffc	W10105	EPENMAGG1S NM116S	EPENMAGG1S NM116S	Solar	4/1/2024	4/1/2024	4/30/2024	NM	N/A	10	10105-NM-04-2024-E946EE2A-1 to 10
NM RPS Active	9aa7ddf2-4ffc	W10106	EPENMAGG1S NM117S	EPENMAGG1S NM117S	Solar	4/1/2024	4/1/2024	4/30/2024	NM	N/A	11	10106-NM-04-2024-B9406E6C-1 to 11
NM RPS Active	9aa7ddf2-4ffc	W10107	EPENMAGG1S NM118S	EPENMAGG1S NM118S	Solar	4/1/2024	4/1/2024	4/30/2024	NM	N/A	9	10107-NM-04-2024-11710072-1 to 9
NM RPS Active	9aa7ddf2-4ffc	W10167	EPENMAGG1S NM119S	EPENMAGG1S NM119S	Solar	4/1/2024	4/1/2024	4/30/2024	NM	N/A	11	10167-NM-04-2024-3F7AE968-1 to 11
NM RPS Active	9aa7ddf2-4ffc	W10460	EPENMAGG1S NM121S	EPENMAGG1S NM121S	Solar	4/1/2024	4/1/2024	4/30/2024	NM	N/A	12	10460-NM-04-2024-6219F290-1 to 12
NM RPS Active	9aa7ddf2-4ffc	W10461	EPENMAGG1S NM122S	EPENMAGG1S NM122S	Solar	4/1/2024	4/1/2024	4/30/2024	NM	N/A	10	10461-NM-04-2024-BF767035-1 to 10
NM RPS Active	9aa7ddf2-4ffc	W10695	EPENMAGG1S NM124S	EPENMAGG1S NM124S	Solar	4/1/2024	4/1/2024	4/30/2024	NM	N/A	13	10695-NM-04-2024-04CBCF46-1 to 13
NM RPS Active	9aa7ddf2-4ffc	W10800	EPENMAGG1S NM125S	EPENMAGG1S NM125S	Solar	4/1/2024	4/1/2024	4/30/2024	NM	N/A	6	10800-NM-04-2024-E4BC3066-1 to 6
NM RPS Active	9aa7ddf2-4ffc	W10820	EPENMAGG1S NM126S	EPENMAGG1S NM126S	Solar	4/1/2024	4/1/2024	4/30/2024	NM	N/A	8	10820-NM-04-2024-8B95DB7C-1 to 8
NM RPS Active	9aa7ddf2-4ffc	W10821	EPENMAGG1S NM127S	EPENMAGG1S NM127S	Solar	4/1/2024	4/1/2024	4/30/2024	NM	N/A	11	10821-NM-04-2024-12AE3847-1 to 11
NM RPS Active	9aa7ddf2-4ffc	W10867	EPENMAGG1S NM128S	EPENMAGG1S NM128S	Solar	4/1/2024	4/1/2024	4/30/2024	NM	N/A	10	10867-NM-04-2024-AB237717-1 to 10
NM RPS Active	9aa7ddf2-4ffc	W10868	EPENMAGG1S NM129S	EPENMAGG1S NM129S	Solar	4/1/2024	4/1/2024	4/30/2024	NM	N/A	9	10868-NM-04-2024-E7138173-1 to 9
NM RPS Active	9aa7ddf2-4ffc	W10925	EPENMAGG1S NM131S	EPENMAGG1S NM131S	Solar	4/1/2024	4/1/2024	4/30/2024	NM	N/A	14	10925-NM-04-2024-3ED80C71-1 to 14
NM RPS Active	9aa7ddf2-4ffc	W10926	EPENMAGG1S NM132S	EPENMAGG1S NM132S	Solar	4/1/2024	4/1/2024	4/30/2024	NM	N/A	7	10926-NM-04-2024-7527DA20-1 to 7
NM RPS Active	9aa7ddf2-4ffc	W11361	EPENMAGG1S NM133S	EPENMAGG1S NM133S	Solar	4/1/2024	4/1/2024	4/30/2024	NM	N/A	7	11361-NM-04-2024-262BA75D-1 to 7
NM RPS Active	9aa7ddf2-4ffc	W11363	EPENMAGG1S NM135S	EPENMAGG1S NM135S	Solar	4/1/2024	4/1/2024	4/30/2024	NM	N/A	13	11363-NM-04-2024-CAE60241-1 to 13
NM RPS Active	9aa7ddf2-4ffc	W11374	EPENMAGG1S NM136S	EPENMAGG1S NM136S	Solar	4/1/2024	4/1/2024	4/30/2024	NM	N/A	9	11374-NM-04-2024-688FDC20-1 to 9
NM RPS Active	9aa7ddf2-4ffc	W11375	EPENMAGG1S NM137S	EPENMAGG1S NM137S	Solar	4/1/2024	4/1/2024	4/30/2024	NM	N/A	15	11375-NM-04-2024-A1EEE7A5-1 to 15
NM RPS Active	9aa7ddf2-4ffc	W11377	EPENMAGG1S NM138S	EPENMAGG1S NM138S	Solar	4/1/2024	4/1/2024	4/30/2024	NM	N/A	14	11377-NM-04-2024-DC0B1522-1 to 14
NM RPS Active	9aa7ddf2-4ffc	W11378	EPENMAGG1S NM139S	EPENMAGG1S NM139S	Solar	4/1/2024	4/1/2024	4/30/2024	NM	N/A	14	11378-NM-04-2024-EF106AD9-1 to 14
NM RPS Active	9aa7ddf2-4ffc	W11379	EPENMAGG1S NM140S	EPENMAGG1S NM140S	Solar	4/1/2024	4/1/2024	4/30/2024	NM	N/A	14	11379-NM-04-2024-A05E6B2C-1 to 14
NM RPS Active	9aa7ddf2-4ffc	W11381	EPENMAGG1S NM141S	EPENMAGG1S NM141S	Solar	4/1/2024	4/1/2024	4/30/2024	NM	N/A	14	11381-NM-04-2024-8BEF4520-1 to 14
NM RPS Active	9aa7ddf2-4ffc	W11382	EPENMAGG1S NM142S	EPENMAGG1S NM142S	Solar	4/1/2024	4/1/2024	4/30/2024	NM	N/A	13	11382-NM-04-2024-A041BEB9-1 to 13
NM RPS Active	9aa7ddf2-4ffc	W11383	EPENMAGG1S NM143S	EPENMAGG1S NM143S	Solar	4/1/2024	4/1/2024	4/30/2024	NM	N/A	12	11383-NM-04-2024-427B57C6-1 to 12
NM RPS Active	9aa7ddf2-4ffc	W11384	EPENMAGG1S NM144S	EPENMAGG1S NM144S	Solar	4/1/2024	4/1/2024	4/30/2024	NM	N/A	16	11384-NM-04-2024-D1B3E4CC-1 to 16
NM RPS Active	9aa7ddf2-4ffc	W11968	EPENMAGG1S NM145S	EPENMAGG1S NM145S	Solar	4/1/2024	4/1/2024	4/30/2024	NM	N/A	11	11968-NM-04-2024-6B723C22-1 to 11
NM RPS Active	9aa7ddf2-4ffc	W11969	EPENMAGG1S NM146S	EPENMAGG1S NM146S	Solar	4/1/2024	4/1/2024	4/30/2024	NM	N/A	14	11969-NM-04-2024-9FC273C3-1 to 14
NM RPS Active	9aa7ddf2-4ffc	W11970	EPENMAGG1S NM147S	EPENMAGG1S NM147S	Solar	4/1/2024	4/1/2024	4/30/2024	NM	N/A	16	11970-NM-04-2024-6E476137-1 to 16
NM RPS Active	9aa7ddf2-4ffc	W11972	EPENMAGG1S NM149S	EPENMAGG1S NM149S	Solar	4/1/2024	4/1/2024	4/30/2024	NM	N/A	14	11972-NM-04-2024-BAD87FF5-1 to 14
NM RPS Active	9aa7ddf2-4ffc	W11973	EPENMAGG1S NM150S	EPENMAGG1S NM150S	Solar	4/1/2024	4/1/2024	4/30/2024	NM	N/A	17	11973-NM-04-2024-7A00F765-1 to 17

Account	Account ID	WREGIS GU ID	Unit Name	Facility Name	Fuel Type	Vintage	Generation Start Date	Generation End Date	Generator Location	Eligility	Quantity (RECs)	Serial Numbers
NM RPS Active	9aa7ddf2-4ffc	W11974	EPENMAGG1S NM151S	EPENMAGG1S NM151S	Solar	4/1/2024	4/1/2024	4/30/2024	NM	N/A	11	11974-NM-04-2024-022C0DEB-1 to 11
NM RPS Active	9aa7ddf2-4ffc	W11975	EPENMAGG1S NM152S	EPENMAGG1S NM152S	Solar	4/1/2024	4/1/2024	4/30/2024	NM	N/A	12	11975-NM-04-2024-38EB4A65-1 to 12
NM RPS Active	9aa7ddf2-4ffc	W11976	EPENMAGG1S NM153S	EPENMAGG1S NM153S	Solar	4/1/2024	4/1/2024	4/30/2024	NM	N/A	16	11976-NM-04-2024-EC813BBD-1 to 16
NM RPS Active	9aa7ddf2-4ffc	W11977	EPENMAGG1S NM154S	EPENMAGG1S NM154S	Solar	4/1/2024	4/1/2024	4/30/2024	NM	N/A	8	11977-NM-04-2024-7FE8173D-1 to 8
NM RPS Active	9aa7ddf2-4ffc	W11980	EPENMAGG1S NM156S	EPENMAGG1S NM156S	Solar	4/1/2024	4/1/2024	4/30/2024	NM	N/A	16	11980-NM-04-2024-F1C3A08C-1 to 16
NM RPS Active	9aa7ddf2-4ffc	W11981	EPENMAGG1S NM157S	EPENMAGG1S NM157S	Solar	4/1/2024	4/1/2024	4/30/2024	NM	N/A	10	11981-NM-04-2024-DBEC5DFA-1 to 10
NM RPS Active	9aa7ddf2-4ffc	W11982	EPENMAGG1S NM158S	EPENMAGG1S NM158S	Solar	4/1/2024	4/1/2024	4/30/2024	NM	N/A	10	11982-NM-04-2024-CE6C0BEA-1 to 10
NM RPS Active	9aa7ddf2-4ffc	W11984	EPENMAGG1S NM159S	EPENMAGG1S NM159S	Solar	4/1/2024	4/1/2024	4/30/2024	NM	N/A	14	11984-NM-04-2024-F32F272D-1 to 14
NM RPS Active	9aa7ddf2-4ffc	W12098	EPENMAGG1S NM160S	EPENMAGG1S NM160S	Solar	4/1/2024	4/1/2024	4/30/2024	NM	N/A	13	12098-NM-04-2024-30C7342B-1 to 13
NM RPS Active	9aa7ddf2-4ffc	W12099	EPENMAGG1S NM161S	EPENMAGG1S NM161S	Solar	4/1/2024	4/1/2024	4/30/2024	NM	N/A	14	12099-NM-04-2024-520F9276-1 to 14
NM RPS Active	9aa7ddf2-4ffc	W12100	EPENMAGG1S NM162S	EPENMAGG1S NM162S	Solar	4/1/2024	4/1/2024	4/30/2024	NM	N/A	17	12100-NM-04-2024-60FF9BBC-1 to 17
NM RPS Active	9aa7ddf2-4ffc	W12101	EPENMAGG1S NM163S	EPENMAGG1S NM163S	Solar	4/1/2024	4/1/2024	4/30/2024	NM	N/A	12	12101-NM-04-2024-9491366E-1 to 12
NM RPS Active	9aa7ddf2-4ffc	W12188	EPENMAGG1S NM164S	EPENMAGG1S NM164S	Solar	4/1/2024	4/1/2024	4/30/2024	NM	N/A	13	12188-NM-04-2024-0F3246F9-1 to 13
NM RPS Active	9aa7ddf2-4ffc	W12257	EPENMAGG1S NM166S	EPENMAGG1S NM166S	Solar	4/1/2024	4/1/2024	4/30/2024	NM	N/A	3	12257-NM-04-2024-A4E1FE0B-1 to 3
NM RPS Active	9aa7ddf2-4ffc	W12260	EPENMAGG1S NM168S	EPENMAGG1S NM168S	Solar	4/1/2024	4/1/2024	4/30/2024	NM	N/A	16	12260-NM-04-2024-14D9C068-1 to 16
NM RPS Active	9aa7ddf2-4ffc	W12643	EPENMAGG1S NM170S	EPENMAGG1S NM170S	Solar	4/1/2024	4/1/2024	4/30/2024	NM	N/A	11	12643-NM-04-2024-8F6AC8DC-1 to 11
NM RPS Active	9aa7ddf2-4ffc	W12646	EPENMAGG1S NM173S	EPENMAGG1S NM173S	Solar	4/1/2024	4/1/2024	4/30/2024	NM	N/A	15	12646-NM-04-2024-BD38D232-1 to 15
NM RPS Active	9aa7ddf2-4ffc	W12651	EPENMAGG1S NM176S	EPENMAGG1S NM176S	Solar	4/1/2024	4/1/2024	4/30/2024	NM	N/A	17	12651-NM-04-2024-6DD19EC2-1 to 17
NM RPS Active	9aa7ddf2-4ffc	W12702	EPENMAGG1S NM177S	EPENMAGG1S NM177S	Solar	4/1/2024	4/1/2024	4/30/2024	NM	N/A	10	12702-NM-04-2024-84FF633D-1 to 10
NM RPS Active	9aa7ddf2-4ffc	W12703	EPENMAGG1S NM178S	EPENMAGG1S NM178S	Solar	4/1/2024	4/1/2024	4/30/2024	NM	N/A	18	12703-NM-04-2024-50D8BE80-1 to 18
NM RPS Active	9aa7ddf2-4ffc	W12704	EPENMAGG1S NM179S	EPENMAGG1S NM179S	Solar	4/1/2024	4/1/2024	4/30/2024	NM	N/A	14	12704-NM-04-2024-180F5A5B-1 to 14
NM RPS Active	9aa7ddf2-4ffc	W12744	EPENMAGG1S NM180S	EPENMAGG1S NM180S	Solar	4/1/2024	4/1/2024	4/30/2024	NM	N/A	13	12744-NM-04-2024-8D9E99A3-1 to 13
NM RPS Active	9aa7ddf2-4ffc	W12745	EPENMAGG1S NM181S	EPENMAGG1S NM181S	Solar	4/1/2024	4/1/2024	4/30/2024	NM	N/A	13	12745-NM-04-2024-E985B977-1 to 13
NM RPS Active	9aa7ddf2-4ffc	W13207	EPENMAGG1S NM182S	EPENMAGG1S NM182S	Solar	4/1/2024	4/1/2024	4/30/2024	NM	N/A	13	13207-NM-04-2024-822533DE-1 to 13
NM RPS Active	9aa7ddf2-4ffc	W13208	EPENMAGG1S NM183S	EPENMAGG1S NM183S	Solar	4/1/2024	4/1/2024	4/30/2024	NM	N/A	22	13208-NM-04-2024-F9F1F411-1 to 22
NM RPS Active	9aa7ddf2-4ffc	W13211	EPENMAGG1S NM185S	EPENMAGG1S NM185S	Solar	4/1/2024	4/1/2024	4/30/2024	NM	N/A	15	13211-NM-04-2024-B6F2B9D6-1 to 15
NM RPS Active	9aa7ddf2-4ffc	W13615	EPENMAGG1S NM186S	EPENMAGG1S NM186S	Solar	4/1/2024	4/1/2024	4/30/2024	NM	N/A	18	13615-NM-04-2024-136BA8CC-1 to 18
NM RPS Active	9aa7ddf2-4ffc	W13616	EPENMAGG1S NM187S	EPENMAGG1S NM187S	Solar	4/1/2024	4/1/2024	4/30/2024	NM	N/A	16	13616-NM-04-2024-04B72E5D-1 to 16
NM RPS Active	9aa7ddf2-4ffc	W13701	EPENMAGG1S NM188S	EPENMAGG1S NM188S	Solar	4/1/2024	4/1/2024	4/30/2024	NM	N/A	16	13701-NM-04-2024-D95FE4A7-1 to 16
NM RPS Active	9aa7ddf2-4ffc	W13702	EPENMAGG1S NM189S	EPENMAGG1S NM189S	Solar	4/1/2024	4/1/2024	4/30/2024	NM	N/A	12	13702-NM-04-2024-8A53F233-1 to 12
NM RPS Active	9aa7ddf2-4ffc	W13799	EPENMAGG1S NM190S	EPENMAGG1S NM190S	Solar	4/1/2024	4/1/2024	4/30/2024	NM	N/A	19	13799-NM-04-2024-356A68BC-1 to 19
NM RPS Active	9aa7ddf2-4ffc	W13801	EPENMAGG1S NM191S	EPENMAGG1S NM191S	Solar	4/1/2024	4/1/2024	4/30/2024	NM	N/A	11	13801-NM-04-2024-534EDF67-1 to 11
NM RPS Active	9aa7ddf2-4ffc	W13802	EPENMAGG1S NM192S	EPENMAGG1S NM192S	Solar	4/1/2024	4/1/2024	4/30/2024	NM	N/A	12	13802-NM-04-2024-35F0F396-1 to 12
NM RPS Active	9aa7ddf2-4ffc	W13803	EPENMAGG1S NM193S	EPENMAGG1S NM193S	Solar	4/1/2024	4/1/2024	4/30/2024	NM	N/A	12	13803-NM-04-2024-81389394-1 to 12
NM RPS Active	9aa7ddf2-4ffc	W13804	EPENMAGG1S NM194S	EPENMAGG1S NM194S	Solar	4/1/2024	4/1/2024	4/30/2024	NM	N/A	19	13804-NM-04-2024-FAC3093B-1 to 19
NM RPS Active	9aa7ddf2-4ffc	W13897	EPENMAGG1S NM195S	EPENMAGG1S NM195S	Solar	4/1/2024	4/1/2024	4/30/2024	NM	N/A	10	13897-NM-04-2024-15459B4F-1 to 10
NM RPS Active	9aa7ddf2-4ffc	W13898	EPENMAGG1S NM196S	EPENMAGG1S NM196S	Solar	4/1/2024	4/1/2024	4/30/2024	NM	N/A	18	13898-NM-04-2024-23BB9BB0-1 to 18
NM RPS Active	9aa7ddf2-4ffc	W13972	EPENMAGG1S NM197S	EPENMAGG1S NM197S	Solar	4/1/2024	4/1/2024	4/30/2024	NM	N/A	14	13972-NM-04-2024-3EDDFD3B-1 to 14
NM RPS Active	9aa7ddf2-4ffc	W13973	EPENMAGG1S NM198S	EPENMAGG1S NM198S	Solar	4/1/2024	4/1/2024	4/30/2024	NM	N/A	13	13973-NM-04-2024-2F6F05AC-1 to 13
NM RPS Active	9aa7ddf2-4ffc	W13975	EPENMAGG1S NM199S	EPENMAGG1S NM199S	Solar	4/1/2024	4/1/2024	4/30/2024	NM	N/A	14	13975-NM-04-2024-EA898F46-1 to 14
NM RPS Active	9aa7ddf2-4ffc	W14044	EPENMAGG1S NM200S	EPENMAGG1S NM200S	Solar	4/1/2024	4/1/2024	4/30/2024	NM	N/A	16	14044-NM-04-2024-30CBDFE6-1 to 16
NM RPS Active	9aa7ddf2-4ffc	W14045	EPENMAGG1S NM201S	EPENMAGG1S NM201S	Solar	4/1/2024	4/1/2024	4/30/2024	NM	SMUD	12	14045-NM-04-2024-9CA898A6-1 to 12
NM RPS Active	9aa7ddf2-4ffc	W14046	EPENMAGG1S NM202S	EPENMAGG1S NM202S	Solar	4/1/2024	4/1/2024	4/30/2024	NM	N/A	10	14046-NM-04-2024-2ACAF0F1-1 to 10
NM RPS Active	9aa7ddf2-4ffc	W14049	EPENMAGG1S NM204S	EPENMAGG1S NM204S	Solar	4/1/2024	4/1/2024	4/30/2024	NM	SMUD	17	14049-NM-04-2024-CB5C8C7D-1 to 17
NM RPS Active	9aa7ddf2-4ffc	W14225	N/A	EPENMAGG1S NM205S	Solar	4/1/2024	4/1/2024	4/30/2024	NM	N/A	12	14225-NM-04-2024-A00D02B3-1 to 12
NM RPS Active	9aa7ddf2-4ffc	W14230	N/A	EPENMAGG1S NM206S	Solar	4/1/2024	4/1/2024	4/30/2024	NM	N/A	13	14230-NM-04-2024-C3660A42-1 to 13
NM RPS Active	9aa7ddf2-4ffc	W14334	N/A	EPENMAGG1S NM207S	Solar	4/1/2024	4/1/2024	4/30/2024	NM	N/A	15	14334-NM-04-2024-36E99647-1 to 15
NM RPS Active	9aa7ddf2-4ffc	W15470	N/A	EPENMAGG1S NM208S	Solar	4/1/2024	4/1/2024	4/30/2024	NM	N/A	15	15470-NM-04-2024-D3BC1B61-1 to 15
NM RPS Active	9aa7ddf2-4ffc	W15471	N/A	EPENMAGG1S NM209S	Solar	4/1/2024	4/1/2024	4/30/2024	NM	N/A	13	15471-NM-04-2024-B16EB401-1 to 13
NM RPS Active	9aa7ddf2-4ffc	W15472	N/A	EPENMAGG1S NM210S	Solar	4/1/2024	4/1/2024	4/30/2024	NM	N/A	11	15472-NM-04-2024-D2779C25-1 to 11
NM RPS Active	9aa7ddf2-4ffc	W15473	N/A	EPENMAGG1S NM211S	Solar	4/1/2024	4/1/2024	4/30/2024	NM	N/A	13	15473-NM-04-2024-DB98B873-1 to 13
NM RPS Active	9aa7ddf2-4ffc	W15474	N/A	EPENMAGG1S NM212S	Solar	4/1/2024	4/1/2024	4/30/2024	NM	N/A	17	15474-NM-04-2024-1E7D3C6F-1 to 17
NM RPS Active	9aa7ddf2-4ffc	W15475	N/A	EPENMAGG1S NM213S	Solar	4/1/2024	4/1/2024	4/30/2024	NM	N/A	17	15475-NM-04-2024-AB2584D8-1 to 17
NM RPS Active	9aa7ddf2-4ffc	W15517	N/A	EPENMAGG1S NM214S	Solar	4/1/2024	4/1/2024	4/30/2024	NM	N/A	15	15517-NM-04-2024-ECC49854-1 to 15
NM RPS Active	9aa7ddf2-4ffc	W15518	N/A	EPENMAGG1S NM215S	Solar	4/1/2024	4/1/2024	4/30/2024	NM	N/A	14	15518-NM-04-2024-EFDF7D82-1 to 14
NM RPS Active	9aa7ddf2-4ffc	W15519	N/A	EPENMAGG1S NM216S	Solar	4/1/2024	4/1/2024	4/30/2024	NM	N/A	16	15519-NM-04-2024-99428FAE-1 to 16
NM RPS Active	9aa7ddf2-4ffc	W15520	N/A	EPENMAGG1S NM217S	Solar	4/1/2024	4/1/2024	4/30/2024	NM	N/A	10	15520-NM-04-2024-41C68F71-1 to 10
NM RPS Active	9aa7ddf2-4ffc	W15521	N/A	EPENMAGG1S NM218S	Solar	4/1/2024	4/1/2024	4/30/2024	NM	N/A	13	15521-NM-04-2024-3040CA9B-1 to 13

Account	Account ID	WREGIS GU ID	Unit Name	Facility Name	Fuel Type	Vintage	Generation Start Date	Generation End Date	Generator Location	Eligility	Quantity (RECs)	Serial Numbers
NM RPS Active	9aa7ddf2-4ffc	W15533	N/A	EPENMAGG1S NM219S	Solar	4/1/2024	4/1/2024	4/30/2024	NM	N/A	14	15533-NM-04-2024-04A08C7E-1 to 14
NM RPS Active	9aa7ddf2-4ffc	W15702	N/A	EPENMAGG1S NM220S	Solar	4/1/2024	4/1/2024	4/30/2024	NM	N/A	20	15702-NM-04-2024-ED0ADE82-1 to 20
NM RPS Active	9aa7ddf2-4ffc	W15703	N/A	EPENMAGG1S NM221S	Solar	4/1/2024	4/1/2024	4/30/2024	NM	N/A	15	15703-NM-04-2024-91362EAA-1 to 15
NM RPS Active	9aa7ddf2-4ffc	W15704	N/A	EPENMAGG1S NM222S	Solar	4/1/2024	4/1/2024	4/30/2024	NM	N/A	14	15704-NM-04-2024-6477CBED-1 to 14
NM RPS Active	9aa7ddf2-4ffc	W15705	N/A	EPENMAGG1S NM223S	Solar	4/1/2024	4/1/2024	4/30/2024	NM	N/A	24	15705-NM-04-2024-16AE7B25-1 to 24
NM RPS Active	9aa7ddf2-4ffc	W16065	N/A	EPENMAGG1S NM224S	Solar	4/1/2024	4/1/2024	4/30/2024	NM	N/A	12	16065-NM-04-2024-29382A6C-1 to 12
NM RPS Active	9aa7ddf2-4ffc	W16066	N/A	EPENMAGG1S NM225S	Solar	4/1/2024	4/1/2024	4/30/2024	NM	N/A	14	16066-NM-04-2024-8115AC1A-1 to 14
NM RPS Active	9aa7ddf2-4ffc	W16067	N/A	EPENMAGG1S NM226S	Solar	4/1/2024	4/1/2024	4/30/2024	NM	N/A	11	16067-NM-04-2024-0D3717A2-1 to 11
NM RPS Active	9aa7ddf2-4ffc	W16490	N/A	EPENMAGG1S NM227S	Solar	4/1/2024	4/1/2024	4/30/2024	NM	N/A	13	16490-NM-04-2024-E6525854-1 to 13
NM RPS Active	9aa7ddf2-4ffc	W16492	N/A	EPENMAGG1S NM229S	Solar	4/1/2024	4/1/2024	4/30/2024	NM	N/A	17	16492-NM-04-2024-F72F6403-1 to 17
NM RPS Active	9aa7ddf2-4ffc	W16493	N/A	EPENMAGG1S NM230S	Solar	4/1/2024	4/1/2024	4/30/2024	NM	N/A	12	16493-NM-04-2024-D24CC4D8-1 to 12
NM RPS Active	9aa7ddf2-4ffc	W16494	N/A	EPENMAGG1S NM231S	Solar	4/1/2024	4/1/2024	4/30/2024	NM	N/A	18	16494-NM-04-2024-CB8752F9-1 to 18
NM RPS Active	9aa7ddf2-4ffc	W17425	N/A	EPENMAGG1S NM232S	Solar	4/1/2024	4/1/2024	4/30/2024	NM	N/A	13	17425-NM-04-2024-5C4452BA-1 to 13
NM RPS Active	9aa7ddf2-4ffc	W17426	N/A	EPENMAGG1S NM233S	Solar	4/1/2024	4/1/2024	4/30/2024	NM	N/A	13	17426-NM-04-2024-F083D9AC-1 to 13
NM RPS Active	9aa7ddf2-4ffc	W17427	N/A	EPENMAGG1S NM235S	Solar	4/1/2024	4/1/2024	4/30/2024	NM	N/A	15	17427-NM-04-2024-39BE6DBF-1 to 15
NM RPS Active	9aa7ddf2-4ffc	W17428	N/A	EPENMAGG1S NM236S	Solar	4/1/2024	4/1/2024	4/30/2024	NM	N/A	15	17428-NM-04-2024-DDB157C2-1 to 15
NM RPS Active	9aa7ddf2-4ffc	W17429	N/A	EPENMAGG1S NM237S	Solar	4/1/2024	4/1/2024	4/30/2024	NM	N/A	14	17429-NM-04-2024-762F279A-1 to 14
NM RPS Active	9aa7ddf2-4ffc	W17430	N/A	EPENMAGG1S NM238S	Solar	4/1/2024	4/1/2024	4/30/2024	NM	N/A	19	17430-NM-04-2024-C0DC5B22-1 to 19
NM RPS Active	9aa7ddf2-4ffc	W17431	N/A	EPENMAGG1S NM239S	Solar	4/1/2024	4/1/2024	4/30/2024	NM	N/A	18	17431-NM-04-2024-F3883F7C-1 to 18
NM RPS Active	9aa7ddf2-4ffc	W17432	N/A	EPENMAGG1S NM240S	Solar	4/1/2024	4/1/2024	4/30/2024	NM	N/A	17	17432-NM-04-2024-7384A934-1 to 17
NM RPS Active	9aa7ddf2-4ffc	W17433	N/A	EPENMAGG1S NM241S	Solar	4/1/2024	4/1/2024	4/30/2024	NM	N/A	15	17433-NM-04-2024-3375BD25-1 to 15
NM RPS Active	9aa7ddf2-4ffc	W17434	N/A	EPENMAGG1S NM242S	Solar	4/1/2024	4/1/2024	4/30/2024	NM	N/A	12	17434-NM-04-2024-C63E5412-1 to 12
NM RPS Active	9aa7ddf2-4ffc	W17435	N/A	EPENMAGG1S NM243S	Solar	4/1/2024	4/1/2024	4/30/2024	NM	N/A	16	17435-NM-04-2024-EC8F2348-1 to 16
NM RPS Active	9aa7ddf2-4ffc	W17436	N/A	EPENMAGG1S NM244S	Solar	4/1/2024	4/1/2024	4/30/2024	NM	N/A	18	17436-NM-04-2024-0B14C63C-1 to 18
NM RPS Active	9aa7ddf2-4ffc	W17546	N/A	EPENMAGG1S NM245S	Solar	4/1/2024	4/1/2024	4/30/2024	NM	N/A	14	17546-NM-04-2024-D98CD0AA-1 to 14
NM RPS Active	9aa7ddf2-4ffc	W17824	N/A	EPENMAGG1S NM246S	Solar	4/1/2024	4/1/2024	4/30/2024	NM	N/A	14	17824-NM-04-2024-BADBEE13-1 to 14
NM RPS Active	9aa7ddf2-4ffc	W17825	N/A	EPENMAGG1S NM247S	Solar	4/1/2024	4/1/2024	4/30/2024	NM	N/A	16	17825-NM-04-2024-CDBAA5A7-1 to 16
NM RPS Active	9aa7ddf2-4ffc	W18165	N/A	EPENMAGG1S NM248S	Solar	4/1/2024	4/1/2024	4/30/2024	NM	N/A	16	18165-NM-04-2024-AD8620F1-1 to 16
NM RPS Active	9aa7ddf2-4ffc	W18166	N/A	EPENMAGG1S NM249S	Solar	4/1/2024	4/1/2024	4/30/2024	NM	N/A	18	18166-NM-04-2024-35634DED-1 to 18
NM RPS Active	9aa7ddf2-4ffc	W18167	N/A	EPENMAGG1S NM250S	Solar	4/1/2024	4/1/2024	4/30/2024	NM	N/A	19	18167-NM-04-2024-5B892898-1 to 19
NM RPS Active	9aa7ddf2-4ffc	W18279	N/A	EPENMAGG1S NM251S	Solar	4/1/2024	4/1/2024	4/30/2024	NM	N/A	13	18279-NM-04-2024-D568107A-1 to 13
NM RPS Active	9aa7ddf2-4ffc	W18280	N/A	EPENMAGG1S NM252S	Solar	4/1/2024	4/1/2024	4/30/2024	NM	N/A	9	18280-NM-04-2024-C4511067-1 to 9
NM RPS Active	9aa7ddf2-4ffc	W18547	N/A	EPENMAGG1S NM253S	Solar	4/1/2024	4/1/2024	4/30/2024	NM	N/A	5	18547-NM-04-2024-B403FE2F-1 to 5
NM RPS Active	9aa7ddf2-4ffc	W10345	EPE NM120S - The Power Center Inc	EPE NM120S	Solar	5/1/2024	5/1/2024	5/31/2024	NM	N/A	2	10345-NM-05-2024-45B2028C-1 to 2
NM RPS Active	9aa7ddf2-4ffc	W12650	EPE NM175S - City of Las Cruces - Utilities - Waste Water	EPE NM175S	Solar	5/1/2024	5/1/2024	5/31/2024	NM	N/A	13	12650-NM-05-2024-915AFF28-1 to 13
NM RPS Active	9aa7ddf2-4ffc	W3622	EPENMAGG1S NM001S	EPENMAGG1S NM001S	Solar	5/1/2024	5/1/2024	5/31/2024	NM	N/A	12	3622-NM-05-2024-1FB3D40A-1 to 12
NM RPS Active	9aa7ddf2-4ffc	W3624	EPENMAGG1S NM002S	EPENMAGG1S NM002S	Solar	5/1/2024	5/1/2024	5/31/2024	NM	N/A	10	3624-NM-05-2024-A1FC6505-1 to 10
NM RPS Active	9aa7ddf2-4ffc	W3637	EPENMAGG1S NM003S	EPENMAGG1S NM003S	Solar	5/1/2024	5/1/2024	5/31/2024	NM	N/A	16	3637-NM-05-2024-FC315471-1 to 16
NM RPS Active	9aa7ddf2-4ffc	W3638	EPENMAGG1S NM004S	EPENMAGG1S NM004S	Solar	5/1/2024	5/1/2024	5/31/2024	NM	N/A	14	3638-NM-05-2024-ABA842A8-1 to 14
NM RPS Active	9aa7ddf2-4ffc	W3639	EPENMAGG1s NM005S	EPENMAGG1s NM005S	Solar	5/1/2024	5/1/2024	5/31/2024	NM	N/A	10	3639-NM-05-2024-295B9C9D-1 to 10
NM RPS Active	9aa7ddf2-4ffc	W3641	EPENMAGG1s NM007S	EPENMAGG1s NM007S	Solar	5/1/2024	5/1/2024	5/31/2024	NM	N/A	6	3641-NM-05-2024-474A17A9-1 to 6
NM RPS Active	9aa7ddf2-4ffc	W3642	EPENMAGG1s NM008S	EPENMAGG1s NM008S	Solar	5/1/2024	5/1/2024	5/31/2024	NM	N/A	11	3642-NM-05-2024-821FB21B-1 to 11
NM RPS Active	9aa7ddf2-4ffc	W3643	EPENMAGG1s NM009S	EPENMAGG1s NM009S	Solar	5/1/2024	5/1/2024	5/31/2024	NM	N/A	11	3643-NM-05-2024-44567B79-1 to 11
NM RPS Active	9aa7ddf2-4ffc	W3644	EPENMAGG1S NM010S	EPENMAGG1S NM010S	Solar	5/1/2024	5/1/2024	5/31/2024	NM	N/A	10	3644-NM-05-2024-CCC26CB0-1 to 10
NM RPS Active	9aa7ddf2-4ffc	W3645	EPENMAGG1S NM011S	EPENMAGG1S NM011S	Solar	5/1/2024	5/1/2024	5/31/2024	NM	N/A	9	3645-NM-05-2024-391817BF-1 to 9
NM RPS Active	9aa7ddf2-4ffc	W3646	EPENMAGG1S NM012S	EPENMAGG1S NM012S	Solar	5/1/2024	5/1/2024	5/31/2024	NM	N/A	9	3646-NM-05-2024-737EAB67-1 to 9
NM RPS Active	9aa7ddf2-4ffc	W3647	EPENMAGG1S NM013S	EPENMAGG1S NM013S	Solar	5/1/2024	5/1/2024	5/31/2024	NM	N/A	10	3647-NM-05-2024-0EC6BC94-1 to 10
NM RPS Active	9aa7ddf2-4ffc	W3650	EPENMAGG1S NM016S	EPENMAGG1S NM016S	Solar	5/1/2024	5/1/2024	5/31/2024	NM	N/A	9	3650-NM-05-2024-881E1828-1 to 9
NM RPS Active	9aa7ddf2-4ffc	W3651	EPENMAGG1S NM017S	EPENMAGG1S NM017S	Solar	5/1/2024	5/1/2024	5/31/2024	NM	N/A	12	3651-NM-05-2024-9D595DE7-1 to 12
NM RPS Active	9aa7ddf2-4ffc	W3652	EPENMAGG1S NM018S	EPENMAGG1S NM018S	Solar	5/1/2024	5/1/2024	5/31/2024	NM	N/A	13	3652-NM-05-2024-7723FE7F-1 to 13
NM RPS Active	9aa7ddf2-4ffc	W3653	EPENMAGG1S NM019S	EPENMAGG1S NM019S	Solar	5/1/2024	5/1/2024	5/31/2024	NM	N/A	7	3653-NM-05-2024-0BEE858C-1 to 7
NM RPS Active	9aa7ddf2-4ffc	W3654	EPENMAGG1S NM020S	EPENMAGG1S NM020S	Solar	5/1/2024	5/1/2024	5/31/2024	NM	N/A	10	3654-NM-05-2024-0BE3845C-1 to 10
NM RPS Active	9aa7ddf2-4ffc	W3655	EPENMAGG1S NM021S	EPENMAGG1S NM021S	Solar	5/1/2024	5/1/2024	5/31/2024	NM	N/A	13	3655-NM-05-2024-AAE035A9-1 to 13
NM RPS Active	9aa7ddf2-4ffc	W3656	EPENMAGG1S NM022S	EPENMAGG1S NM022S	Solar	5/1/2024	5/1/2024	5/31/2024	NM	N/A	14	3656-NM-05-2024-5D34F6D1-1 to 14
NM RPS Active	9aa7ddf2-4ffc	W3657	EPENMAGG1S NM023S	EPENMAGG1S NM023S	Solar	5/1/2024	5/1/2024	5/31/2024	NM	N/A	14	3657-NM-05-2024-42E362E0-1 to 14

Account	Account ID	WREGIS GU ID	Unit Name	Facility Name	Fuel Type	Vintage	Generation Start Date	Generation End Date	Generator Location	Eligility	Quantity (RECs)	Serial Numbers
NM RPS Active	9aa7ddf2-4ffc	W3658	EPENMAGG1S NM024S	EPENMAGG1S NM024S	Solar	5/1/2024	5/1/2024	5/31/2024	NM	N/A	11	3658-NM-05-2024-2089802C-1 to 11
NM RPS Active	9aa7ddf2-4ffc	W3659	EPENMAGG1S NM025S	EPENMAGG1S NM025S	Solar	5/1/2024	5/1/2024	5/31/2024	NM	N/A	10	3659-NM-05-2024-F4977AC2-1 to 10
NM RPS Active	9aa7ddf2-4ffc	W3660	EPENMAGG1S NM026S	EPENMAGG1S NM026S	Solar	5/1/2024	5/1/2024	5/31/2024	NM	N/A	15	3660-NM-05-2024-34072A29-1 to 15
NM RPS Active	9aa7ddf2-4ffc	W3838	EPENMAGG1S NM027S	EPENMAGG1S NM027S	Solar	5/1/2024	5/1/2024	5/31/2024	NM	N/A	17	3838-NM-05-2024-2CA2F8DC-1 to 17
NM RPS Active	9aa7ddf2-4ffc	W3839	EPENMAGG1S NM028S	EPENMAGG1S NM028S	Solar	5/1/2024	5/1/2024	5/31/2024	NM	N/A	14	3839-NM-05-2024-B1ADA3F0-1 to 14
NM RPS Active	9aa7ddf2-4ffc	W3946	EPENMAGG1S NM029S	EPENMAGG1S NM029S	Solar	5/1/2024	5/1/2024	5/31/2024	NM	N/A	8	3946-NM-05-2024-E1A1AD87-1 to 8
NM RPS Active	9aa7ddf2-4ffc	W3947	EPENMAGG1S NM030S	EPENMAGG1S NM030S	Solar	5/1/2024	5/1/2024	5/31/2024	NM	N/A	6	3947-NM-05-2024-DCD8DEC2-1 to 6
NM RPS Active	9aa7ddf2-4ffc	W3948	EPENMAGG1S NM031S	EPENMAGG1S NM031S	Solar	5/1/2024	5/1/2024	5/31/2024	NM	N/A	4	3948-NM-05-2024-501C15D4-1 to 4
NM RPS Active	9aa7ddf2-4ffc	W3949	EPENMAGG1S NM032S	EPENMAGG1S NM032S	Solar	5/1/2024	5/1/2024	5/31/2024	NM	N/A	10	3949-NM-05-2024-426DF8C1-1 to 10
NM RPS Active	9aa7ddf2-4ffc	W3950	EPENMAGG1S NM033S	EPENMAGG1S NM033S	Solar	5/1/2024	5/1/2024	5/31/2024	NM	N/A	5	3950-NM-05-2024-57422271-1 to 5
NM RPS Active	9aa7ddf2-4ffc	W3951	EPENMAGG1S NM034S	EPENMAGG1S NM034S	Solar	5/1/2024	5/1/2024	5/31/2024	NM	N/A	6	3951-NM-05-2024-A6C3A6D5-1 to 6
NM RPS Active	9aa7ddf2-4ffc	W3952	EPENMAGG1S NM035S	EPENMAGG1S NM035S	Solar	5/1/2024	5/1/2024	5/31/2024	NM	N/A	15	3952-NM-05-2024-E68E38E5-1 to 15
NM RPS Active	9aa7ddf2-4ffc	W4101	EPENMAGG1S NM036S	EPENMAGG1S NM036S	Solar	5/1/2024	5/1/2024	5/31/2024	NM	N/A	14	4101-NM-05-2024-2A377F39-1 to 14
NM RPS Active	9aa7ddf2-4ffc	W4121	EPENMAGG1S NM037S	EPENMAGG1S NM037S	Solar	5/1/2024	5/1/2024	5/31/2024	NM	N/A	12	4121-NM-05-2024-84A20D5D-1 to 12
NM RPS Active	9aa7ddf2-4ffc	W4221	EPENMAGG1S NM038S	EPENMAGG1S NM038S	Solar	5/1/2024	5/1/2024	5/31/2024	NM	N/A	23	4221-NM-05-2024-0E7E9469-1 to 23
NM RPS Active	9aa7ddf2-4ffc	W4270	EPENMAGG1S NM039S	EPENMAGG1S NM039S	Solar	5/1/2024	5/1/2024	5/31/2024	NM	N/A	14	4270-NM-05-2024-7807CDC7-1 to 14
NM RPS Active	9aa7ddf2-4ffc	W4341	EPENMAGG1S NM040S	EPENMAGG1S NM040S	Solar	5/1/2024	5/1/2024	5/31/2024	NM	N/A	3	4341-NM-05-2024-E7959D3E-1 to 3
NM RPS Active	9aa7ddf2-4ffc	W4412	EPENMAGG1S NM041S	EPENMAGG1S NM041S	Solar	5/1/2024	5/1/2024	5/31/2024	NM	N/A	9	4412-NM-05-2024-C339C4F3-1 to 9
NM RPS Active	9aa7ddf2-4ffc	W4437	EPENMAGG1S NM042S	EPENMAGG1S NM042S	Solar	5/1/2024	5/1/2024	5/31/2024	NM	N/A	14	4437-NM-05-2024-7A81C7B4-1 to 14
NM RPS Active	9aa7ddf2-4ffc	W4459	EPENMAGG1S NM043S	EPENMAGG1S NM043S	Solar	5/1/2024	5/1/2024	5/31/2024	NM	N/A	14	4459-NM-05-2024-FD8DDAEA-1 to 14
NM RPS Active	9aa7ddf2-4ffc	W4507	EPENMAGG1S NM044S	EPENMAGG1S NM044S	Solar	5/1/2024	5/1/2024	5/31/2024	NM	N/A	15	4507-NM-05-2024-5B718160-1 to 15
NM RPS Active	9aa7ddf2-4ffc	W4649	EPENMAGG1S NM045S	EPENMAGG1S NM045S	Solar	5/1/2024	5/1/2024	5/31/2024	NM	N/A	14	4649-NM-05-2024-FB9FF089-1 to 14
NM RPS Active	9aa7ddf2-4ffc	W4704	EPENMAGG1S NM046S	EPENMAGG1S NM046S	Solar	5/1/2024	5/1/2024	5/31/2024	NM	N/A	16	4704-NM-05-2024-346A875B-1 to 16
NM RPS Active	9aa7ddf2-4ffc	W4732	EPENMAGG1S NM047S	EPENMAGG1S NM047S	Solar	5/1/2024	5/1/2024	5/31/2024	NM	N/A	17	4732-NM-05-2024-81EBFE06-1 to 17
NM RPS Active	9aa7ddf2-4ffc	W4806	EPENMAGG1S NM048S	EPENMAGG1S NM048S	Solar	5/1/2024	5/1/2024	5/31/2024	NM	N/A	10	4806-NM-05-2024-DA2FE6D2-1 to 10
NM RPS Active	9aa7ddf2-4ffc	W4833	EPENMAGG1S NM049S	EPENMAGG1S NM049S	Solar	5/1/2024	5/1/2024	5/31/2024	NM	N/A	13	4833-NM-05-2024-9AD73855-1 to 13
NM RPS Active	9aa7ddf2-4ffc	W4842	EPENMAGG1S NM050S	EPENMAGG1S NM050S	Solar	5/1/2024	5/1/2024	5/31/2024	NM	N/A	9	4842-NM-05-2024-A212811E-1 to 9
NM RPS Active	9aa7ddf2-4ffc	W4843	EPENMAGG1S NM051S	EPENMAGG1S NM051S	Solar	5/1/2024	5/1/2024	5/31/2024	NM	N/A	10	4843-NM-05-2024-C8E320FE-1 to 10
NM RPS Active	9aa7ddf2-4ffc	W4961	EPENMAGG1S NM052S	EPENMAGG1S NM052S	Solar	5/1/2024	5/1/2024	5/31/2024	NM	N/A	15	4961-NM-05-2024-5A30F9E6-1 to 15
NM RPS Active	9aa7ddf2-4ffc	W5022	EPENMAGG1S NM053S	EPENMAGG1S NM053S	Solar	5/1/2024	5/1/2024	5/31/2024	NM	N/A	32	5022-NM-05-2024-EE4A71E5-1 to 32
NM RPS Active	9aa7ddf2-4ffc	W5071	EPENMAGG1S NM054S	EPENMAGG1S NM054S	Solar	5/1/2024	5/1/2024	5/31/2024	NM	N/A	10	5071-NM-05-2024-24196041-1 to 10
NM RPS Active	9aa7ddf2-4ffc	W5080	EPENMAGG1S NM056S	EPENMAGG1S NM056S	Solar	5/1/2024	5/1/2024	5/31/2024	NM	N/A	14	5080-NM-05-2024-86C8891A-1 to 14
NM RPS Active	9aa7ddf2-4ffc	W5111	EPENMAGG1S NM057S	EPENMAGG1S NM057S	Solar	5/1/2024	5/1/2024	5/31/2024	NM	N/A	19	5111-NM-05-2024-2591B3CE-1 to 19
NM RPS Active	9aa7ddf2-4ffc	W5112	EPENMAGG1S NM058S	EPENMAGG1S NM058S	Solar	5/1/2024	5/1/2024	5/31/2024	NM	N/A	14	5112-NM-05-2024-6B19C82E-1 to 14
NM RPS Active	9aa7ddf2-4ffc	W5280	EPENMAGG1S NM059S	EPENMAGG1S NM059S	Solar	5/1/2024	5/1/2024	5/31/2024	NM	N/A	3	5280-NM-05-2024-AB1AD1C3-1 to 3
NM RPS Active	9aa7ddf2-4ffc	W5318	EPENMAGG1S NM060S	EPENMAGG1S NM060S	Solar	5/1/2024	5/1/2024	5/31/2024	NM	SMUD	11	5318-NM-05-2024-772253B6-1 to 11
NM RPS Active	9aa7ddf2-4ffc	W5320	EPENMAGG1S NM062S	EPENMAGG1S NM062S	Solar	5/1/2024	5/1/2024	5/31/2024	NM	N/A	15	5320-NM-05-2024-8886EDC7-1 to 15
NM RPS Active	9aa7ddf2-4ffc	W5379	EPENMAGG1S NM063S	EPENMAGG1S NM063S	Solar	5/1/2024	5/1/2024	5/31/2024	NM	N/A	13	5379-NM-05-2024-8CF34F5D-1 to 13
NM RPS Active	9aa7ddf2-4ffc	W5469	EPENMAGG1S NM064S	EPENMAGG1S NM064S	Solar	5/1/2024	5/1/2024	5/31/2024	NM	N/A	13	5469-NM-05-2024-68E95CA5-1 to 13
NM RPS Active	9aa7ddf2-4ffc	W5547	EPENMAGG1S NM065S	EPENMAGG1S NM065S	Solar	5/1/2024	5/1/2024	5/31/2024	NM	N/A	10	5547-NM-05-2024-456C1F1E-1 to 10
NM RPS Active	9aa7ddf2-4ffc	W5553	EPENMAGG1S NM066S	EPENMAGG1S NM066S	Solar	5/1/2024	5/1/2024	5/31/2024	NM	N/A	1	5553-NM-05-2024-E533CDD4-1 to 1
NM RPS Active	9aa7ddf2-4ffc	W5652	EPENMAGG1S NM067S	EPENMAGG1S NM067S	Solar	5/1/2024	5/1/2024	5/31/2024	NM	N/A	11	5652-NM-05-2024-8E2AC881-1 to 11
NM RPS Active	9aa7ddf2-4ffc	W5742	EPENMAGG1S NM070S	EPENMAGG1S NM070S	Solar	5/1/2024	5/1/2024	5/31/2024	NM	N/A	13	5742-NM-05-2024-18EB99CE-1 to 13
NM RPS Active	9aa7ddf2-4ffc	W5790	EPENMAGG1S NM071S	EPENMAGG1S NM071S	Solar	5/1/2024	5/1/2024	5/31/2024	NM	N/A	11	5790-NM-05-2024-DCF1FEAE-1 to 11
NM RPS Active	9aa7ddf2-4ffc	W5869	EPENMAGG1S NM073S	EPENMAGG1S NM073S	Solar	5/1/2024	5/1/2024	5/31/2024	NM	N/A	1	5869-NM-05-2024-D0FA701D-1 to 1
NM RPS Active	9aa7ddf2-4ffc	W7116	EPENMAGG1S NM074S	EPENMAGG1S NM074S	Solar	5/1/2024	5/1/2024	5/31/2024	NM	N/A	13	7116-NM-05-2024-8063B754-1 to 13
NM RPS Active	9aa7ddf2-4ffc	W7117	EPENMAGG1S NM075S	EPENMAGG1S NM075S	Solar	5/1/2024	5/1/2024	5/31/2024	NM	N/A	15	7117-NM-05-2024-E7BFC323-1 to 15
NM RPS Active	9aa7ddf2-4ffc	W7118	EPENMAGG1S NM076S	EPENMAGG1S NM076S	Solar	5/1/2024	5/1/2024	5/31/2024	NM	N/A	10	7118-NM-05-2024-BC5EDA90-1 to 10
NM RPS Active	9aa7ddf2-4ffc	W7119	EPENMAGG1S NM077S	EPENMAGG1S NM077S	Solar	5/1/2024	5/1/2024	5/31/2024	NM	N/A	19	7119-NM-05-2024-67982D61-1 to 19
NM RPS Active	9aa7ddf2-4ffc	W7120	EPENMAGG1S NM078S	EPENMAGG1S NM078S	Solar	5/1/2024	5/1/2024	5/31/2024	NM	N/A	12	7120-NM-05-2024-A9059B69-1 to 12
NM RPS Active	9aa7ddf2-4ffc	W7121	EPENMAGG1S NM079S	EPENMAGG1S NM079S	Solar	5/1/2024	5/1/2024	5/31/2024	NM	N/A	15	7121-NM-05-2024-9F819D74-1 to 15
NM RPS Active	9aa7ddf2-4ffc	W7324	EPENMAGG1S NM080S	EPENMAGG1S NM080S	Solar	5/1/2024	5/1/2024	5/31/2024	NM	N/A	24	7324-NM-05-2024-C8BCA2D6-1 to 24
NM RPS Active	9aa7ddf2-4ffc	W7325	EPENMAGG1S NM081S	EPENMAGG1S NM081S	Solar	5/1/2024	5/1/2024	5/31/2024	NM	N/A	16	7325-NM-05-2024-CF4A64B2-1 to 16
NM RPS Active	9aa7ddf2-4ffc	W7332	EPENMAGG1S NM082S	EPENMAGG1S NM082S	Solar	5/1/2024	5/1/2024	5/31/2024	NM	N/A	15	7332-NM-05-2024-5B07ECBB-1 to 15
NM RPS Active	9aa7ddf2-4ffc	W7333	EPENMAGG1S NM083S	EPENMAGG1S NM083S	Solar	5/1/2024	5/1/2024	5/31/2024	NM	N/A	22	7333-NM-05-2024-AE2DCA98-1 to 22
NM RPS Active	9aa7ddf2-4ffc	W7424	EPENMAGG1S NM084S	EPENMAGG1S NM084S	Solar	5/1/2024	5/1/2024	5/31/2024	NM	N/A	16	7424-NM-05-2024-A73E6C90-1 to 16
NM RPS Active	9aa7ddf2-4ffc	W7425	EPENMAGG1S NM085S	EPENMAGG1S NM085S	Solar	5/1/2024	5/1/2024	5/31/2024	NM	N/A	14	7425-NM-05-2024-C3DA6882-1 to 14
NM RPS Active	9aa7ddf2-4ffc	W7547	EPENMAGG1S NM086S	EPENMAGG1S NM086S	Solar	5/1/2024	5/1/2024	5/31/2024	NM	N/A	14	7547-NM-05-2024-AB9B8AA5-1 to 14

Account	Account ID	WREGIS GU ID	Unit Name	Facility Name	Fuel Type	Vintage	Generation Start Date	Generation End Date	Generator Location	Eligility	Quantity (RECs)	Serial Numbers
NM RPS Active	9aa7ddf2-4ffc	W7554	EPENMAGG1S NM087S	EPENMAGG1S NM087S	Solar	5/1/2024	5/1/2024	5/31/2024	NM	N/A	15	7554-NM-05-2024-0BACFF1B-1 to 15
NM RPS Active	9aa7ddf2-4ffc	W7555	EPENMAGG1S NM088S	EPENMAGG1S NM088S	Solar	5/1/2024	5/1/2024	5/31/2024	NM	N/A	10	7555-NM-05-2024-069D4EDA-1 to 10
NM RPS Active	9aa7ddf2-4ffc	W7556	EPENMAGG1S NM089S	EPENMAGG1S NM089S	Solar	5/1/2024	5/1/2024	5/31/2024	NM	N/A	12	7556-NM-05-2024-B661BE4F-1 to 12
NM RPS Active	9aa7ddf2-4ffc	W7557	EPENMAGG1S NM090S	EPENMAGG1S NM090S	Solar	5/1/2024	5/1/2024	5/31/2024	NM	N/A	9	7557-NM-05-2024-E5E423A8-1 to 9
NM RPS Active	9aa7ddf2-4ffc	W7558	EPENMAGG1S NM091S	EPENMAGG1S NM091S	Solar	5/1/2024	5/1/2024	5/31/2024	NM	N/A	11	7558-NM-05-2024-071F8052-1 to 11
NM RPS Active	9aa7ddf2-4ffc	W7559	EPENMAGG1S NM092S	EPENMAGG1S NM092S	Solar	5/1/2024	5/1/2024	5/31/2024	NM	N/A	17	7559-NM-05-2024-BD7E3424-1 to 17
NM RPS Active	9aa7ddf2-4ffc	W7561	EPENMAGG1S NM093S	EPENMAGG1S NM093S	Solar	5/1/2024	5/1/2024	5/31/2024	NM	N/A	12	7561-NM-05-2024-E40D4AF9-1 to 12
NM RPS Active	9aa7ddf2-4ffc	W7671	EPENMAGG1S NM094S	EPENMAGG1S NM094S	Solar	5/1/2024	5/1/2024	5/31/2024	NM	N/A	6	7671-NM-05-2024-9A71F9F8-1 to 6
NM RPS Active	9aa7ddf2-4ffc	W7672	EPENMAGG1S NM095S	EPENMAGG1S NM095S	Solar	5/1/2024	5/1/2024	5/31/2024	NM	N/A	9	7672-NM-05-2024-6488A450-1 to 9
NM RPS Active	9aa7ddf2-4ffc	W7673	EPENMAGG1S NM096S	EPENMAGG1S NM096S	Solar	5/1/2024	5/1/2024	5/31/2024	NM	N/A	14	7673-NM-05-2024-8FA75775-1 to 14
NM RPS Active	9aa7ddf2-4ffc	W7674	EPENMAGG1S NM097S	EPENMAGG1S NM097S	Solar	5/1/2024	5/1/2024	5/31/2024	NM	N/A	17	7674-NM-05-2024-CD2D6EAD-1 to 17
NM RPS Active	9aa7ddf2-4ffc	W7699	EPENMAGG1S NM098S	EPENMAGG1S NM098S	Solar	5/1/2024	5/1/2024	5/31/2024	NM	N/A	16	7699-NM-05-2024-5EB4E8D3-1 to 16
NM RPS Active	9aa7ddf2-4ffc	W7700	EPENMAGG1S NM099S	EPENMAGG1S NM099S	Solar	5/1/2024	5/1/2024	5/31/2024	NM	N/A	14	7700-NM-05-2024-0D6B1F8D-1 to 14
NM RPS Active	9aa7ddf2-4ffc	W8123	EPENMAGG1S NM100S	EPENMAGG1S NM100S	Solar	5/1/2024	5/1/2024	5/31/2024	NM	N/A	14	8123-NM-05-2024-5E992497-1 to 14
NM RPS Active	9aa7ddf2-4ffc	W8124	EPENMAGG1S NM101S	EPENMAGG1S NM101S	Solar	5/1/2024	5/1/2024	5/31/2024	NM	N/A	19	8124-NM-05-2024-CE5B6F2B-1 to 19
NM RPS Active	9aa7ddf2-4ffc	W8197	EPENMAGG1S NM102S	EPENMAGG1S NM102S	Solar	5/1/2024	5/1/2024	5/31/2024	NM	N/A	13	8197-NM-05-2024-CE83523E-1 to 13
NM RPS Active	9aa7ddf2-4ffc	W8198	EPENMAGG1S NM103S	EPENMAGG1S NM103S	Solar	5/1/2024	5/1/2024	5/31/2024	NM	N/A	14	8198-NM-05-2024-4AD63026-1 to 14
NM RPS Active	9aa7ddf2-4ffc	W8794	EPENMAGG1S NM104S	EPENMAGG1S NM104S	Solar	5/1/2024	5/1/2024	5/31/2024	NM	N/A	19	8794-NM-05-2024-EF346739-1 to 19
NM RPS Active	9aa7ddf2-4ffc	W8835	EPENMAGG1S NM105S	EPENMAGG1S NM105S	Solar	5/1/2024	5/1/2024	5/31/2024	NM	N/A	11	8835-NM-05-2024-1BF3CF6F-1 to 11
NM RPS Active	9aa7ddf2-4ffc	W8836	EPENMAGG1S NM106S	EPENMAGG1S NM106S	Solar	5/1/2024	5/1/2024	5/31/2024	NM	N/A	14	8836-NM-05-2024-0B843273-1 to 14
NM RPS Active	9aa7ddf2-4ffc	W9324	EPENMAGG1S NM107S	EPENMAGG1S NM107S	Solar	5/1/2024	5/1/2024	5/31/2024	NM	N/A	13	9324-NM-05-2024-98716785-1 to 13
NM RPS Active	9aa7ddf2-4ffc	W9325	EPENMAGG1S NM108S	EPENMAGG1S NM108S	Solar	5/1/2024	5/1/2024	5/31/2024	NM	N/A	22	9325-NM-05-2024-D812BEF8-1 to 22
NM RPS Active	9aa7ddf2-4ffc	W9344	EPENMAGG1S NM109S	EPENMAGG1S NM109S	Solar	5/1/2024	5/1/2024	5/31/2024	NM	N/A	12	9344-NM-05-2024-07ADF898-1 to 12
NM RPS Active	9aa7ddf2-4ffc	W9345	EPENMAGG1S NM110S	EPENMAGG1S NM110S	Solar	5/1/2024	5/1/2024	5/31/2024	NM	N/A	20	9345-NM-05-2024-3C10F393-1 to 20
NM RPS Active	9aa7ddf2-4ffc	W9602	EPENMAGG1S NM111S	EPENMAGG1S NM111S	Solar	5/1/2024	5/1/2024	5/31/2024	NM	N/A	18	9602-NM-05-2024-6E02F178-1 to 18
NM RPS Active	9aa7ddf2-4ffc	W9603	EPENMAGG1S NM112S	EPENMAGG1S NM112S	Solar	5/1/2024	5/1/2024	5/31/2024	NM	N/A	14	9603-NM-05-2024-A77E1B8C-1 to 14
NM RPS Active	9aa7ddf2-4ffc	W10025	EPENMAGG1S NM113S	EPENMAGG1S NM113S	Solar	5/1/2024	5/1/2024	5/31/2024	NM	N/A	9	10025-NM-05-2024-A95EC606-1 to 9
NM RPS Active	9aa7ddf2-4ffc	W10026	EPENMAGG1S NM114S	EPENMAGG1S NM114S	Solar	5/1/2024	5/1/2024	5/31/2024	NM	N/A	11	10026-NM-05-2024-38AAFE7C-1 to 11
NM RPS Active	9aa7ddf2-4ffc	W10027	EPENMAGG1S NM115S	EPENMAGG1S NM115S	Solar	5/1/2024	5/1/2024	5/31/2024	NM	N/A	14	10027-NM-05-2024-27647AB5-1 to 14
NM RPS Active	9aa7ddf2-4ffc	W10105	EPENMAGG1S NM116S	EPENMAGG1S NM116S	Solar	5/1/2024	5/1/2024	5/31/2024	NM	N/A	13	10105-NM-05-2024-BA7046ED-1 to 13
NM RPS Active	9aa7ddf2-4ffc	W10106	EPENMAGG1S NM117S	EPENMAGG1S NM117S	Solar	5/1/2024	5/1/2024	5/31/2024	NM	N/A	14	10106-NM-05-2024-6FBE15DB-1 to 14
NM RPS Active	9aa7ddf2-4ffc	W10107	EPENMAGG1S NM118S	EPENMAGG1S NM118S	Solar	5/1/2024	5/1/2024	5/31/2024	NM	N/A	22	10107-NM-05-2024-B85B489A-1 to 22
NM RPS Active	9aa7ddf2-4ffc	W10167	EPENMAGG1S NM119S	EPENMAGG1S NM119S	Solar	5/1/2024	5/1/2024	5/31/2024	NM	N/A	16	10167-NM-05-2024-F9D38A4B-1 to 16
NM RPS Active	9aa7ddf2-4ffc	W10460	EPENMAGG1S NM121S	EPENMAGG1S NM121S	Solar	5/1/2024	5/1/2024	5/31/2024	NM	N/A	16	10460-NM-05-2024-F3AEFF20-1 to 16
NM RPS Active	9aa7ddf2-4ffc	W10461	EPENMAGG1S NM122S	EPENMAGG1S NM122S	Solar	5/1/2024	5/1/2024	5/31/2024	NM	N/A	15	10461-NM-05-2024-5E654435-1 to 15
NM RPS Active	9aa7ddf2-4ffc	W10695	EPENMAGG1S NM124S	EPENMAGG1S NM124S	Solar	5/1/2024	5/1/2024	5/31/2024	NM	N/A	20	10695-NM-05-2024-C4ECFD1F-1 to 20
NM RPS Active	9aa7ddf2-4ffc	W10800	EPENMAGG1S NM125S	EPENMAGG1S NM125S	Solar	5/1/2024	5/1/2024	5/31/2024	NM	N/A	11	10800-NM-05-2024-F36A9784-1 to 11
NM RPS Active	9aa7ddf2-4ffc	W10820	EPENMAGG1S NM126S	EPENMAGG1S NM126S	Solar	5/1/2024	5/1/2024	5/31/2024	NM	N/A	16	10820-NM-05-2024-CF83662A-1 to 16
NM RPS Active	9aa7ddf2-4ffc	W10821	EPENMAGG1S NM127S	EPENMAGG1S NM127S	Solar	5/1/2024	5/1/2024	5/31/2024	NM	N/A	18	10821-NM-05-2024-2597FB8B-1 to 18
NM RPS Active	9aa7ddf2-4ffc	W10867	EPENMAGG1S NM128S	EPENMAGG1S NM128S	Solar	5/1/2024	5/1/2024	5/31/2024	NM	N/A	14	10867-NM-05-2024-C07E6D9E-1 to 14
NM RPS Active	9aa7ddf2-4ffc	W10868	EPENMAGG1S NM129S	EPENMAGG1S NM129S	Solar	5/1/2024	5/1/2024	5/31/2024	NM	N/A	15	10868-NM-05-2024-10499BBD-1 to 15
NM RPS Active	9aa7ddf2-4ffc	W10925	EPENMAGG1S NM131S	EPENMAGG1S NM131S	Solar	5/1/2024	5/1/2024	5/31/2024	NM	N/A	10	10925-NM-05-2024-D7D1EEFB-1 to 10
NM RPS Active	9aa7ddf2-4ffc	W10926	EPENMAGG1S NM132S	EPENMAGG1S NM132S	Solar	5/1/2024	5/1/2024	5/31/2024	NM	N/A	7	10926-NM-05-2024-C7DAFD5C-1 to 7
NM RPS Active	9aa7ddf2-4ffc	W11361	EPENMAGG1S NM133S	EPENMAGG1S NM133S	Solar	5/1/2024	5/1/2024	5/31/2024	NM	N/A	8	11361-NM-05-2024-81CA51F6-1 to 8
NM RPS Active	9aa7ddf2-4ffc	W11363	EPENMAGG1S NM135S	EPENMAGG1S NM135S	Solar	5/1/2024	5/1/2024	5/31/2024	NM	N/A	19	11363-NM-05-2024-427BAF2B-1 to 19
NM RPS Active	9aa7ddf2-4ffc	W11374	EPENMAGG1S NM136S	EPENMAGG1S NM136S	Solar	5/1/2024	5/1/2024	5/31/2024	NM	N/A	17	11374-NM-05-2024-6626EED2-1 to 17
NM RPS Active	9aa7ddf2-4ffc	W11375	EPENMAGG1S NM137S	EPENMAGG1S NM137S	Solar	5/1/2024	5/1/2024	5/31/2024	NM	N/A	17	11375-NM-05-2024-397C53DD-1 to 17
NM RPS Active	9aa7ddf2-4ffc	W11377	EPENMAGG1S NM138S	EPENMAGG1S NM138S	Solar	5/1/2024	5/1/2024	5/31/2024	NM	N/A	18	11377-NM-05-2024-26F92613-1 to 18
NM RPS Active	9aa7ddf2-4ffc	W11378	EPENMAGG1S NM139S	EPENMAGG1S NM139S	Solar	5/1/2024	5/1/2024	5/31/2024	NM	N/A	20	11378-NM-05-2024-85312C19-1 to 20
NM RPS Active	9aa7ddf2-4ffc	W11379	EPENMAGG1S NM140S	EPENMAGG1S NM140S	Solar	5/1/2024	5/1/2024	5/31/2024	NM	N/A	29	11379-NM-05-2024-7001BF8F-1 to 29
NM RPS Active	9aa7ddf2-4ffc	W11381	EPENMAGG1S NM141S	EPENMAGG1S NM141S	Solar	5/1/2024	5/1/2024	5/31/2024	NM	N/A	18	11381-NM-05-2024-80A77065-1 to 18
NM RPS Active	9aa7ddf2-4ffc	W11382	EPENMAGG1S NM142S	EPENMAGG1S NM142S	Solar	5/1/2024	5/1/2024	5/31/2024	NM	N/A	14	11382-NM-05-2024-C9B59CC5-1 to 14
NM RPS Active	9aa7ddf2-4ffc	W11383	EPENMAGG1S NM143S	EPENMAGG1S NM143S	Solar	5/1/2024	5/1/2024	5/31/2024	NM	N/A	23	11383-NM-05-2024-50E4A5DB-1 to 23
NM RPS Active	9aa7ddf2-4ffc	W11384	EPENMAGG1S NM144S	EPENMAGG1S NM144S	Solar	5/1/2024	5/1/2024	5/31/2024	NM	N/A	20	11384-NM-05-2024-BB4673A5-1 to 20
NM RPS Active	9aa7ddf2-4ffc	W11968	EPENMAGG1S NM145S	EPENMAGG1S NM145S	Solar	5/1/2024	5/1/2024	5/31/2024	NM	N/A	19	11968-NM-05-2024-BB1DE74B-1 to 19
NM RPS Active	9aa7ddf2-4ffc	W11969	EPENMAGG1S NM146S	EPENMAGG1S NM146S	Solar	5/1/2024	5/1/2024	5/31/2024	NM	N/A	12	11969-NM-05-2024-9E954009-1 to 12
NM RPS Active	9aa7ddf2-4ffc	W11970	EPENMAGG1S NM147S	EPENMAGG1S NM147S	Solar	5/1/2024	5/1/2024	5/31/2024	NM	N/A	19	11970-NM-05-2024-07218315-1 to 19
NM RPS Active	9aa7ddf2-4ffc	W11972	EPENMAGG1S NM149S	EPENMAGG1S NM149S	Solar	5/1/2024	5/1/2024	5/31/2024	NM	N/A	19	11972-NM-05-2024-BBD44518-1 to 19

Account	Account ID	WREGIS GU ID	Unit Name	Facility Name	Fuel Type	Vintage	Generation Start Date	Generation End Date	Generator Location	Eligility	Quantity (RECs)	Serial Numbers
NM RPS Active	9aa7ddf2-4ffc	W11973	EPENMAGG1S NM150S	EPENMAGG1S NM150S	Solar	5/1/2024	5/1/2024	5/31/2024	NM	N/A	20	11973-NM-05-2024-EE51FFB8-1 to 20
NM RPS Active	9aa7ddf2-4ffc	W11974	EPENMAGG1S NM151S	EPENMAGG1S NM151S	Solar	5/1/2024	5/1/2024	5/31/2024	NM	N/A	22	11974-NM-05-2024-2C56C813-1 to 22
NM RPS Active	9aa7ddf2-4ffc	W11975	EPENMAGG1S NM152S	EPENMAGG1S NM152S	Solar	5/1/2024	5/1/2024	5/31/2024	NM	N/A	12	11975-NM-05-2024-BF72E047-1 to 12
NM RPS Active	9aa7ddf2-4ffc	W11976	EPENMAGG1S NM153S	EPENMAGG1S NM153S	Solar	5/1/2024	5/1/2024	5/31/2024	NM	N/A	23	11976-NM-05-2024-B7481130-1 to 23
NM RPS Active	9aa7ddf2-4ffc	W11977	EPENMAGG1S NM154S	EPENMAGG1S NM154S	Solar	5/1/2024	5/1/2024	5/31/2024	NM	N/A	12	11977-NM-05-2024-CBDC8FCB-1 to 12
NM RPS Active	9aa7ddf2-4ffc	W11980	EPENMAGG1S NM156S	EPENMAGG1S NM156S	Solar	5/1/2024	5/1/2024	5/31/2024	NM	N/A	21	11980-NM-05-2024-0B753476-1 to 21
NM RPS Active	9aa7ddf2-4ffc	W11981	EPENMAGG1S NM157S	EPENMAGG1S NM157S	Solar	5/1/2024	5/1/2024	5/31/2024	NM	N/A	15	11981-NM-05-2024-6DB5E85E-1 to 15
NM RPS Active	9aa7ddf2-4ffc	W11982	EPENMAGG1S NM158S	EPENMAGG1S NM158S	Solar	5/1/2024	5/1/2024	5/31/2024	NM	N/A	14	11982-NM-05-2024-F0CC1DA2-1 to 14
NM RPS Active	9aa7ddf2-4ffc	W11984	EPENMAGG1S NM159S	EPENMAGG1S NM159S	Solar	5/1/2024	5/1/2024	5/31/2024	NM	N/A	18	11984-NM-05-2024-E792868E-1 to 18
NM RPS Active	9aa7ddf2-4ffc	W12098	EPENMAGG1S NM160S	EPENMAGG1S NM160S	Solar	5/1/2024	5/1/2024	5/31/2024	NM	N/A	18	12098-NM-05-2024-2C696690-1 to 18
NM RPS Active	9aa7ddf2-4ffc	W12099	EPENMAGG1S NM161S	EPENMAGG1S NM161S	Solar	5/1/2024	5/1/2024	5/31/2024	NM	N/A	20	12099-NM-05-2024-80731F61-1 to 20
NM RPS Active	9aa7ddf2-4ffc	W12100	EPENMAGG1S NM162S	EPENMAGG1S NM162S	Solar	5/1/2024	5/1/2024	5/31/2024	NM	N/A	21	12100-NM-05-2024-8F8A146C-1 to 21
NM RPS Active	9aa7ddf2-4ffc	W12101	EPENMAGG1S NM163S	EPENMAGG1S NM163S	Solar	5/1/2024	5/1/2024	5/31/2024	NM	N/A	16	12101-NM-05-2024-FB6E4822-1 to 16
NM RPS Active	9aa7ddf2-4ffc	W12188	EPENMAGG1S NM164S	EPENMAGG1S NM164S	Solar	5/1/2024	5/1/2024	5/31/2024	NM	N/A	15	12188-NM-05-2024-E73B33DE-1 to 15
NM RPS Active	9aa7ddf2-4ffc	W12257	EPENMAGG1S NM166S	EPENMAGG1S NM166S	Solar	5/1/2024	5/1/2024	5/31/2024	NM	N/A	3	12257-NM-05-2024-5457108C-1 to 3
NM RPS Active	9aa7ddf2-4ffc	W12260	EPENMAGG1S NM168S	EPENMAGG1S NM168S	Solar	5/1/2024	5/1/2024	5/31/2024	NM	N/A	18	12260-NM-05-2024-9941B9C5-1 to 18
NM RPS Active	9aa7ddf2-4ffc	W12643	EPENMAGG1S NM170S	EPENMAGG1S NM170S	Solar	5/1/2024	5/1/2024	5/31/2024	NM	N/A	14	12643-NM-05-2024-E5E87991-1 to 14
NM RPS Active	9aa7ddf2-4ffc	W12646	EPENMAGG1S NM173S	EPENMAGG1S NM173S	Solar	5/1/2024	5/1/2024	5/31/2024	NM	N/A	15	12646-NM-05-2024-89ADDF18-1 to 15
NM RPS Active	9aa7ddf2-4ffc	W12651	EPENMAGG1S NM176S	EPENMAGG1S NM176S	Solar	5/1/2024	5/1/2024	5/31/2024	NM	N/A	18	12651-NM-05-2024-CBCEEA46-1 to 18
NM RPS Active	9aa7ddf2-4ffc	W12702	EPENMAGG1S NM177S	EPENMAGG1S NM177S	Solar	5/1/2024	5/1/2024	5/31/2024	NM	N/A	11	12702-NM-05-2024-A8C4A7D3-1 to 11
NM RPS Active	9aa7ddf2-4ffc	W12703	EPENMAGG1S NM178S	EPENMAGG1S NM178S	Solar	5/1/2024	5/1/2024	5/31/2024	NM	N/A	22	12703-NM-05-2024-257A17C4-1 to 22
NM RPS Active	9aa7ddf2-4ffc	W12704	EPENMAGG1S NM179S	EPENMAGG1S NM179S	Solar	5/1/2024	5/1/2024	5/31/2024	NM	N/A	14	12704-NM-05-2024-9272E87E-1 to 14
NM RPS Active	9aa7ddf2-4ffc	W12744	EPENMAGG1S NM180S	EPENMAGG1S NM180S	Solar	5/1/2024	5/1/2024	5/31/2024	NM	N/A	20	12744-NM-05-2024-CDE53354-1 to 20
NM RPS Active	9aa7ddf2-4ffc	W12745	EPENMAGG1S NM181S	EPENMAGG1S NM181S	Solar	5/1/2024	5/1/2024	5/31/2024	NM	N/A	15	12745-NM-05-2024-5A5AE834-1 to 15
NM RPS Active	9aa7ddf2-4ffc	W13207	EPENMAGG1S NM182S	EPENMAGG1S NM182S	Solar	5/1/2024	5/1/2024	5/31/2024	NM	N/A	20	13207-NM-05-2024-98EFCBCD-1 to 20
NM RPS Active	9aa7ddf2-4ffc	W13208	EPENMAGG1S NM183S	EPENMAGG1S NM183S	Solar	5/1/2024	5/1/2024	5/31/2024	NM	N/A	28	13208-NM-05-2024-C92A5E6A-1 to 28
NM RPS Active	9aa7ddf2-4ffc	W13211	EPENMAGG1S NM185S	EPENMAGG1S NM185S	Solar	5/1/2024	5/1/2024	5/31/2024	NM	N/A	19	13211-NM-05-2024-EFB54DCD-1 to 19
NM RPS Active	9aa7ddf2-4ffc	W13615	EPENMAGG1S NM186S	EPENMAGG1S NM186S	Solar	5/1/2024	5/1/2024	5/31/2024	NM	N/A	23	13615-NM-05-2024-DBFC0FCD-1 to 23
NM RPS Active	9aa7ddf2-4ffc	W13616	EPENMAGG1S NM187S	EPENMAGG1S NM187S	Solar	5/1/2024	5/1/2024	5/31/2024	NM	N/A	18	13616-NM-05-2024-78AE0431-1 to 18
NM RPS Active	9aa7ddf2-4ffc	W13701	EPENMAGG1S NM188S	EPENMAGG1S NM188S	Solar	5/1/2024	5/1/2024	5/31/2024	NM	N/A	23	13701-NM-05-2024-851D438D-1 to 23
NM RPS Active	9aa7ddf2-4ffc	W13702	EPENMAGG1S NM189S	EPENMAGG1S NM189S	Solar	5/1/2024	5/1/2024	5/31/2024	NM	N/A	24	13702-NM-05-2024-4B5FF841-1 to 24
NM RPS Active	9aa7ddf2-4ffc	W13799	EPENMAGG1S NM190S	EPENMAGG1S NM190S	Solar	5/1/2024	5/1/2024	5/31/2024	NM	N/A	26	13799-NM-05-2024-D4715860-1 to 26
NM RPS Active	9aa7ddf2-4ffc	W13801	EPENMAGG1S NM191S	EPENMAGG1S NM191S	Solar	5/1/2024	5/1/2024	5/31/2024	NM	N/A	22	13801-NM-05-2024-E688FC5E-1 to 22
NM RPS Active	9aa7ddf2-4ffc	W13802	EPENMAGG1S NM192S	EPENMAGG1S NM192S	Solar	5/1/2024	5/1/2024	5/31/2024	NM	N/A	21	13802-NM-05-2024-4F2D01C9-1 to 21
NM RPS Active	9aa7ddf2-4ffc	W13803	EPENMAGG1S NM193S	EPENMAGG1S NM193S	Solar	5/1/2024	5/1/2024	5/31/2024	NM	N/A	25	13803-NM-05-2024-CACEDC14-1 to 25
NM RPS Active	9aa7ddf2-4ffc	W13804	EPENMAGG1S NM194S	EPENMAGG1S NM194S	Solar	5/1/2024	5/1/2024	5/31/2024	NM	N/A	20	13804-NM-05-2024-609A17C1-1 to 20
NM RPS Active	9aa7ddf2-4ffc	W13897	EPENMAGG1S NM195S	EPENMAGG1S NM195S	Solar	5/1/2024	5/1/2024	5/31/2024	NM	N/A	16	13897-NM-05-2024-806511C2-1 to 16
NM RPS Active	9aa7ddf2-4ffc	W13898	EPENMAGG1S NM196S	EPENMAGG1S NM196S	Solar	5/1/2024	5/1/2024	5/31/2024	NM	N/A	21	13898-NM-05-2024-725380EB-1 to 21
NM RPS Active	9aa7ddf2-4ffc	W13972	EPENMAGG1S NM197S	EPENMAGG1S NM197S	Solar	5/1/2024	5/1/2024	5/31/2024	NM	N/A	24	13972-NM-05-2024-75616FB7-1 to 24
NM RPS Active	9aa7ddf2-4ffc	W13973	EPENMAGG1S NM198S	EPENMAGG1S NM198S	Solar	5/1/2024	5/1/2024	5/31/2024	NM	N/A	16	13973-NM-05-2024-F3660176-1 to 16
NM RPS Active	9aa7ddf2-4ffc	W13975	EPENMAGG1S NM199S	EPENMAGG1S NM199S	Solar	5/1/2024	5/1/2024	5/31/2024	NM	N/A	24	13975-NM-05-2024-3F65F1C4-1 to 24
NM RPS Active	9aa7ddf2-4ffc	W14044	EPENMAGG1S NM200S	EPENMAGG1S NM200S	Solar	5/1/2024	5/1/2024	5/31/2024	NM	N/A	18	14044-NM-05-2024-958125B3-1 to 18
NM RPS Active	9aa7ddf2-4ffc	W14045	EPENMAGG1S NM201S	EPENMAGG1S NM201S	Solar	5/1/2024	5/1/2024	5/31/2024	NM	SMUD	16	14045-NM-05-2024-7585ADE4-1 to 16
NM RPS Active	9aa7ddf2-4ffc	W14046	EPENMAGG1S NM202S	EPENMAGG1S NM202S	Solar	5/1/2024	5/1/2024	5/31/2024	NM	N/A	15	14046-NM-05-2024-9AF63EC6-1 to 15
NM RPS Active	9aa7ddf2-4ffc	W14049	EPENMAGG1S NM204S	EPENMAGG1S NM204S	Solar	5/1/2024	5/1/2024	5/31/2024	NM	SMUD	27	14049-NM-05-2024-8EDA04D9-1 to 27
NM RPS Active	9aa7ddf2-4ffc	W14225	N/A	EPENMAGG1S NM205S	Solar	5/1/2024	5/1/2024	5/31/2024	NM	N/A	21	14225-NM-05-2024-F05D50A1-1 to 21
NM RPS Active	9aa7ddf2-4ffc	W14230	N/A	EPENMAGG1S NM206S	Solar	5/1/2024	5/1/2024	5/31/2024	NM	N/A	17	14230-NM-05-2024-8A5DAD0D-1 to 17
NM RPS Active	9aa7ddf2-4ffc	W14334	N/A	EPENMAGG1S NM207S	Solar	5/1/2024	5/1/2024	5/31/2024	NM	N/A	20	14334-NM-05-2024-0685629D-1 to 20
NM RPS Active	9aa7ddf2-4ffc	W15470	N/A	EPENMAGG1S NM208S	Solar	5/1/2024	5/1/2024	5/31/2024	NM	N/A	23	15470-NM-05-2024-B13DADDB-1 to 23
NM RPS Active	9aa7ddf2-4ffc	W15471	N/A	EPENMAGG1S NM209S	Solar	5/1/2024	5/1/2024	5/31/2024	NM	N/A	19	15471-NM-05-2024-6D96762D-1 to 19
NM RPS Active	9aa7ddf2-4ffc	W15472	N/A	EPENMAGG1S NM210S	Solar	5/1/2024	5/1/2024	5/31/2024	NM	N/A	16	15472-NM-05-2024-AED40746-1 to 16
NM RPS Active	9aa7ddf2-4ffc	W15473	N/A	EPENMAGG1S NM211S	Solar	5/1/2024	5/1/2024	5/31/2024	NM	N/A	24	15473-NM-05-2024-C5932134-1 to 24
NM RPS Active	9aa7ddf2-4ffc	W15474	N/A	EPENMAGG1S NM212S	Solar	5/1/2024	5/1/2024	5/31/2024	NM	N/A	15	15474-NM-05-2024-AFDD8AE0-1 to 15
NM RPS Active	9aa7ddf2-4ffc	W15475	N/A	EPENMAGG1S NM213S	Solar	5/1/2024	5/1/2024	5/31/2024	NM	N/A	23	15475-NM-05-2024-F0D684D7-1 to 23
NM RPS Active	9aa7ddf2-4ffc	W15517	N/A	EPENMAGG1S NM214S	Solar	5/1/2024	5/1/2024	5/31/2024	NM	N/A	20	15517-NM-05-2024-BB2B7145-1 to 20
NM RPS Active	9aa7ddf2-4ffc	W15518	N/A	EPENMAGG1S NM215S	Solar	5/1/2024	5/1/2024	5/31/2024	NM	N/A	20	15518-NM-05-2024-574ABA6B-1 to 20
NM RPS Active	9aa7ddf2-4ffc	W15519	N/A	EPENMAGG1S NM216S	Solar	5/1/2024	5/1/2024	5/31/2024	NM	N/A	25	15519-NM-05-2024-9DA47CB5-1 to 25
NM RPS Active	9aa7ddf2-4ffc	W15520	N/A	EPENMAGG1S NM217S	Solar	5/1/2024	5/1/2024	5/31/2024	NM	N/A	14	15520-NM-05-2024-3AD11F5A-1 to 14

Account	Account ID	WREGIS GU ID	Unit Name	Facility Name	Fuel Type	Vintage	Generation Start Date	Generation End Date	Generator Location	Eligility	Quantity (RECs)	Serial Numbers
NM RPS Active	9aa7ddf2-4ffc	W15521	N/A	EPENMAGG1S NM218S	Solar	5/1/2024	5/1/2024	5/31/2024	NM	N/A	15	15521-NM-05-2024-453158CF-1 to 15
NM RPS Active	9aa7ddf2-4ffc	W15533	N/A	EPENMAGG1S NM219S	Solar	5/1/2024	5/1/2024	5/31/2024	NM	N/A	14	15533-NM-05-2024-29034B77-1 to 14
NM RPS Active	9aa7ddf2-4ffc	W15702	N/A	EPENMAGG1S NM220S	Solar	5/1/2024	5/1/2024	5/31/2024	NM	N/A	16	15702-NM-05-2024-5D9EE11D-1 to 16
NM RPS Active	9aa7ddf2-4ffc	W15703	N/A	EPENMAGG1S NM221S	Solar	5/1/2024	5/1/2024	5/31/2024	NM	N/A	34	15703-NM-05-2024-4C8C4D29-1 to 34
NM RPS Active	9aa7ddf2-4ffc	W15704	N/A	EPENMAGG1S NM222S	Solar	5/1/2024	5/1/2024	5/31/2024	NM	N/A	27	15704-NM-05-2024-4C5D5285-1 to 27
NM RPS Active	9aa7ddf2-4ffc	W15705	N/A	EPENMAGG1S NM223S	Solar	5/1/2024	5/1/2024	5/31/2024	NM	N/A	23	15705-NM-05-2024-52C08451-1 to 23
NM RPS Active	9aa7ddf2-4ffc	W16065	N/A	EPENMAGG1S NM224S	Solar	5/1/2024	5/1/2024	5/31/2024	NM	N/A	20	16065-NM-05-2024-886AD6F3-1 to 20
NM RPS Active	9aa7ddf2-4ffc	W16066	N/A	EPENMAGG1S NM225S	Solar	5/1/2024	5/1/2024	5/31/2024	NM	N/A	20	16066-NM-05-2024-D33D091C-1 to 20
NM RPS Active	9aa7ddf2-4ffc	W16067	N/A	EPENMAGG1S NM226S	Solar	5/1/2024	5/1/2024	5/31/2024	NM	N/A	19	16067-NM-05-2024-4014EA08-1 to 19
NM RPS Active	9aa7ddf2-4ffc	W16490	N/A	EPENMAGG1S NM227S	Solar	5/1/2024	5/1/2024	5/31/2024	NM	N/A	21	16490-NM-05-2024-8AE11122-1 to 21
NM RPS Active	9aa7ddf2-4ffc	W16492	N/A	EPENMAGG1S NM229S	Solar	5/1/2024	5/1/2024	5/31/2024	NM	N/A	23	16492-NM-05-2024-0AA79806-1 to 23
NM RPS Active	9aa7ddf2-4ffc	W16493	N/A	EPENMAGG1S NM230S	Solar	5/1/2024	5/1/2024	5/31/2024	NM	N/A	21	16493-NM-05-2024-E68D7F8C-1 to 21
NM RPS Active	9aa7ddf2-4ffc	W16494	N/A	EPENMAGG1S NM231S	Solar	5/1/2024	5/1/2024	5/31/2024	NM	N/A	18	16494-NM-05-2024-BD210CB0-1 to 18
NM RPS Active	9aa7ddf2-4ffc	W17425	N/A	EPENMAGG1S NM232S	Solar	5/1/2024	5/1/2024	5/31/2024	NM	N/A	24	17425-NM-05-2024-C2DD7AEA-1 to 24
NM RPS Active	9aa7ddf2-4ffc	W17426	N/A	EPENMAGG1S NM233S	Solar	5/1/2024	5/1/2024	5/31/2024	NM	N/A	22	17426-NM-05-2024-AFF091F3-1 to 22
NM RPS Active	9aa7ddf2-4ffc	W17427	N/A	EPENMAGG1S NM235S	Solar	5/1/2024	5/1/2024	5/31/2024	NM	N/A	21	17427-NM-05-2024-8B2BF48F-1 to 21
NM RPS Active	9aa7ddf2-4ffc	W17428	N/A	EPENMAGG1S NM236S	Solar	5/1/2024	5/1/2024	5/31/2024	NM	N/A	20	17428-NM-05-2024-B975B211-1 to 20
NM RPS Active	9aa7ddf2-4ffc	W17429	N/A	EPENMAGG1S NM237S	Solar	5/1/2024	5/1/2024	5/31/2024	NM	N/A	26	17429-NM-05-2024-7CCC21BA-1 to 26
NM RPS Active	9aa7ddf2-4ffc	W17430	N/A	EPENMAGG1S NM238S	Solar	5/1/2024	5/1/2024	5/31/2024	NM	N/A	20	17430-NM-05-2024-64044C60-1 to 20
NM RPS Active	9aa7ddf2-4ffc	W17431	N/A	EPENMAGG1S NM239S	Solar	5/1/2024	5/1/2024	5/31/2024	NM	N/A	21	17431-NM-05-2024-877D3CFE-1 to 21
NM RPS Active	9aa7ddf2-4ffc	W17432	N/A	EPENMAGG1S NM240S	Solar	5/1/2024	5/1/2024	5/31/2024	NM	N/A	20	17432-NM-05-2024-B3ABB75C-1 to 20
NM RPS Active	9aa7ddf2-4ffc	W17433	N/A	EPENMAGG1S NM241S	Solar	5/1/2024	5/1/2024	5/31/2024	NM	N/A	19	17433-NM-05-2024-A596E01B-1 to 19
NM RPS Active	9aa7ddf2-4ffc	W17434	N/A	EPENMAGG1S NM242S	Solar	5/1/2024	5/1/2024	5/31/2024	NM	N/A	15	17434-NM-05-2024-F77DC632-1 to 15
NM RPS Active	9aa7ddf2-4ffc	W17435	N/A	EPENMAGG1S NM243S	Solar	5/1/2024	5/1/2024	5/31/2024	NM	N/A	19	17435-NM-05-2024-18A542F3-1 to 19
NM RPS Active	9aa7ddf2-4ffc	W17436	N/A	EPENMAGG1S NM244S	Solar	5/1/2024	5/1/2024	5/31/2024	NM	N/A	22	17436-NM-05-2024-E915ACFF-1 to 22
NM RPS Active	9aa7ddf2-4ffc	W17546	N/A	EPENMAGG1S NM245S	Solar	5/1/2024	5/1/2024	5/31/2024	NM	N/A	20	17546-NM-05-2024-38921D59-1 to 20
NM RPS Active	9aa7ddf2-4ffc	W17824	N/A	EPENMAGG1S NM246S	Solar	5/1/2024	5/1/2024	5/31/2024	NM	N/A	23	17824-NM-05-2024-94DF87ED-1 to 23
NM RPS Active	9aa7ddf2-4ffc	W17825	N/A	EPENMAGG1S NM247S	Solar	5/1/2024	5/1/2024	5/31/2024	NM	N/A	20	17825-NM-05-2024-54676EF9-1 to 20
NM RPS Active	9aa7ddf2-4ffc	W18165	N/A	EPENMAGG1S NM248S	Solar	5/1/2024	5/1/2024	5/31/2024	NM	N/A	24	18165-NM-05-2024-A261A64F-1 to 24
NM RPS Active	9aa7ddf2-4ffc	W18166	N/A	EPENMAGG1S NM249S	Solar	5/1/2024	5/1/2024	5/31/2024	NM	N/A	23	18166-NM-05-2024-33C0FF34-1 to 23
NM RPS Active	9aa7ddf2-4ffc	W18167	N/A	EPENMAGG1S NM250S	Solar	5/1/2024	5/1/2024	5/31/2024	NM	N/A	21	18167-NM-05-2024-AC06A691-1 to 21
NM RPS Active	9aa7ddf2-4ffc	W18279	N/A	EPENMAGG1S NM251S	Solar	5/1/2024	5/1/2024	5/31/2024	NM	N/A	15	18279-NM-05-2024-BC56E791-1 to 15
NM RPS Active	9aa7ddf2-4ffc	W18280	N/A	EPENMAGG1S NM252S	Solar	5/1/2024	5/1/2024	5/31/2024	NM	N/A	19	18280-NM-05-2024-3076C88E-1 to 19
NM RPS Active	9aa7ddf2-4ffc	W18547	N/A	EPENMAGG1S NM253S	Solar	5/1/2024	5/1/2024	5/31/2024	NM	N/A	11	18547-NM-05-2024-58B0E0BD-1 to 11
NM RPS Active	9aa7ddf2-4ffc	W18548	N/A	EPENMAGG1S NM254S	Solar	5/1/2024	5/1/2024	5/31/2024	NM	N/A	15	18548-NM-05-2024-503A94A0-1 to 15
NM RPS Active	9aa7ddf2-4ffc	W18750	N/A	EPENMAGG1S NM255S	Solar	5/1/2024	5/1/2024	5/31/2024	NM	N/A	3	18750-NM-05-2024-C9F318E8-1 to 3
NM RPS Active	9aa7ddf2-4ffc	W12647	EPE NM174S - City of Las Cruces - Water Treatment Facilities	EPE NM174S	Solar	6/1/2024	6/1/2024	6/30/2024	NM	N/A	18	12647-NM-06-2024-5CBCED8A-1 to 18
NM RPS Active	9aa7ddf2-4ffc	W12650	EPE NM175S - City of Las Cruces - Utilities - Waste Water	EPE NM175S	Solar	6/1/2024	6/1/2024	6/30/2024	NM	N/A	12	12650-NM-06-2024-43613D2C-1 to 12
NM RPS Active	9aa7ddf2-4ffc	W3622	EPENMAGG1S NM001S	EPENMAGG1S NM001S	Solar	6/1/2024	6/1/2024	6/30/2024	NM	N/A	6	3622-NM-06-2024-2FDF0918-1 to 6
NM RPS Active	9aa7ddf2-4ffc	W3624	EPENMAGG1S NM002S	EPENMAGG1S NM002S	Solar	6/1/2024	6/1/2024	6/30/2024	NM	N/A	7	3624-NM-06-2024-2A0B3E5B-1 to 7
NM RPS Active	9aa7ddf2-4ffc	W3637	EPENMAGG1S NM003S	EPENMAGG1S NM003S	Solar	6/1/2024	6/1/2024	6/30/2024	NM	N/A	7	3637-NM-06-2024-5AED817E-1 to 7
NM RPS Active	9aa7ddf2-4ffc	W3638	EPENMAGG1S NM004S	EPENMAGG1S NM004S	Solar	6/1/2024	6/1/2024	6/30/2024	NM	N/A	8	3638-NM-06-2024-2F8D4BF6-1 to 8
NM RPS Active	9aa7ddf2-4ffc	W3639	EPENMAGG1s NM005S	EPENMAGG1s NM005S	Solar	6/1/2024	6/1/2024	6/30/2024	NM	N/A	9	3639-NM-06-2024-02F24961-1 to 9
NM RPS Active	9aa7ddf2-4ffc	W3641	EPENMAGG1s NM007S	EPENMAGG1s NM007S	Solar	6/1/2024	6/1/2024	6/30/2024	NM	N/A	1	3641-NM-06-2024-3CD8524E-1 to 1
NM RPS Active	9aa7ddf2-4ffc	W3642	EPENMAGG1s NM008S	EPENMAGG1s NM008S	Solar	6/1/2024	6/1/2024	6/30/2024	NM	N/A	4	3642-NM-06-2024-DB681A8B-1 to 4
NM RPS Active	9aa7ddf2-4ffc	W3643	EPENMAGG1s NM009S	EPENMAGG1s NM009S	Solar	6/1/2024	6/1/2024	6/30/2024	NM	N/A	1	3643-NM-06-2024-0409AF07-1 to 1
NM RPS Active	9aa7ddf2-4ffc	W3644	EPENMAGG1S NM010S	EPENMAGG1S NM010S	Solar	6/1/2024	6/1/2024	6/30/2024	NM	N/A	3	3644-NM-06-2024-F8B91133-1 to 3
NM RPS Active	9aa7ddf2-4ffc	W3645	EPENMAGG1S NM011S	EPENMAGG1S NM011S	Solar	6/1/2024	6/1/2024	6/30/2024	NM	N/A	2	3645-NM-06-2024-E45CFD0F-1 to 2
NM RPS Active	9aa7ddf2-4ffc	W3646	EPENMAGG1S NM012S	EPENMAGG1S NM012S	Solar	6/1/2024	6/1/2024	6/30/2024	NM	N/A	2	3646-NM-06-2024-C8D025A9-1 to 2
NM RPS Active	9aa7ddf2-4ffc	W3647	EPENMAGG1S NM013S	EPENMAGG1S NM013S	Solar	6/1/2024	6/1/2024	6/30/2024	NM	N/A	4	3647-NM-06-2024-9EAD38FC-1 to 4
NM RPS Active	9aa7ddf2-4ffc	W3650	EPENMAGG1S NM016S	EPENMAGG1S NM016S	Solar	6/1/2024	6/1/2024	6/30/2024	NM	N/A	3	3650-NM-06-2024-1E24DBCD-1 to 3
NM RPS Active	9aa7ddf2-4ffc	W3651	EPENMAGG1S NM017S	EPENMAGG1S NM017S	Solar	6/1/2024	6/1/2024	6/30/2024	NM	N/A	2	3651-NM-06-2024-2D49C36E-1 to 2
NM RPS Active	9aa7ddf2-4ffc	W3652	EPENMAGG1S NM018S	EPENMAGG1S NM018S	Solar	6/1/2024	6/1/2024	6/30/2024	NM	N/A	8	3652-NM-06-2024-CD573872-1 to 8
NM RPS Active	9aa7ddf2-4ffc	W3653	EPENMAGG1S NM019S	EPENMAGG1S NM019S	Solar	6/1/2024	6/1/2024	6/30/2024	NM	N/A	3	3653-NM-06-2024-DEECE058-1 to 3

Account	Account ID	WREGIS GU ID	Unit Name	Facility Name	Fuel Type	Vintage	Generation Start Date	Generation End Date	Generator Location	Eligility	Quantity (RECs)	Serial Numbers
NM RPS Active	9aa7ddf2-4ffc	W3654	EPENMAGG1S NM020S	EPENMAGG1S NM020S	Solar	6/1/2024	6/1/2024	6/30/2024	NM	N/A	4	3654-NM-06-2024-D44BC92A-1 to 4
NM RPS Active	9aa7ddf2-4ffc	W3655	EPENMAGG1S NM021S	EPENMAGG1S NM021S	Solar	6/1/2024	6/1/2024	6/30/2024	NM	N/A	4	3655-NM-06-2024-BB6D5C42-1 to 4
NM RPS Active	9aa7ddf2-4ffc	W3656	EPENMAGG1S NM022S	EPENMAGG1S NM022S	Solar	6/1/2024	6/1/2024	6/30/2024	NM	N/A	4	3656-NM-06-2024-02AED97C-1 to 4
NM RPS Active	9aa7ddf2-4ffc	W3657	EPENMAGG1S NM023S	EPENMAGG1S NM023S	Solar	6/1/2024	6/1/2024	6/30/2024	NM	N/A	7	3657-NM-06-2024-56F0A815-1 to 7
NM RPS Active	9aa7ddf2-4ffc	W3658	EPENMAGG1S NM024S	EPENMAGG1S NM024S	Solar	6/1/2024	6/1/2024	6/30/2024	NM	N/A	5	3658-NM-06-2024-5ECB1114-1 to 5
NM RPS Active	9aa7ddf2-4ffc	W3659	EPENMAGG1S NM025S	EPENMAGG1S NM025S	Solar	6/1/2024	6/1/2024	6/30/2024	NM	N/A	1	3659-NM-06-2024-0A45373F-1 to 1
NM RPS Active	9aa7ddf2-4ffc	W3660	EPENMAGG1S NM026S	EPENMAGG1S NM026S	Solar	6/1/2024	6/1/2024	6/30/2024	NM	N/A	4	3660-NM-06-2024-4FCD8ED0-1 to 4
NM RPS Active	9aa7ddf2-4ffc	W3838	EPENMAGG1S NM027S	EPENMAGG1S NM027S	Solar	6/1/2024	6/1/2024	6/30/2024	NM	N/A	8	3838-NM-06-2024-903D0B3F-1 to 8
NM RPS Active	9aa7ddf2-4ffc	W3839	EPENMAGG1S NM028S	EPENMAGG1S NM028S	Solar	6/1/2024	6/1/2024	6/30/2024	NM	N/A	4	3839-NM-06-2024-74D39265-1 to 4
NM RPS Active	9aa7ddf2-4ffc	W3946	EPENMAGG1S NM029S	EPENMAGG1S NM029S	Solar	6/1/2024	6/1/2024	6/30/2024	NM	N/A	1	3946-NM-06-2024-2EA383CD-1 to 1
NM RPS Active	9aa7ddf2-4ffc	W3947	EPENMAGG1S NM030S	EPENMAGG1S NM030S	Solar	6/1/2024	6/1/2024	6/30/2024	NM	N/A	2	3947-NM-06-2024-D1B8A2E1-1 to 2
NM RPS Active	9aa7ddf2-4ffc	W3949	EPENMAGG1S NM032S	EPENMAGG1S NM032S	Solar	6/1/2024	6/1/2024	6/30/2024	NM	N/A	1	3949-NM-06-2024-E7D49DE8-1 to 1
NM RPS Active	9aa7ddf2-4ffc	W3950	EPENMAGG1S NM033S	EPENMAGG1S NM033S	Solar	6/1/2024	6/1/2024	6/30/2024	NM	N/A	2	3950-NM-06-2024-493EF069-1 to 2
NM RPS Active	9aa7ddf2-4ffc	W3951	EPENMAGG1S NM034S	EPENMAGG1S NM034S	Solar	6/1/2024	6/1/2024	6/30/2024	NM	N/A	1	3951-NM-06-2024-8A27E15A-1 to 1
NM RPS Active	9aa7ddf2-4ffc	W3952	EPENMAGG1S NM035S	EPENMAGG1S NM035S	Solar	6/1/2024	6/1/2024	6/30/2024	NM	N/A	8	3952-NM-06-2024-3CE7ED0D-1 to 8
NM RPS Active	9aa7ddf2-4ffc	W4101	EPENMAGG1S NM036S	EPENMAGG1S NM036S	Solar	6/1/2024	6/1/2024	6/30/2024	NM	N/A	3	4101-NM-06-2024-976C04FC-1 to 3
NM RPS Active	9aa7ddf2-4ffc	W4121	EPENMAGG1S NM037S	EPENMAGG1S NM037S	Solar	6/1/2024	6/1/2024	6/30/2024	NM	N/A	4	4121-NM-06-2024-A3F69AF8-1 to 4
NM RPS Active	9aa7ddf2-4ffc	W4221	EPENMAGG1S NM038S	EPENMAGG1S NM038S	Solar	6/1/2024	6/1/2024	6/30/2024	NM	N/A	7	4221-NM-06-2024-982CF977-1 to 7
NM RPS Active	9aa7ddf2-4ffc	W4270	EPENMAGG1S NM039S	EPENMAGG1S NM039S	Solar	6/1/2024	6/1/2024	6/30/2024	NM	N/A	4	4270-NM-06-2024-720F2D7D-1 to 4
NM RPS Active	9aa7ddf2-4ffc	W4341	EPENMAGG1S NM040S	EPENMAGG1S NM040S	Solar	6/1/2024	6/1/2024	6/30/2024	NM	N/A	1	4341-NM-06-2024-F93BE8AB-1 to 1
NM RPS Active	9aa7ddf2-4ffc	W4412	EPENMAGG1S NM041S	EPENMAGG1S NM041S	Solar	6/1/2024	6/1/2024	6/30/2024	NM	N/A	4	4412-NM-06-2024-B16526E0-1 to 4
NM RPS Active	9aa7ddf2-4ffc	W4437	EPENMAGG1S NM042S	EPENMAGG1S NM042S	Solar	6/1/2024	6/1/2024	6/30/2024	NM	N/A	5	4437-NM-06-2024-737891C9-1 to 5
NM RPS Active	9aa7ddf2-4ffc	W4459	EPENMAGG1S NM043S	EPENMAGG1S NM043S	Solar	6/1/2024	6/1/2024	6/30/2024	NM	N/A	8	4459-NM-06-2024-ADBC9E37-1 to 8
NM RPS Active	9aa7ddf2-4ffc	W4507	EPENMAGG1S NM044S	EPENMAGG1S NM044S	Solar	6/1/2024	6/1/2024	6/30/2024	NM	N/A	9	4507-NM-06-2024-DBC5F47C-1 to 9
NM RPS Active	9aa7ddf2-4ffc	W4649	EPENMAGG1S NM045S	EPENMAGG1S NM045S	Solar	6/1/2024	6/1/2024	6/30/2024	NM	N/A	2	4649-NM-06-2024-0DC22F8F-1 to 2
NM RPS Active	9aa7ddf2-4ffc	W4704	EPENMAGG1S NM046S	EPENMAGG1S NM046S	Solar	6/1/2024	6/1/2024	6/30/2024	NM	N/A	10	4704-NM-06-2024-1DA0D36E-1 to 10
NM RPS Active	9aa7ddf2-4ffc	W4732	EPENMAGG1S NM047S	EPENMAGG1S NM047S	Solar	6/1/2024	6/1/2024	6/30/2024	NM	N/A	3	4732-NM-06-2024-E4C3B2A2-1 to 3
NM RPS Active	9aa7ddf2-4ffc	W4806	EPENMAGG1S NM048S	EPENMAGG1S NM048S	Solar	6/1/2024	6/1/2024	6/30/2024	NM	N/A	6	4806-NM-06-2024-669082E4-1 to 6
NM RPS Active	9aa7ddf2-4ffc	W4833	EPENMAGG1S NM049S	EPENMAGG1S NM049S	Solar	6/1/2024	6/1/2024	6/30/2024	NM	N/A	4	4833-NM-06-2024-060CA72E-1 to 4
NM RPS Active	9aa7ddf2-4ffc	W4842	EPENMAGG1S NM050S	EPENMAGG1S NM050S	Solar	6/1/2024	6/1/2024	6/30/2024	NM	N/A	2	4842-NM-06-2024-2D0E4E3C-1 to 2
NM RPS Active	9aa7ddf2-4ffc	W4843	EPENMAGG1S NM051S	EPENMAGG1S NM051S	Solar	6/1/2024	6/1/2024	6/30/2024	NM	N/A	7	4843-NM-06-2024-7C1E9452-1 to 7
NM RPS Active	9aa7ddf2-4ffc	W4961	EPENMAGG1S NM052S	EPENMAGG1S NM052S	Solar	6/1/2024	6/1/2024	6/30/2024	NM	N/A	5	4961-NM-06-2024-1E13066A-1 to 5
NM RPS Active	9aa7ddf2-4ffc	W5022	EPENMAGG1S NM053S	EPENMAGG1S NM053S	Solar	6/1/2024	6/1/2024	6/30/2024	NM	N/A	6	5022-NM-06-2024-2C213B41-1 to 6
NM RPS Active	9aa7ddf2-4ffc	W5071	EPENMAGG1S NM054S	EPENMAGG1S NM054S	Solar	6/1/2024	6/1/2024	6/30/2024	NM	N/A	8	5071-NM-06-2024-C0D98279-1 to 8
NM RPS Active	9aa7ddf2-4ffc	W5080	EPENMAGG1S NM056S	EPENMAGG1S NM056S	Solar	6/1/2024	6/1/2024	6/30/2024	NM	N/A	3	5080-NM-06-2024-F81DB76C-1 to 3
NM RPS Active	9aa7ddf2-4ffc	W5111	EPENMAGG1S NM057S	EPENMAGG1S NM057S	Solar	6/1/2024	6/1/2024	6/30/2024	NM	N/A	5	5111-NM-06-2024-766527FA-1 to 5
NM RPS Active	9aa7ddf2-4ffc	W5112	EPENMAGG1S NM058S	EPENMAGG1S NM058S	Solar	6/1/2024	6/1/2024	6/30/2024	NM	N/A	7	5112-NM-06-2024-9F2E6B8F-1 to 7
NM RPS Active	9aa7ddf2-4ffc	W5280	EPENMAGG1S NM059S	EPENMAGG1S NM059S	Solar	6/1/2024	6/1/2024	6/30/2024	NM	N/A	5	5280-NM-06-2024-D39F64BE-1 to 5
NM RPS Active	9aa7ddf2-4ffc	W5318	EPENMAGG1S NM060S	EPENMAGG1S NM060S	Solar	6/1/2024	6/1/2024	6/30/2024	NM	SMUD	3	5318-NM-06-2024-AF8C03C7-1 to 3
NM RPS Active	9aa7ddf2-4ffc	W5320	EPENMAGG1S NM062S	EPENMAGG1S NM062S	Solar	6/1/2024	6/1/2024	6/30/2024	NM	N/A	4	5320-NM-06-2024-065F4A85-1 to 4
NM RPS Active	9aa7ddf2-4ffc	W5379	EPENMAGG1S NM063S	EPENMAGG1S NM063S	Solar	6/1/2024	6/1/2024	6/30/2024	NM	N/A	4	5379-NM-06-2024-53020E17-1 to 4
NM RPS Active	9aa7ddf2-4ffc	W5469	EPENMAGG1S NM064S	EPENMAGG1S NM064S	Solar	6/1/2024	6/1/2024	6/30/2024	NM	N/A	5	5469-NM-06-2024-1694D847-1 to 5
NM RPS Active	9aa7ddf2-4ffc	W5547	EPENMAGG1S NM065S	EPENMAGG1S NM065S	Solar	6/1/2024	6/1/2024	6/30/2024	NM	N/A	4	5547-NM-06-2024-F33572F5-1 to 4
NM RPS Active	9aa7ddf2-4ffc	W5553	EPENMAGG1S NM066S	EPENMAGG1S NM066S	Solar	6/1/2024	6/1/2024	6/30/2024	NM	N/A	2	5553-NM-06-2024-60ECC159-1 to 2
NM RPS Active	9aa7ddf2-4ffc	W5652	EPENMAGG1S NM067S	EPENMAGG1S NM067S	Solar	6/1/2024	6/1/2024	6/30/2024	NM	N/A	6	5652-NM-06-2024-ACD555C9-1 to 6
NM RPS Active	9aa7ddf2-4ffc	W5742	EPENMAGG1S NM070S	EPENMAGG1S NM070S	Solar	6/1/2024	6/1/2024	6/30/2024	NM	N/A	4	5742-NM-06-2024-0DC9A6B8-1 to 4
NM RPS Active	9aa7ddf2-4ffc	W5790	EPENMAGG1S NM071S	EPENMAGG1S NM071S	Solar	6/1/2024	6/1/2024	6/30/2024	NM	N/A	5	5790-NM-06-2024-25D38991-1 to 5
NM RPS Active	9aa7ddf2-4ffc	W5869	EPENMAGG1S NM073S	EPENMAGG1S NM073S	Solar	6/1/2024	6/1/2024	6/30/2024	NM	N/A	4	5869-NM-06-2024-AA4E60F1-1 to 4
NM RPS Active	9aa7ddf2-4ffc	W7116	EPENMAGG1S NM074S	EPENMAGG1S NM074S	Solar	6/1/2024	6/1/2024	6/30/2024	NM	N/A	3	7116-NM-06-2024-A1AC90F0-1 to 3
NM RPS Active	9aa7ddf2-4ffc	W7117	EPENMAGG1S NM075S	EPENMAGG1S NM075S	Solar	6/1/2024	6/1/2024	6/30/2024	NM	N/A	12	7117-NM-06-2024-30116304-1 to 12
NM RPS Active	9aa7ddf2-4ffc	W7118	EPENMAGG1S NM076S	EPENMAGG1S NM076S	Solar	6/1/2024	6/1/2024	6/30/2024	NM	N/A	4	7118-NM-06-2024-BBB69830-1 to 4
NM RPS Active	9aa7ddf2-4ffc	W7119	EPENMAGG1S NM077S	EPENMAGG1S NM077S	Solar	6/1/2024	6/1/2024	6/30/2024	NM	N/A	11	7119-NM-06-2024-A8E264BB-1 to 11
NM RPS Active	9aa7ddf2-4ffc	W7120	EPENMAGG1S NM078S	EPENMAGG1S NM078S	Solar	6/1/2024	6/1/2024	6/30/2024	NM	N/A	6	7120-NM-06-2024-0EEB7204-1 to 6
NM RPS Active	9aa7ddf2-4ffc	W7121	EPENMAGG1S NM079S	EPENMAGG1S NM079S	Solar	6/1/2024	6/1/2024	6/30/2024	NM	N/A	5	7121-NM-06-2024-D5EE3138-1 to 5
NM RPS Active	9aa7ddf2-4ffc	W7324	EPENMAGG1S NM080S	EPENMAGG1S NM080S	Solar	6/1/2024	6/1/2024	6/30/2024	NM	N/A	11	7324-NM-06-2024-D2B04194-1 to 11
NM RPS Active	9aa7ddf2-4ffc	W7325	EPENMAGG1S NM081S	EPENMAGG1S NM081S	Solar	6/1/2024	6/1/2024	6/30/2024	NM	N/A	7	7325-NM-06-2024-E9A324D2-1 to 7
NM RPS Active	9aa7ddf2-4ffc	W7332	EPENMAGG1S NM082S	EPENMAGG1S NM082S	Solar	6/1/2024	6/1/2024	6/30/2024	NM	N/A	6	7332-NM-06-2024-32B000D0-1 to 6
NM RPS Active	9aa7ddf2-4ffc	W7333	EPENMAGG1S NM083S	EPENMAGG1S NM083S	Solar	6/1/2024	6/1/2024	6/30/2024	NM	N/A	6	7333-NM-06-2024-5D1B9D5F-1 to 6

Account	Account ID	WREGIS GU ID	Unit Name	Facility Name	Fuel Type	Vintage	Generation Start Date	Generation End Date	Generator Location	Eligility	Quantity (RECs)	Serial Numbers
NM RPS Active	9aa7ddf2-4ffc	W7424	EPENMAGG1S NM084S	EPENMAGG1S NM084S	Solar	6/1/2024	6/1/2024	6/30/2024	NM	N/A	6	7424-NM-06-2024-88647254-1 to 6
NM RPS Active	9aa7ddf2-4ffc	W7425	EPENMAGG1S NM085S	EPENMAGG1S NM085S	Solar	6/1/2024	6/1/2024	6/30/2024	NM	N/A	7	7425-NM-06-2024-EA4AB43D-1 to 7
NM RPS Active	9aa7ddf2-4ffc	W7547	EPENMAGG1S NM086S	EPENMAGG1S NM086S	Solar	6/1/2024	6/1/2024	6/30/2024	NM	N/A	6	7547-NM-06-2024-D552BA3B-1 to 6
NM RPS Active	9aa7ddf2-4ffc	W7554	EPENMAGG1S NM087S	EPENMAGG1S NM087S	Solar	6/1/2024	6/1/2024	6/30/2024	NM	N/A	5	7554-NM-06-2024-9E8C3F5D-1 to 5
NM RPS Active	9aa7ddf2-4ffc	W7555	EPENMAGG1S NM088S	EPENMAGG1S NM088S	Solar	6/1/2024	6/1/2024	6/30/2024	NM	N/A	5	7555-NM-06-2024-CE19EA72-1 to 5
NM RPS Active	9aa7ddf2-4ffc	W7556	EPENMAGG1S NM089S	EPENMAGG1S NM089S	Solar	6/1/2024	6/1/2024	6/30/2024	NM	N/A	2	7556-NM-06-2024-D2E9EB6E-1 to 2
NM RPS Active	9aa7ddf2-4ffc	W7557	EPENMAGG1S NM090S	EPENMAGG1S NM090S	Solar	6/1/2024	6/1/2024	6/30/2024	NM	N/A	4	7557-NM-06-2024-FBD1C8CB-1 to 4
NM RPS Active	9aa7ddf2-4ffc	W7558	EPENMAGG1S NM091S	EPENMAGG1S NM091S	Solar	6/1/2024	6/1/2024	6/30/2024	NM	N/A	8	7558-NM-06-2024-AAFD4A77-1 to 8
NM RPS Active	9aa7ddf2-4ffc	W7559	EPENMAGG1S NM092S	EPENMAGG1S NM092S	Solar	6/1/2024	6/1/2024	6/30/2024	NM	N/A	7	7559-NM-06-2024-1331E378-1 to 7
NM RPS Active	9aa7ddf2-4ffc	W7561	EPENMAGG1S NM093S	EPENMAGG1S NM093S	Solar	6/1/2024	6/1/2024	6/30/2024	NM	N/A	2	7561-NM-06-2024-7B0F25A0-1 to 2
NM RPS Active	9aa7ddf2-4ffc	W7671	EPENMAGG1S NM094S	EPENMAGG1S NM094S	Solar	6/1/2024	6/1/2024	6/30/2024	NM	N/A	8	7671-NM-06-2024-4EB9D4B9-1 to 8
NM RPS Active	9aa7ddf2-4ffc	W7672	EPENMAGG1S NM095S	EPENMAGG1S NM095S	Solar	6/1/2024	6/1/2024	6/30/2024	NM	N/A	2	7672-NM-06-2024-F28B858F-1 to 2
NM RPS Active	9aa7ddf2-4ffc	W7673	EPENMAGG1S NM096S	EPENMAGG1S NM096S	Solar	6/1/2024	6/1/2024	6/30/2024	NM	N/A	5	7673-NM-06-2024-9650114F-1 to 5
NM RPS Active	9aa7ddf2-4ffc	W7674	EPENMAGG1S NM097S	EPENMAGG1S NM097S	Solar	6/1/2024	6/1/2024	6/30/2024	NM	N/A	3	7674-NM-06-2024-61538871-1 to 3
NM RPS Active	9aa7ddf2-4ffc	W7699	EPENMAGG1S NM098S	EPENMAGG1S NM098S	Solar	6/1/2024	6/1/2024	6/30/2024	NM	N/A	6	7699-NM-06-2024-4C85D2EF-1 to 6
NM RPS Active	9aa7ddf2-4ffc	W7700	EPENMAGG1S NM099S	EPENMAGG1S NM099S	Solar	6/1/2024	6/1/2024	6/30/2024	NM	N/A	3	7700-NM-06-2024-18FB8E8C-1 to 3
NM RPS Active	9aa7ddf2-4ffc	W8123	EPENMAGG1S NM100S	EPENMAGG1S NM100S	Solar	6/1/2024	6/1/2024	6/30/2024	NM	N/A	1	8123-NM-06-2024-06A6804B-1 to 1
NM RPS Active	9aa7ddf2-4ffc	W8124	EPENMAGG1S NM101S	EPENMAGG1S NM101S	Solar	6/1/2024	6/1/2024	6/30/2024	NM	N/A	11	8124-NM-06-2024-7D619C76-1 to 11
NM RPS Active	9aa7ddf2-4ffc	W8197	EPENMAGG1S NM102S	EPENMAGG1S NM102S	Solar	6/1/2024	6/1/2024	6/30/2024	NM	N/A	5	8197-NM-06-2024-8DCCAC87-1 to 5
NM RPS Active	9aa7ddf2-4ffc	W8198	EPENMAGG1S NM103S	EPENMAGG1S NM103S	Solar	6/1/2024	6/1/2024	6/30/2024	NM	N/A	4	8198-NM-06-2024-CB677043-1 to 4
NM RPS Active	9aa7ddf2-4ffc	W8794	EPENMAGG1S NM104S	EPENMAGG1S NM104S	Solar	6/1/2024	6/1/2024	6/30/2024	NM	N/A	5	8794-NM-06-2024-77A8B1C6-1 to 5
NM RPS Active	9aa7ddf2-4ffc	W8835	EPENMAGG1S NM105S	EPENMAGG1S NM105S	Solar	6/1/2024	6/1/2024	6/30/2024	NM	N/A	5	8835-NM-06-2024-C8AC917D-1 to 5
NM RPS Active	9aa7ddf2-4ffc	W8836	EPENMAGG1S NM106S	EPENMAGG1S NM106S	Solar	6/1/2024	6/1/2024	6/30/2024	NM	N/A	6	8836-NM-06-2024-046D2F34-1 to 6
NM RPS Active	9aa7ddf2-4ffc	W9324	EPENMAGG1S NM107S	EPENMAGG1S NM107S	Solar	6/1/2024	6/1/2024	6/30/2024	NM	N/A	4	9324-NM-06-2024-896AA34A-1 to 4
NM RPS Active	9aa7ddf2-4ffc	W9325	EPENMAGG1S NM108S	EPENMAGG1S NM108S	Solar	6/1/2024	6/1/2024	6/30/2024	NM	N/A	5	9325-NM-06-2024-F81A43B0-1 to 5
NM RPS Active	9aa7ddf2-4ffc	W9344	EPENMAGG1S NM109S	EPENMAGG1S NM109S	Solar	6/1/2024	6/1/2024	6/30/2024	NM	N/A	2	9344-NM-06-2024-FEC32D56-1 to 2
NM RPS Active	9aa7ddf2-4ffc	W9345	EPENMAGG1S NM110S	EPENMAGG1S NM110S	Solar	6/1/2024	6/1/2024	6/30/2024	NM	N/A	7	9345-NM-06-2024-C6293D64-1 to 7
NM RPS Active	9aa7ddf2-4ffc	W9602	EPENMAGG1S NM111S	EPENMAGG1S NM111S	Solar	6/1/2024	6/1/2024	6/30/2024	NM	N/A	13	9602-NM-06-2024-B3CD3D0D-1 to 13
NM RPS Active	9aa7ddf2-4ffc	W9603	EPENMAGG1S NM112S	EPENMAGG1S NM112S	Solar	6/1/2024	6/1/2024	6/30/2024	NM	N/A	4	9603-NM-06-2024-4B93D890-1 to 4
NM RPS Active	9aa7ddf2-4ffc	W10025	EPENMAGG1S NM113S	EPENMAGG1S NM113S	Solar	6/1/2024	6/1/2024	6/30/2024	NM	N/A	5	10025-NM-06-2024-29AA9851-1 to 5
NM RPS Active	9aa7ddf2-4ffc	W10026	EPENMAGG1S NM114S	EPENMAGG1S NM114S	Solar	6/1/2024	6/1/2024	6/30/2024	NM	N/A	3	10026-NM-06-2024-9FDE580C-1 to 3
NM RPS Active	9aa7ddf2-4ffc	W10027	EPENMAGG1S NM115S	EPENMAGG1S NM115S	Solar	6/1/2024	6/1/2024	6/30/2024	NM	N/A	3	10027-NM-06-2024-3F2B1718-1 to 3
NM RPS Active	9aa7ddf2-4ffc	W10105	EPENMAGG1S NM116S	EPENMAGG1S NM116S	Solar	6/1/2024	6/1/2024	6/30/2024	NM	N/A	4	10105-NM-06-2024-A140DE85-1 to 4
NM RPS Active	9aa7ddf2-4ffc	W10106	EPENMAGG1S NM117S	EPENMAGG1S NM117S	Solar	6/1/2024	6/1/2024	6/30/2024	NM	N/A	3	10106-NM-06-2024-D0941B3E-1 to 3
NM RPS Active	9aa7ddf2-4ffc	W10107	EPENMAGG1S NM118S	EPENMAGG1S NM118S	Solar	6/1/2024	6/1/2024	6/30/2024	NM	N/A	5	10107-NM-06-2024-FC44A78B-1 to 5
NM RPS Active	9aa7ddf2-4ffc	W10167	EPENMAGG1S NM119S	EPENMAGG1S NM119S	Solar	6/1/2024	6/1/2024	6/30/2024	NM	N/A	6	10167-NM-06-2024-853DB0D4-1 to 6
NM RPS Active	9aa7ddf2-4ffc	W10460	EPENMAGG1S NM121S	EPENMAGG1S NM121S	Solar	6/1/2024	6/1/2024	6/30/2024	NM	N/A	5	10460-NM-06-2024-BAC9ADA5-1 to 5
NM RPS Active	9aa7ddf2-4ffc	W10461	EPENMAGG1S NM122S	EPENMAGG1S NM122S	Solar	6/1/2024	6/1/2024	6/30/2024	NM	N/A	6	10461-NM-06-2024-B798282A-1 to 6
NM RPS Active	9aa7ddf2-4ffc	W10695	EPENMAGG1S NM124S	EPENMAGG1S NM124S	Solar	6/1/2024	6/1/2024	6/30/2024	NM	N/A	4	10695-NM-06-2024-FCBA352F-1 to 4
NM RPS Active	9aa7ddf2-4ffc	W10800	EPENMAGG1S NM125S	EPENMAGG1S NM125S	Solar	6/1/2024	6/1/2024	6/30/2024	NM	N/A	8	10800-NM-06-2024-0A4CDF47-1 to 8
NM RPS Active	9aa7ddf2-4ffc	W10820	EPENMAGG1S NM126S	EPENMAGG1S NM126S	Solar	6/1/2024	6/1/2024	6/30/2024	NM	N/A	4	10820-NM-06-2024-1DA0ED2E-1 to 4
NM RPS Active	9aa7ddf2-4ffc	W10821	EPENMAGG1S NM127S	EPENMAGG1S NM127S	Solar	6/1/2024	6/1/2024	6/30/2024	NM	N/A	7	10821-NM-06-2024-5D15308C-1 to 7
NM RPS Active	9aa7ddf2-4ffc	W10867	EPENMAGG1S NM128S	EPENMAGG1S NM128S	Solar	6/1/2024	6/1/2024	6/30/2024	NM	N/A	4	10867-NM-06-2024-672DF1BA-1 to 4
NM RPS Active	9aa7ddf2-4ffc	W10868	EPENMAGG1S NM129S	EPENMAGG1S NM129S	Solar	6/1/2024	6/1/2024	6/30/2024	NM	N/A	5	10868-NM-06-2024-ADA0DC33-1 to 5
NM RPS Active	9aa7ddf2-4ffc	W10925	EPENMAGG1S NM131S	EPENMAGG1S NM131S	Solar	6/1/2024	6/1/2024	6/30/2024	NM	N/A	4	10925-NM-06-2024-62FC3713-1 to 4
NM RPS Active	9aa7ddf2-4ffc	W10926	EPENMAGG1S NM132S	EPENMAGG1S NM132S	Solar	6/1/2024	6/1/2024	6/30/2024	NM	N/A	1	10926-NM-06-2024-1ED01772-1 to 1
NM RPS Active	9aa7ddf2-4ffc	W11361	EPENMAGG1S NM133S	EPENMAGG1S NM133S	Solar	6/1/2024	6/1/2024	6/30/2024	NM	N/A	2	11361-NM-06-2024-311F72CB-1 to 2
NM RPS Active	9aa7ddf2-4ffc	W11363	EPENMAGG1S NM135S	EPENMAGG1S NM135S	Solar	6/1/2024	6/1/2024	6/30/2024	NM	N/A	9	11363-NM-06-2024-67B63B46-1 to 9
NM RPS Active	9aa7ddf2-4ffc	W11374	EPENMAGG1S NM136S	EPENMAGG1S NM136S	Solar	6/1/2024	6/1/2024	6/30/2024	NM	N/A	4	11374-NM-06-2024-41980EC5-1 to 4
NM RPS Active	9aa7ddf2-4ffc	W11375	EPENMAGG1S NM137S	EPENMAGG1S NM137S	Solar	6/1/2024	6/1/2024	6/30/2024	NM	N/A	8	11375-NM-06-2024-C6BD167B-1 to 8
NM RPS Active	9aa7ddf2-4ffc	W11377	EPENMAGG1S NM138S	EPENMAGG1S NM138S	Solar	6/1/2024	6/1/2024	6/30/2024	NM	N/A	4	11377-NM-06-2024-8E2B716E-1 to 4
NM RPS Active	9aa7ddf2-4ffc	W11378	EPENMAGG1S NM139S	EPENMAGG1S NM139S	Solar	6/1/2024	6/1/2024	6/30/2024	NM	N/A	6	11378-NM-06-2024-379C88BD-1 to 6
NM RPS Active	9aa7ddf2-4ffc	W11379	EPENMAGG1S NM140S	EPENMAGG1S NM140S	Solar	6/1/2024	6/1/2024	6/30/2024	NM	N/A	9	11379-NM-06-2024-CB37E4AA-1 to 9
NM RPS Active	9aa7ddf2-4ffc	W11381	EPENMAGG1S NM141S	EPENMAGG1S NM141S	Solar	6/1/2024	6/1/2024	6/30/2024	NM	N/A	5	11381-NM-06-2024-846CAA3E-1 to 5
NM RPS Active	9aa7ddf2-4ffc	W11382	EPENMAGG1S NM142S	EPENMAGG1S NM142S	Solar	6/1/2024	6/1/2024	6/30/2024	NM	N/A	6	11382-NM-06-2024-A220AD8F-1 to 6
NM RPS Active	9aa7ddf2-4ffc	W11383	EPENMAGG1S NM143S	EPENMAGG1S NM143S	Solar	6/1/2024	6/1/2024	6/30/2024	NM	N/A	6	11383-NM-06-2024-BC08D9C4-1 to 6
NM RPS Active	9aa7ddf2-4ffc	W11384	EPENMAGG1S NM144S	EPENMAGG1S NM144S	Solar	6/1/2024	6/1/2024	6/30/2024	NM	N/A	6	11384-NM-06-2024-3979C25D-1 to 6
NM RPS Active	9aa7ddf2-4ffc	W11968	EPENMAGG1S NM145S	EPENMAGG1S NM145S	Solar	6/1/2024	6/1/2024	6/30/2024	NM	N/A	5	11968-NM-06-2024-F2FD2A79-1 to 5

Account	Account ID	WREGIS GU ID	Unit Name	Facility Name	Fuel Type	Vintage	Generation Start Date	Generation End Date	Generator Location	Eligility	Quantity (RECs)	Serial Numbers
NM RPS Active	9aa7ddf2-4ffc	W11969	EPENMAGG1S NM146S	EPENMAGG1S NM146S	Solar	6/1/2024	6/1/2024	6/30/2024	NM	N/A	4	11969-NM-06-2024-48BF7269-1 to 4
NM RPS Active	9aa7ddf2-4ffc	W11970	EPENMAGG1S NM147S	EPENMAGG1S NM147S	Solar	6/1/2024	6/1/2024	6/30/2024	NM	N/A	8	11970-NM-06-2024-CBDBF541-1 to 8
NM RPS Active	9aa7ddf2-4ffc	W11972	EPENMAGG1S NM149S	EPENMAGG1S NM149S	Solar	6/1/2024	6/1/2024	6/30/2024	NM	N/A	11	11972-NM-06-2024-0FEAC74B-1 to 11
NM RPS Active	9aa7ddf2-4ffc	W11973	EPENMAGG1S NM150S	EPENMAGG1S NM150S	Solar	6/1/2024	6/1/2024	6/30/2024	NM	N/A	10	11973-NM-06-2024-2B7E28BD-1 to 10
NM RPS Active	9aa7ddf2-4ffc	W11974	EPENMAGG1S NM151S	EPENMAGG1S NM151S	Solar	6/1/2024	6/1/2024	6/30/2024	NM	N/A	8	11974-NM-06-2024-C98FC2A8-1 to 8
NM RPS Active	9aa7ddf2-4ffc	W11975	EPENMAGG1S NM152S	EPENMAGG1S NM152S	Solar	6/1/2024	6/1/2024	6/30/2024	NM	N/A	11	11975-NM-06-2024-AB1EEF98-1 to 11
NM RPS Active	9aa7ddf2-4ffc	W11976	EPENMAGG1S NM153S	EPENMAGG1S NM153S	Solar	6/1/2024	6/1/2024	6/30/2024	NM	N/A	10	11976-NM-06-2024-725E25EF-1 to 10
NM RPS Active	9aa7ddf2-4ffc	W11977	EPENMAGG1S NM154S	EPENMAGG1S NM154S	Solar	6/1/2024	6/1/2024	6/30/2024	NM	N/A	5	11977-NM-06-2024-30701233-1 to 5
NM RPS Active	9aa7ddf2-4ffc	W11980	EPENMAGG1S NM156S	EPENMAGG1S NM156S	Solar	6/1/2024	6/1/2024	6/30/2024	NM	N/A	12	11980-NM-06-2024-8BCA64D0-1 to 12
NM RPS Active	9aa7ddf2-4ffc	W11981	EPENMAGG1S NM157S	EPENMAGG1S NM157S	Solar	6/1/2024	6/1/2024	6/30/2024	NM	N/A	9	11981-NM-06-2024-C26EF671-1 to 9
NM RPS Active	9aa7ddf2-4ffc	W11982	EPENMAGG1S NM158S	EPENMAGG1S NM158S	Solar	6/1/2024	6/1/2024	6/30/2024	NM	N/A	11	11982-NM-06-2024-97976852-1 to 11
NM RPS Active	9aa7ddf2-4ffc	W11984	EPENMAGG1S NM159S	EPENMAGG1S NM159S	Solar	6/1/2024	6/1/2024	6/30/2024	NM	N/A	4	11984-NM-06-2024-0665B5C9-1 to 4
NM RPS Active	9aa7ddf2-4ffc	W12098	EPENMAGG1S NM160S	EPENMAGG1S NM160S	Solar	6/1/2024	6/1/2024	6/30/2024	NM	N/A	6	12098-NM-06-2024-3A6519AD-1 to 6
NM RPS Active	9aa7ddf2-4ffc	W12099	EPENMAGG1S NM161S	EPENMAGG1S NM161S	Solar	6/1/2024	6/1/2024	6/30/2024	NM	N/A	6	12099-NM-06-2024-EAD1BE38-1 to 6
NM RPS Active	9aa7ddf2-4ffc	W12100	EPENMAGG1S NM162S	EPENMAGG1S NM162S	Solar	6/1/2024	6/1/2024	6/30/2024	NM	N/A	9	12100-NM-06-2024-B236DBDC-1 to 9
NM RPS Active	9aa7ddf2-4ffc	W12101	EPENMAGG1S NM163S	EPENMAGG1S NM163S	Solar	6/1/2024	6/1/2024	6/30/2024	NM	N/A	5	12101-NM-06-2024-DFDE93AA-1 to 5
NM RPS Active	9aa7ddf2-4ffc	W12188	EPENMAGG1S NM164S	EPENMAGG1S NM164S	Solar	6/1/2024	6/1/2024	6/30/2024	NM	N/A	4	12188-NM-06-2024-0950C965-1 to 4
NM RPS Active	9aa7ddf2-4ffc	W12257	EPENMAGG1S NM166S	EPENMAGG1S NM166S	Solar	6/1/2024	6/1/2024	6/30/2024	NM	N/A	1	12257-NM-06-2024-0FC0E76A-1 to 1
NM RPS Active	9aa7ddf2-4ffc	W12260	EPENMAGG1S NM168S	EPENMAGG1S NM168S	Solar	6/1/2024	6/1/2024	6/30/2024	NM	N/A	6	12260-NM-06-2024-D426C872-1 to 6
NM RPS Active	9aa7ddf2-4ffc	W12643	EPENMAGG1S NM170S	EPENMAGG1S NM170S	Solar	6/1/2024	6/1/2024	6/30/2024	NM	N/A	4	12643-NM-06-2024-A2B58C0B-1 to 4
NM RPS Active	9aa7ddf2-4ffc	W12646	EPENMAGG1S NM173S	EPENMAGG1S NM173S	Solar	6/1/2024	6/1/2024	6/30/2024	NM	N/A	8	12646-NM-06-2024-116CE6B7-1 to 8
NM RPS Active	9aa7ddf2-4ffc	W12651	EPENMAGG1S NM176S	EPENMAGG1S NM176S	Solar	6/1/2024	6/1/2024	6/30/2024	NM	N/A	5	12651-NM-06-2024-FA331F51-1 to 5
NM RPS Active	9aa7ddf2-4ffc	W12702	EPENMAGG1S NM177S	EPENMAGG1S NM177S	Solar	6/1/2024	6/1/2024	6/30/2024	NM	N/A	9	12702-NM-06-2024-F508ADAD-1 to 9
NM RPS Active	9aa7ddf2-4ffc	W12703	EPENMAGG1S NM178S	EPENMAGG1S NM178S	Solar	6/1/2024	6/1/2024	6/30/2024	NM	N/A	11	12703-NM-06-2024-4A138589-1 to 11
NM RPS Active	9aa7ddf2-4ffc	W12704	EPENMAGG1S NM179S	EPENMAGG1S NM179S	Solar	6/1/2024	6/1/2024	6/30/2024	NM	N/A	7	12704-NM-06-2024-B6B7B2CC-1 to 7
NM RPS Active	9aa7ddf2-4ffc	W12744	EPENMAGG1S NM180S	EPENMAGG1S NM180S	Solar	6/1/2024	6/1/2024	6/30/2024	NM	N/A	10	12744-NM-06-2024-AC4C94A7-1 to 10
NM RPS Active	9aa7ddf2-4ffc	W12745	EPENMAGG1S NM181S	EPENMAGG1S NM181S	Solar	6/1/2024	6/1/2024	6/30/2024	NM	N/A	6	12745-NM-06-2024-0E04CED2-1 to 6
NM RPS Active	9aa7ddf2-4ffc	W13207	EPENMAGG1S NM182S	EPENMAGG1S NM182S	Solar	6/1/2024	6/1/2024	6/30/2024	NM	N/A	6	13207-NM-06-2024-74389A71-1 to 6
NM RPS Active	9aa7ddf2-4ffc	W13208	EPENMAGG1S NM183S	EPENMAGG1S NM183S	Solar	6/1/2024	6/1/2024	6/30/2024	NM	N/A	7	13208-NM-06-2024-958C8DAB-1 to 7
NM RPS Active	9aa7ddf2-4ffc	W13211	EPENMAGG1S NM185S	EPENMAGG1S NM185S	Solar	6/1/2024	6/1/2024	6/30/2024	NM	N/A	6	13211-NM-06-2024-7C887AE1-1 to 6
NM RPS Active	9aa7ddf2-4ffc	W13615	EPENMAGG1S NM186S	EPENMAGG1S NM186S	Solar	6/1/2024	6/1/2024	6/30/2024	NM	N/A	10	13615-NM-06-2024-95F988FD-1 to 10
NM RPS Active	9aa7ddf2-4ffc	W13616	EPENMAGG1S NM187S	EPENMAGG1S NM187S	Solar	6/1/2024	6/1/2024	6/30/2024	NM	N/A	8	13616-NM-06-2024-C4D11CB1-1 to 8
NM RPS Active	9aa7ddf2-4ffc	W13701	EPENMAGG1S NM188S	EPENMAGG1S NM188S	Solar	6/1/2024	6/1/2024	6/30/2024	NM	N/A	11	13701-NM-06-2024-DCE5164E-1 to 11
NM RPS Active	9aa7ddf2-4ffc	W13702	EPENMAGG1S NM189S	EPENMAGG1S NM189S	Solar	6/1/2024	6/1/2024	6/30/2024	NM	N/A	13	13702-NM-06-2024-9009800B-1 to 13
NM RPS Active	9aa7ddf2-4ffc	W13799	EPENMAGG1S NM190S	EPENMAGG1S NM190S	Solar	6/1/2024	6/1/2024	6/30/2024	NM	N/A	11	13799-NM-06-2024-EFCE1FE9-1 to 11
NM RPS Active	9aa7ddf2-4ffc	W13801	EPENMAGG1S NM191S	EPENMAGG1S NM191S	Solar	6/1/2024	6/1/2024	6/30/2024	NM	N/A	5	13801-NM-06-2024-E426F455-1 to 5
NM RPS Active	9aa7ddf2-4ffc	W13802	EPENMAGG1S NM192S	EPENMAGG1S NM192S	Solar	6/1/2024	6/1/2024	6/30/2024	NM	N/A	7	13802-NM-06-2024-6A0476E5-1 to 7
NM RPS Active	9aa7ddf2-4ffc	W13803	EPENMAGG1S NM193S	EPENMAGG1S NM193S	Solar	6/1/2024	6/1/2024	6/30/2024	NM	N/A	8	13803-NM-06-2024-0B172C18-1 to 8
NM RPS Active	9aa7ddf2-4ffc	W13804	EPENMAGG1S NM194S	EPENMAGG1S NM194S	Solar	6/1/2024	6/1/2024	6/30/2024	NM	N/A	11	13804-NM-06-2024-4BD2F005-1 to 11
NM RPS Active	9aa7ddf2-4ffc	W13897	EPENMAGG1S NM195S	EPENMAGG1S NM195S	Solar	6/1/2024	6/1/2024	6/30/2024	NM	N/A	11	13897-NM-06-2024-C06A65D0-1 to 11
NM RPS Active	9aa7ddf2-4ffc	W13898	EPENMAGG1S NM196S	EPENMAGG1S NM196S	Solar	6/1/2024	6/1/2024	6/30/2024	NM	N/A	11	13898-NM-06-2024-3F0495ED-1 to 11
NM RPS Active	9aa7ddf2-4ffc	W13972	EPENMAGG1S NM197S	EPENMAGG1S NM197S	Solar	6/1/2024	6/1/2024	6/30/2024	NM	N/A	9	13972-NM-06-2024-E72E133F-1 to 9
NM RPS Active	9aa7ddf2-4ffc	W13973	EPENMAGG1S NM198S	EPENMAGG1S NM198S	Solar	6/1/2024	6/1/2024	6/30/2024	NM	N/A	6	13973-NM-06-2024-6CA743CD-1 to 6
NM RPS Active	9aa7ddf2-4ffc	W13975	EPENMAGG1S NM199S	EPENMAGG1S NM199S	Solar	6/1/2024	6/1/2024	6/30/2024	NM	N/A	9	13975-NM-06-2024-56ACE78D-1 to 9
NM RPS Active	9aa7ddf2-4ffc	W14044	EPENMAGG1S NM200S	EPENMAGG1S NM200S	Solar	6/1/2024	6/1/2024	6/30/2024	NM	N/A	9	14044-NM-06-2024-26C49C8A-1 to 9
NM RPS Active	9aa7ddf2-4ffc	W14045	EPENMAGG1S NM201S	EPENMAGG1S NM201S	Solar	6/1/2024	6/1/2024	6/30/2024	NM	SMUD	11	14045-NM-06-2024-B3B82876-1 to 11
NM RPS Active	9aa7ddf2-4ffc	W14046	EPENMAGG1S NM202S	EPENMAGG1S NM202S	Solar	6/1/2024	6/1/2024	6/30/2024	NM	N/A	4	14046-NM-06-2024-407A9166-1 to 4
NM RPS Active	9aa7ddf2-4ffc	W14049	EPENMAGG1S NM204S	EPENMAGG1S NM204S	Solar	6/1/2024	6/1/2024	6/30/2024	NM	SMUD	8	14049-NM-06-2024-12007E47-1 to 8
NM RPS Active	9aa7ddf2-4ffc	W14225	N/A	EPENMAGG1S NM205S	Solar	6/1/2024	6/1/2024	6/30/2024	NM	N/A	8	14225-NM-06-2024-487F3952-1 to 8
NM RPS Active	9aa7ddf2-4ffc	W14230	N/A	EPENMAGG1S NM206S	Solar	6/1/2024	6/1/2024	6/30/2024	NM	N/A	5	14230-NM-06-2024-8EC4C630-1 to 5
NM RPS Active	9aa7ddf2-4ffc	W14334	N/A	EPENMAGG1S NM207S	Solar	6/1/2024	6/1/2024	6/30/2024	NM	N/A	11	14334-NM-06-2024-B2D1B284-1 to 11
NM RPS Active	9aa7ddf2-4ffc	W15470	N/A	EPENMAGG1S NM208S	Solar	6/1/2024	6/1/2024	6/30/2024	NM	N/A	7	15470-NM-06-2024-8B7B9C40-1 to 7
NM RPS Active	9aa7ddf2-4ffc	W15471	N/A	EPENMAGG1S NM209S	Solar	6/1/2024	6/1/2024	6/30/2024	NM	N/A	10	15471-NM-06-2024-AFD59C1D-1 to 10
NM RPS Active	9aa7ddf2-4ffc	W15472	N/A	EPENMAGG1S NM210S	Solar	6/1/2024	6/1/2024	6/30/2024	NM	N/A	10	15472-NM-06-2024-D39A905E-1 to 10
NM RPS Active	9aa7ddf2-4ffc	W15473	N/A	EPENMAGG1S NM211S	Solar	6/1/2024	6/1/2024	6/30/2024	NM	N/A	5	15473-NM-06-2024-33ADB70C-1 to 5
NM RPS Active	9aa7ddf2-4ffc	W15474	N/A	EPENMAGG1S NM212S	Solar	6/1/2024	6/1/2024	6/30/2024	NM	N/A	5	15474-NM-06-2024-BAAB0FE0-1 to 5
NM RPS Active	9aa7ddf2-4ffc	W15475	N/A	EPENMAGG1S NM213S	Solar	6/1/2024	6/1/2024	6/30/2024	NM	N/A	6	15475-NM-06-2024-0C5107A2-1 to 6
NM RPS Active	9aa7ddf2-4ffc	W15517	N/A	EPENMAGG1S NM214S	Solar	6/1/2024	6/1/2024	6/30/2024	NM	N/A	7	15517-NM-06-2024-A7439D7B-1 to 7

Account	Account ID	WREGIS GU ID	Unit Name	Facility Name	Fuel Type	Vintage	Generation Start Date	Generation End Date	Generator Location	Eligility	Quantity (RECs)	Serial Numbers
NM RPS Active	9aa7ddf2-4ffc	W15518	N/A	EPENMAGG1S NM215S	Solar	6/1/2024	6/1/2024	6/30/2024	NM	N/A	12	15518-NM-06-2024-DD7DA986-1 to 12
NM RPS Active	9aa7ddf2-4ffc	W15519	N/A	EPENMAGG1S NM216S	Solar	6/1/2024	6/1/2024	6/30/2024	NM	N/A	9	15519-NM-06-2024-2C7A09AF-1 to 9
NM RPS Active	9aa7ddf2-4ffc	W15520	N/A	EPENMAGG1S NM217S	Solar	6/1/2024	6/1/2024	6/30/2024	NM	N/A	6	15520-NM-06-2024-F77E094A-1 to 6
NM RPS Active	9aa7ddf2-4ffc	W15521	N/A	EPENMAGG1S NM218S	Solar	6/1/2024	6/1/2024	6/30/2024	NM	N/A	4	15521-NM-06-2024-F6073358-1 to 4
NM RPS Active	9aa7ddf2-4ffc	W15533	N/A	EPENMAGG1S NM219S	Solar	6/1/2024	6/1/2024	6/30/2024	NM	N/A	11	15533-NM-06-2024-668CC0EB-1 to 11
NM RPS Active	9aa7ddf2-4ffc	W15702	N/A	EPENMAGG1S NM220S	Solar	6/1/2024	6/1/2024	6/30/2024	NM	N/A	6	15702-NM-06-2024-D171F7B8-1 to 6
NM RPS Active	9aa7ddf2-4ffc	W15703	N/A	EPENMAGG1S NM221S	Solar	6/1/2024	6/1/2024	6/30/2024	NM	N/A	13	15703-NM-06-2024-5CE461F8-1 to 13
NM RPS Active	9aa7ddf2-4ffc	W15704	N/A	EPENMAGG1S NM222S	Solar	6/1/2024	6/1/2024	6/30/2024	NM	N/A	13	15704-NM-06-2024-4DD5349B-1 to 13
NM RPS Active	9aa7ddf2-4ffc	W15705	N/A	EPENMAGG1S NM223S	Solar	6/1/2024	6/1/2024	6/30/2024	NM	N/A	11	15705-NM-06-2024-6DAA9568-1 to 11
NM RPS Active	9aa7ddf2-4ffc	W16065	N/A	EPENMAGG1S NM224S	Solar	6/1/2024	6/1/2024	6/30/2024	NM	N/A	6	16065-NM-06-2024-8AB832D0-1 to 6
NM RPS Active	9aa7ddf2-4ffc	W16066	N/A	EPENMAGG1S NM225S	Solar	6/1/2024	6/1/2024	6/30/2024	NM	N/A	7	16066-NM-06-2024-8705297D-1 to 7
NM RPS Active	9aa7ddf2-4ffc	W16067	N/A	EPENMAGG1S NM226S	Solar	6/1/2024	6/1/2024	6/30/2024	NM	N/A	5	16067-NM-06-2024-274CA073-1 to 5
NM RPS Active	9aa7ddf2-4ffc	W16490	N/A	EPENMAGG1S NM227S	Solar	6/1/2024	6/1/2024	6/30/2024	NM	N/A	10	16490-NM-06-2024-B17D8C56-1 to 10
NM RPS Active	9aa7ddf2-4ffc	W16492	N/A	EPENMAGG1S NM229S	Solar	6/1/2024	6/1/2024	6/30/2024	NM	N/A	15	16492-NM-06-2024-A7E5F0E4-1 to 15
NM RPS Active	9aa7ddf2-4ffc	W16493	N/A	EPENMAGG1S NM230S	Solar	6/1/2024	6/1/2024	6/30/2024	NM	N/A	19	16493-NM-06-2024-AAB52B81-1 to 19
NM RPS Active	9aa7ddf2-4ffc	W16494	N/A	EPENMAGG1S NM231S	Solar	6/1/2024	6/1/2024	6/30/2024	NM	N/A	9	16494-NM-06-2024-96396451-1 to 9
NM RPS Active	9aa7ddf2-4ffc	W17425	N/A	EPENMAGG1S NM232S	Solar	6/1/2024	6/1/2024	6/30/2024	NM	N/A	6	17425-NM-06-2024-FC3602C8-1 to 6
NM RPS Active	9aa7ddf2-4ffc	W17426	N/A	EPENMAGG1S NM233S	Solar	6/1/2024	6/1/2024	6/30/2024	NM	N/A	7	17426-NM-06-2024-619D785A-1 to 7
NM RPS Active	9aa7ddf2-4ffc	W17427	N/A	EPENMAGG1S NM235S	Solar	6/1/2024	6/1/2024	6/30/2024	NM	N/A	5	17427-NM-06-2024-EA69B294-1 to 5
NM RPS Active	9aa7ddf2-4ffc	W17428	N/A	EPENMAGG1S NM236S	Solar	6/1/2024	6/1/2024	6/30/2024	NM	N/A	10	17428-NM-06-2024-97A8D0D8-1 to 10
NM RPS Active	9aa7ddf2-4ffc	W17429	N/A	EPENMAGG1S NM237S	Solar	6/1/2024	6/1/2024	6/30/2024	NM	N/A	11	17429-NM-06-2024-56A15E6F-1 to 11
NM RPS Active	9aa7ddf2-4ffc	W17430	N/A	EPENMAGG1S NM238S	Solar	6/1/2024	6/1/2024	6/30/2024	NM	N/A	8	17430-NM-06-2024-8D8600CD-1 to 8
NM RPS Active	9aa7ddf2-4ffc	W17431	N/A	EPENMAGG1S NM239S	Solar	6/1/2024	6/1/2024	6/30/2024	NM	N/A	10	17431-NM-06-2024-687D5CB4-1 to 10
NM RPS Active	9aa7ddf2-4ffc	W17432	N/A	EPENMAGG1S NM240S	Solar	6/1/2024	6/1/2024	6/30/2024	NM	N/A	17	17432-NM-06-2024-F159E125-1 to 17
NM RPS Active	9aa7ddf2-4ffc	W17433	N/A	EPENMAGG1S NM241S	Solar	6/1/2024	6/1/2024	6/30/2024	NM	N/A	11	17433-NM-06-2024-C7AB1C0B-1 to 11
NM RPS Active	9aa7ddf2-4ffc	W17434	N/A	EPENMAGG1S NM242S	Solar	6/1/2024	6/1/2024	6/30/2024	NM	N/A	9	17434-NM-06-2024-4AF17299-1 to 9
NM RPS Active	9aa7ddf2-4ffc	W17435	N/A	EPENMAGG1S NM243S	Solar	6/1/2024	6/1/2024	6/30/2024	NM	N/A	6	17435-NM-06-2024-D5A5D9EA-1 to 6
NM RPS Active	9aa7ddf2-4ffc	W17436	N/A	EPENMAGG1S NM244S	Solar	6/1/2024	6/1/2024	6/30/2024	NM	N/A	10	17436-NM-06-2024-FF05DE66-1 to 10
NM RPS Active	9aa7ddf2-4ffc	W17546	N/A	EPENMAGG1S NM245S	Solar	6/1/2024	6/1/2024	6/30/2024	NM	N/A	11	17546-NM-06-2024-01195554-1 to 11
NM RPS Active	9aa7ddf2-4ffc	W17824	N/A	EPENMAGG1S NM246S	Solar	6/1/2024	6/1/2024	6/30/2024	NM	N/A	8	17824-NM-06-2024-A77CEAC1-1 to 8
NM RPS Active	9aa7ddf2-4ffc	W17825	N/A	EPENMAGG1S NM247S	Solar	6/1/2024	6/1/2024	6/30/2024	NM	N/A	7	17825-NM-06-2024-65F538AB-1 to 7
NM RPS Active	9aa7ddf2-4ffc	W18165	N/A	EPENMAGG1S NM248S	Solar	6/1/2024	6/1/2024	6/30/2024	NM	N/A	20	18165-NM-06-2024-6B2AD963-1 to 20
NM RPS Active	9aa7ddf2-4ffc	W18166	N/A	EPENMAGG1S NM249S	Solar	6/1/2024	6/1/2024	6/30/2024	NM	N/A	12	18166-NM-06-2024-3B9109D5-1 to 12
NM RPS Active	9aa7ddf2-4ffc	W18167	N/A	EPENMAGG1S NM250S	Solar	6/1/2024	6/1/2024	6/30/2024	NM	N/A	10	18167-NM-06-2024-7D184DFA-1 to 10
NM RPS Active	9aa7ddf2-4ffc	W18279	N/A	EPENMAGG1S NM251S	Solar	6/1/2024	6/1/2024	6/30/2024	NM	N/A	6	18279-NM-06-2024-09AADB49-1 to 6
NM RPS Active	9aa7ddf2-4ffc	W18280	N/A	EPENMAGG1S NM252S	Solar	6/1/2024	6/1/2024	6/30/2024	NM	N/A	15	18280-NM-06-2024-62CDFF91-1 to 15
NM RPS Active	9aa7ddf2-4ffc	W18547	N/A	EPENMAGG1S NM253S	Solar	6/1/2024	6/1/2024	6/30/2024	NM	N/A	5	18547-NM-06-2024-72E971DF-1 to 5
NM RPS Active	9aa7ddf2-4ffc	W18548	N/A	EPENMAGG1S NM254S	Solar	6/1/2024	6/1/2024	6/30/2024	NM	N/A	9	18548-NM-06-2024-C05893A5-1 to 9
NM RPS Active	9aa7ddf2-4ffc	W18750	N/A	EPENMAGG1S NM255S	Solar	6/1/2024	6/1/2024	6/30/2024	NM	N/A	5	18750-NM-06-2024-3852E76F-1 to 5
NM RPS Active	9aa7ddf2-4ffc	W12647	EPE NM174S - City of Las Cruces - Water Treatment Facilities	EPE NM174S	Solar	7/1/2024	7/1/2024	7/31/2024	NM	N/A	9	12647-NM-07-2024-E8194C55-1 to 9
NM RPS Active	9aa7ddf2-4ffc	W3622	EPENMAGG1S NM001S	EPENMAGG1S NM001S	Solar	7/1/2024	7/1/2024	7/31/2024	NM	N/A	2	3622-NM-07-2024-5CB4A5C1-1 to 2
NM RPS Active	9aa7ddf2-4ffc	W3624	EPENMAGG1S NM002S	EPENMAGG1S NM002S	Solar	7/1/2024	7/1/2024	7/31/2024	NM	N/A	2	3624-NM-07-2024-5ADA10D0-1 to 2
NM RPS Active	9aa7ddf2-4ffc	W3637	EPENMAGG1S NM003S	EPENMAGG1S NM003S	Solar	7/1/2024	7/1/2024	7/31/2024	NM	N/A	2	3637-NM-07-2024-B72BA1D9-1 to 2
NM RPS Active	9aa7ddf2-4ffc	W3638	EPENMAGG1S NM004S	EPENMAGG1S NM004S	Solar	7/1/2024	7/1/2024	7/31/2024	NM	N/A	1	3638-NM-07-2024-97036515-1 to 1
NM RPS Active	9aa7ddf2-4ffc	W3641	EPENMAGG1s NM007S	EPENMAGG1s NM007S	Solar	7/1/2024	7/1/2024	7/31/2024	NM	N/A	2	3641-NM-07-2024-FE79D079-1 to 2
NM RPS Active	9aa7ddf2-4ffc	W3642	EPENMAGG1s NM008S	EPENMAGG1s NM008S	Solar	7/1/2024	7/1/2024	7/31/2024	NM	N/A	1	3642-NM-07-2024-4154B9C1-1 to 1
NM RPS Active	9aa7ddf2-4ffc	W3644	EPENMAGG1S NM010S	EPENMAGG1S NM010S	Solar	7/1/2024	7/1/2024	7/31/2024	NM	N/A	1	3644-NM-07-2024-8FD67181-1 to 1
NM RPS Active	9aa7ddf2-4ffc	W3647	EPENMAGG1S NM013S	EPENMAGG1S NM013S	Solar	7/1/2024	7/1/2024	7/31/2024	NM	N/A	1	3647-NM-07-2024-6C6F27BE-1 to 1
NM RPS Active	9aa7ddf2-4ffc	W3650	EPENMAGG1S NM016S	EPENMAGG1S NM016S	Solar	7/1/2024	7/1/2024	7/31/2024	NM	N/A	1	3650-NM-07-2024-B6EDA7C5-1 to 1
NM RPS Active	9aa7ddf2-4ffc	W3651	EPENMAGG1S NM017S	EPENMAGG1S NM017S	Solar	7/1/2024	7/1/2024	7/31/2024	NM	N/A	2	3651-NM-07-2024-B78FB854-1 to 2
NM RPS Active	9aa7ddf2-4ffc	W3652	EPENMAGG1S NM018S	EPENMAGG1S NM018S	Solar	7/1/2024	7/1/2024	7/31/2024	NM	N/A	2	3652-NM-07-2024-4446F135-1 to 2
NM RPS Active	9aa7ddf2-4ffc	W3653	EPENMAGG1S NM019S	EPENMAGG1S NM019S	Solar	7/1/2024	7/1/2024	7/31/2024	NM	N/A	3	3653-NM-07-2024-6D7B9214-1 to 3
NM RPS Active	9aa7ddf2-4ffc	W3654	EPENMAGG1S NM020S	EPENMAGG1S NM020S	Solar	7/1/2024	7/1/2024	7/31/2024	NM	N/A	1	3654-NM-07-2024-E4A79E93-1 to 1
NM RPS Active	9aa7ddf2-4ffc	W3655	EPENMAGG1S NM021S	EPENMAGG1S NM021S	Solar	7/1/2024	7/1/2024	7/31/2024	NM	N/A	5	3655-NM-07-2024-68DDCFC0-1 to 5
NM RPS Active	9aa7ddf2-4ffc	W3656	EPENMAGG1S NM022S	EPENMAGG1S NM022S	Solar	7/1/2024	7/1/2024	7/31/2024	NM	N/A	3	3656-NM-07-2024-931F4FF5-1 to 3
NM RPS Active	9aa7ddf2-4ffc	W3657	EPENMAGG1S NM023S	EPENMAGG1S NM023S	Solar	7/1/2024	7/1/2024	7/31/2024	NM	N/A	6	3657-NM-07-2024-025F0518-1 to 6

Account	Account ID	WREGIS GU ID	Unit Name	Facility Name	Fuel Type	Vintage	Generation Start Date	Generation End Date	Generator Location	Eligility	Quantity (RECs)	Serial Numbers
NM RPS Active	9aa7ddf2-4ffc	W3658	EPENMAGG1S NM024S	EPENMAGG1S NM024S	Solar	7/1/2024	7/1/2024	7/31/2024	NM	N/A	3	3658-NM-07-2024-E672B35C-1 to 3
NM RPS Active	9aa7ddf2-4ffc	W3659	EPENMAGG1S NM025S	EPENMAGG1S NM025S	Solar	7/1/2024	7/1/2024	7/31/2024	NM	N/A	2	3659-NM-07-2024-05772580-1 to 2
NM RPS Active	9aa7ddf2-4ffc	W3660	EPENMAGG1S NM026S	EPENMAGG1S NM026S	Solar	7/1/2024	7/1/2024	7/31/2024	NM	N/A	1	3660-NM-07-2024-A58463E8-1 to 1
NM RPS Active	9aa7ddf2-4ffc	W3838	EPENMAGG1S NM027S	EPENMAGG1S NM027S	Solar	7/1/2024	7/1/2024	7/31/2024	NM	N/A	5	3838-NM-07-2024-BD078C7F-1 to 5
NM RPS Active	9aa7ddf2-4ffc	W3839	EPENMAGG1S NM028S	EPENMAGG1S NM028S	Solar	7/1/2024	7/1/2024	7/31/2024	NM	N/A	1	3839-NM-07-2024-F05FB3F5-1 to 1
NM RPS Active	9aa7ddf2-4ffc	W3946	EPENMAGG1S NM029S	EPENMAGG1S NM029S	Solar	7/1/2024	7/1/2024	7/31/2024	NM	N/A	2	3946-NM-07-2024-E5576072-1 to 2
NM RPS Active	9aa7ddf2-4ffc	W3947	EPENMAGG1S NM030S	EPENMAGG1S NM030S	Solar	7/1/2024	7/1/2024	7/31/2024	NM	N/A	2	3947-NM-07-2024-E6CD852C-1 to 2
NM RPS Active	9aa7ddf2-4ffc	W3948	EPENMAGG1S NM031S	EPENMAGG1S NM031S	Solar	7/1/2024	7/1/2024	7/31/2024	NM	N/A	2	3948-NM-07-2024-FA2B7222-1 to 2
NM RPS Active	9aa7ddf2-4ffc	W3949	EPENMAGG1S NM032S	EPENMAGG1S NM032S	Solar	7/1/2024	7/1/2024	7/31/2024	NM	N/A	2	3949-NM-07-2024-BA844C66-1 to 2
NM RPS Active	9aa7ddf2-4ffc	W3951	EPENMAGG1S NM034S	EPENMAGG1S NM034S	Solar	7/1/2024	7/1/2024	7/31/2024	NM	N/A	3	3951-NM-07-2024-12BA8057-1 to 3
NM RPS Active	9aa7ddf2-4ffc	W3952	EPENMAGG1S NM035S	EPENMAGG1S NM035S	Solar	7/1/2024	7/1/2024	7/31/2024	NM	N/A	2	3952-NM-07-2024-49EC4C4B-1 to 2
NM RPS Active	9aa7ddf2-4ffc	W4101	EPENMAGG1S NM036S	EPENMAGG1S NM036S	Solar	7/1/2024	7/1/2024	7/31/2024	NM	N/A	2	4101-NM-07-2024-24EEE662-1 to 2
NM RPS Active	9aa7ddf2-4ffc	W4121	EPENMAGG1S NM037S	EPENMAGG1S NM037S	Solar	7/1/2024	7/1/2024	7/31/2024	NM	N/A	1	4121-NM-07-2024-75A6BA44-1 to 1
NM RPS Active	9aa7ddf2-4ffc	W4221	EPENMAGG1S NM038S	EPENMAGG1S NM038S	Solar	7/1/2024	7/1/2024	7/31/2024	NM	N/A	3	4221-NM-07-2024-947E0A5E-1 to 3
NM RPS Active	9aa7ddf2-4ffc	W4437	EPENMAGG1S NM042S	EPENMAGG1S NM042S	Solar	7/1/2024	7/1/2024	7/31/2024	NM	N/A	3	4437-NM-07-2024-9BC5F96A-1 to 3
NM RPS Active	9aa7ddf2-4ffc	W4459	EPENMAGG1S NM043S	EPENMAGG1S NM043S	Solar	7/1/2024	7/1/2024	7/31/2024	NM	N/A	6	4459-NM-07-2024-DE1D0F66-1 to 6
NM RPS Active	9aa7ddf2-4ffc	W4507	EPENMAGG1S NM044S	EPENMAGG1S NM044S	Solar	7/1/2024	7/1/2024	7/31/2024	NM	N/A	2	4507-NM-07-2024-5866C355-1 to 2
NM RPS Active	9aa7ddf2-4ffc	W4649	EPENMAGG1S NM045S	EPENMAGG1S NM045S	Solar	7/1/2024	7/1/2024	7/31/2024	NM	N/A	2	4649-NM-07-2024-55C733EB-1 to 2
NM RPS Active	9aa7ddf2-4ffc	W4704	EPENMAGG1S NM046S	EPENMAGG1S NM046S	Solar	7/1/2024	7/1/2024	7/31/2024	NM	N/A	1	4704-NM-07-2024-C49CFD60-1 to 1
NM RPS Active	9aa7ddf2-4ffc	W4806	EPENMAGG1S NM048S	EPENMAGG1S NM048S	Solar	7/1/2024	7/1/2024	7/31/2024	NM	N/A	1	4806-NM-07-2024-9543E511-1 to 1
NM RPS Active	9aa7ddf2-4ffc	W4843	EPENMAGG1S NM051S	EPENMAGG1S NM051S	Solar	7/1/2024	7/1/2024	7/31/2024	NM	N/A	3	4843-NM-07-2024-5EE11D00-1 to 3
NM RPS Active	9aa7ddf2-4ffc	W5022	EPENMAGG1S NM053S	EPENMAGG1S NM053S	Solar	7/1/2024	7/1/2024	7/31/2024	NM	N/A	4	5022-NM-07-2024-30059D4F-1 to 4
NM RPS Active	9aa7ddf2-4ffc	W5071	EPENMAGG1S NM054S	EPENMAGG1S NM054S	Solar	7/1/2024	7/1/2024	7/31/2024	NM	N/A	2	5071-NM-07-2024-5ADC095D-1 to 2
NM RPS Active	9aa7ddf2-4ffc	W5080	EPENMAGG1S NM056S	EPENMAGG1S NM056S	Solar	7/1/2024	7/1/2024	7/31/2024	NM	N/A	3	5080-NM-07-2024-FCF0E729-1 to 3
NM RPS Active	9aa7ddf2-4ffc	W5111	EPENMAGG1S NM057S	EPENMAGG1S NM057S	Solar	7/1/2024	7/1/2024	7/31/2024	NM	N/A	1	5111-NM-07-2024-80AA59DB-1 to 1
NM RPS Active	9aa7ddf2-4ffc	W5112	EPENMAGG1S NM058S	EPENMAGG1S NM058S	Solar	7/1/2024	7/1/2024	7/31/2024	NM	N/A	1	5112-NM-07-2024-3518E9B8-1 to 1
NM RPS Active	9aa7ddf2-4ffc	W5280	EPENMAGG1S NM059S	EPENMAGG1S NM059S	Solar	7/1/2024	7/1/2024	7/31/2024	NM	N/A	2	5280-NM-07-2024-F5347FB2-1 to 2
NM RPS Active	9aa7ddf2-4ffc	W5320	EPENMAGG1S NM062S	EPENMAGG1S NM062S	Solar	7/1/2024	7/1/2024	7/31/2024	NM	N/A	1	5320-NM-07-2024-0C54F517-1 to 1
NM RPS Active	9aa7ddf2-4ffc	W5379	EPENMAGG1S NM063S	EPENMAGG1S NM063S	Solar	7/1/2024	7/1/2024	7/31/2024	NM	N/A	2	5379-NM-07-2024-5D323ECD-1 to 2
NM RPS Active	9aa7ddf2-4ffc	W5469	EPENMAGG1S NM064S	EPENMAGG1S NM064S	Solar	7/1/2024	7/1/2024	7/31/2024	NM	N/A	1	5469-NM-07-2024-AC7DAC66-1 to 1
NM RPS Active	9aa7ddf2-4ffc	W5547	EPENMAGG1S NM065S	EPENMAGG1S NM065S	Solar	7/1/2024	7/1/2024	7/31/2024	NM	N/A	1	5547-NM-07-2024-9EF21250-1 to 1
NM RPS Active	9aa7ddf2-4ffc	W5652	EPENMAGG1S NM067S	EPENMAGG1S NM067S	Solar	7/1/2024	7/1/2024	7/31/2024	NM	N/A	3	5652-NM-07-2024-6A3A0EC6-1 to 3
NM RPS Active	9aa7ddf2-4ffc	W5742	EPENMAGG1S NM070S	EPENMAGG1S NM070S	Solar	7/1/2024	7/1/2024	7/31/2024	NM	N/A	1	5742-NM-07-2024-12FA339F-1 to 1
NM RPS Active	9aa7ddf2-4ffc	W7117	EPENMAGG1S NM075S	EPENMAGG1S NM075S	Solar	7/1/2024	7/1/2024	7/31/2024	NM	N/A	2	7117-NM-07-2024-026F9677-1 to 2
NM RPS Active	9aa7ddf2-4ffc	W7118	EPENMAGG1S NM076S	EPENMAGG1S NM076S	Solar	7/1/2024	7/1/2024	7/31/2024	NM	N/A	1	7118-NM-07-2024-463075EF-1 to 1
NM RPS Active	9aa7ddf2-4ffc	W7119	EPENMAGG1S NM077S	EPENMAGG1S NM077S	Solar	7/1/2024	7/1/2024	7/31/2024	NM	N/A	3	7119-NM-07-2024-ABBB32A4-1 to 3
NM RPS Active	9aa7ddf2-4ffc	W7120	EPENMAGG1S NM078S	EPENMAGG1S NM078S	Solar	7/1/2024	7/1/2024	7/31/2024	NM	N/A	3	7120-NM-07-2024-EA3C922B-1 to 3
NM RPS Active	9aa7ddf2-4ffc	W7121	EPENMAGG1S NM079S	EPENMAGG1S NM079S	Solar	7/1/2024	7/1/2024	7/31/2024	NM	N/A	1	7121-NM-07-2024-EE7B7DA0-1 to 1
NM RPS Active	9aa7ddf2-4ffc	W7324	EPENMAGG1S NM080S	EPENMAGG1S NM080S	Solar	7/1/2024	7/1/2024	7/31/2024	NM	N/A	1	7324-NM-07-2024-7B17FDAF-1 to 1
NM RPS Active	9aa7ddf2-4ffc	W7325	EPENMAGG1S NM081S	EPENMAGG1S NM081S	Solar	7/1/2024	7/1/2024	7/31/2024	NM	N/A	3	7325-NM-07-2024-CB694A4F-1 to 3
NM RPS Active	9aa7ddf2-4ffc	W7332	EPENMAGG1S NM082S	EPENMAGG1S NM082S	Solar	7/1/2024	7/1/2024	7/31/2024	NM	N/A	1	7332-NM-07-2024-5166A88E-1 to 1
NM RPS Active	9aa7ddf2-4ffc	W7333	EPENMAGG1S NM083S	EPENMAGG1S NM083S	Solar	7/1/2024	7/1/2024	7/31/2024	NM	N/A	3	7333-NM-07-2024-6E1FD30F-1 to 3
NM RPS Active	9aa7ddf2-4ffc	W7424	EPENMAGG1S NM084S	EPENMAGG1S NM084S	Solar	7/1/2024	7/1/2024	7/31/2024	NM	N/A	2	7424-NM-07-2024-211EF4C7-1 to 2
NM RPS Active	9aa7ddf2-4ffc	W7425	EPENMAGG1S NM085S	EPENMAGG1S NM085S	Solar	7/1/2024	7/1/2024	7/31/2024	NM	N/A	2	7425-NM-07-2024-53E856C3-1 to 2
NM RPS Active	9aa7ddf2-4ffc	W7547	EPENMAGG1S NM086S	EPENMAGG1S NM086S	Solar	7/1/2024	7/1/2024	7/31/2024	NM	N/A	1	7547-NM-07-2024-3C433BDA-1 to 1
NM RPS Active	9aa7ddf2-4ffc	W7555	EPENMAGG1S NM088S	EPENMAGG1S NM088S	Solar	7/1/2024	7/1/2024	7/31/2024	NM	N/A	1	7555-NM-07-2024-F7A64D07-1 to 1
NM RPS Active	9aa7ddf2-4ffc	W7558	EPENMAGG1S NM091S	EPENMAGG1S NM091S	Solar	7/1/2024	7/1/2024	7/31/2024	NM	N/A	1	7558-NM-07-2024-FC7F6296-1 to 1
NM RPS Active	9aa7ddf2-4ffc	W7559	EPENMAGG1S NM092S	EPENMAGG1S NM092S	Solar	7/1/2024	7/1/2024	7/31/2024	NM	N/A	2	7559-NM-07-2024-B861339A-1 to 2
NM RPS Active	9aa7ddf2-4ffc	W7672	EPENMAGG1S NM095S	EPENMAGG1S NM095S	Solar	7/1/2024	7/1/2024	7/31/2024	NM	N/A	4	7672-NM-07-2024-4C8240C8-1 to 4
NM RPS Active	9aa7ddf2-4ffc	W7674	EPENMAGG1S NM097S	EPENMAGG1S NM097S	Solar	7/1/2024	7/1/2024	7/31/2024	NM	N/A	1	7674-NM-07-2024-A50CE555-1 to 1
NM RPS Active	9aa7ddf2-4ffc	W7699	EPENMAGG1S NM098S	EPENMAGG1S NM098S	Solar	7/1/2024	7/1/2024	7/31/2024	NM	N/A	1	7699-NM-07-2024-C4850F4E-1 to 1
NM RPS Active	9aa7ddf2-4ffc	W7700	EPENMAGG1S NM099S	EPENMAGG1S NM099S	Solar	7/1/2024	7/1/2024	7/31/2024	NM	N/A	1	7700-NM-07-2024-D4EE1247-1 to 1
NM RPS Active	9aa7ddf2-4ffc	W8123	EPENMAGG1S NM100S	EPENMAGG1S NM100S	Solar	7/1/2024	7/1/2024	7/31/2024	NM	N/A	1	8123-NM-07-2024-8F73794A-1 to 1
NM RPS Active	9aa7ddf2-4ffc	W8124	EPENMAGG1S NM101S	EPENMAGG1S NM101S	Solar	7/1/2024	7/1/2024	7/31/2024	NM	N/A	1	8124-NM-07-2024-54F7DC3F-1 to 1
NM RPS Active	9aa7ddf2-4ffc	W8197	EPENMAGG1S NM102S	EPENMAGG1S NM102S	Solar	7/1/2024	7/1/2024	7/31/2024	NM	N/A	2	8197-NM-07-2024-E7F20714-1 to 2
NM RPS Active	9aa7ddf2-4ffc	W8794	EPENMAGG1S NM104S	EPENMAGG1S NM104S	Solar	7/1/2024	7/1/2024	7/31/2024	NM	N/A	3	8794-NM-07-2024-66D72460-1 to 3
NM RPS Active	9aa7ddf2-4ffc	W8835	EPENMAGG1S NM105S	EPENMAGG1S NM105S	Solar	7/1/2024	7/1/2024	7/31/2024	NM	N/A	1	8835-NM-07-2024-3B9BFAE5-1 to 1
NM RPS Active	9aa7ddf2-4ffc	W8836	EPENMAGG1S NM106S	EPENMAGG1S NM106S	Solar	7/1/2024	7/1/2024	7/31/2024	NM	N/A	2	8836-NM-07-2024-B8BC18CC-1 to 2

Account	Account ID	WREGIS GU ID	Unit Name	Facility Name	Fuel Type	Vintage	Generation Start Date	Generation End Date	Generator Location	Eligility	Quantity (RECs)	Serial Numbers
NM RPS Active	9aa7ddf2-4ffc	W9324	EPENMAGG1S NM107S	EPENMAGG1S NM107S	Solar	7/1/2024	7/1/2024	7/31/2024	NM	N/A	6	9324-NM-07-2024-4D4E6767-1 to 6
NM RPS Active	9aa7ddf2-4ffc	W9325	EPENMAGG1S NM108S	EPENMAGG1S NM108S	Solar	7/1/2024	7/1/2024	7/31/2024	NM	N/A	1	9325-NM-07-2024-67526BEB-1 to 1
NM RPS Active	9aa7ddf2-4ffc	W9345	EPENMAGG1S NM110S	EPENMAGG1S NM110S	Solar	7/1/2024	7/1/2024	7/31/2024	NM	N/A	2	9345-NM-07-2024-9612A375-1 to 2
NM RPS Active	9aa7ddf2-4ffc	W9602	EPENMAGG1S NM111S	EPENMAGG1S NM111S	Solar	7/1/2024	7/1/2024	7/31/2024	NM	N/A	2	9602-NM-07-2024-38E22A09-1 to 2
NM RPS Active	9aa7ddf2-4ffc	W10025	EPENMAGG1S NM113S	EPENMAGG1S NM113S	Solar	7/1/2024	7/1/2024	7/31/2024	NM	N/A	9	10025-NM-07-2024-165D7D98-1 to 9
NM RPS Active	9aa7ddf2-4ffc	W10026	EPENMAGG1S NM114S	EPENMAGG1S NM114S	Solar	7/1/2024	7/1/2024	7/31/2024	NM	N/A	1	10026-NM-07-2024-B8B187BA-1 to 1
NM RPS Active	9aa7ddf2-4ffc	W10027	EPENMAGG1S NM115S	EPENMAGG1S NM115S	Solar	7/1/2024	7/1/2024	7/31/2024	NM	N/A	2	10027-NM-07-2024-5CA6C733-1 to 2
NM RPS Active	9aa7ddf2-4ffc	W10105	EPENMAGG1S NM116S	EPENMAGG1S NM116S	Solar	7/1/2024	7/1/2024	7/31/2024	NM	N/A	1	10105-NM-07-2024-B3463244-1 to 1
NM RPS Active	9aa7ddf2-4ffc	W10106	EPENMAGG1S NM117S	EPENMAGG1S NM117S	Solar	7/1/2024	7/1/2024	7/31/2024	NM	N/A	1	10106-NM-07-2024-03925C47-1 to 1
NM RPS Active	9aa7ddf2-4ffc	W10107	EPENMAGG1S NM118S	EPENMAGG1S NM118S	Solar	7/1/2024	7/1/2024	7/31/2024	NM	N/A	2	10107-NM-07-2024-C67962FC-1 to 2
NM RPS Active	9aa7ddf2-4ffc	W10167	EPENMAGG1S NM119S	EPENMAGG1S NM119S	Solar	7/1/2024	7/1/2024	7/31/2024	NM	N/A	2	10167-NM-07-2024-605AE702-1 to 2
NM RPS Active	9aa7ddf2-4ffc	W10460	EPENMAGG1S NM121S	EPENMAGG1S NM121S	Solar	7/1/2024	7/1/2024	7/31/2024	NM	N/A	1	10460-NM-07-2024-5FF7807C-1 to 1
NM RPS Active	9aa7ddf2-4ffc	W10461	EPENMAGG1S NM122S	EPENMAGG1S NM122S	Solar	7/1/2024	7/1/2024	7/31/2024	NM	N/A	2	10461-NM-07-2024-72AA23C8-1 to 2
NM RPS Active	9aa7ddf2-4ffc	W10695	EPENMAGG1S NM124S	EPENMAGG1S NM124S	Solar	7/1/2024	7/1/2024	7/31/2024	NM	N/A	1	10695-NM-07-2024-DA6DD49C-1 to 1
NM RPS Active	9aa7ddf2-4ffc	W10800	EPENMAGG1S NM125S	EPENMAGG1S NM125S	Solar	7/1/2024	7/1/2024	7/31/2024	NM	N/A	1	10800-NM-07-2024-CE91C450-1 to 1
NM RPS Active	9aa7ddf2-4ffc	W10820	EPENMAGG1S NM126S	EPENMAGG1S NM126S	Solar	7/1/2024	7/1/2024	7/31/2024	NM	N/A	2	10820-NM-07-2024-67AD8D64-1 to 2
NM RPS Active	9aa7ddf2-4ffc	W10821	EPENMAGG1S NM127S	EPENMAGG1S NM127S	Solar	7/1/2024	7/1/2024	7/31/2024	NM	N/A	1	10821-NM-07-2024-15634F6C-1 to 1
NM RPS Active	9aa7ddf2-4ffc	W10867	EPENMAGG1S NM128S	EPENMAGG1S NM128S	Solar	7/1/2024	7/1/2024	7/31/2024	NM	N/A	3	10867-NM-07-2024-0E013BC6-1 to 3
NM RPS Active	9aa7ddf2-4ffc	W10868	EPENMAGG1S NM129S	EPENMAGG1S NM129S	Solar	7/1/2024	7/1/2024	7/31/2024	NM	N/A	1	10868-NM-07-2024-E9AE42E2-1 to 1
NM RPS Active	9aa7ddf2-4ffc	W10925	EPENMAGG1S NM131S	EPENMAGG1S NM131S	Solar	7/1/2024	7/1/2024	7/31/2024	NM	N/A	1	10925-NM-07-2024-6FF17FE7-1 to 1
NM RPS Active	9aa7ddf2-4ffc	W10926	EPENMAGG1S NM132S	EPENMAGG1S NM132S	Solar	7/1/2024	7/1/2024	7/31/2024	NM	N/A	1	10926-NM-07-2024-D3138095-1 to 1
NM RPS Active	9aa7ddf2-4ffc	W11361	EPENMAGG1S NM133S	EPENMAGG1S NM133S	Solar	7/1/2024	7/1/2024	7/31/2024	NM	N/A	1	11361-NM-07-2024-E979CD47-1 to 1
NM RPS Active	9aa7ddf2-4ffc	W11363	EPENMAGG1S NM135S	EPENMAGG1S NM135S	Solar	7/1/2024	7/1/2024	7/31/2024	NM	N/A	1	11363-NM-07-2024-D7E18D98-1 to 1
NM RPS Active	9aa7ddf2-4ffc	W11374	EPENMAGG1S NM136S	EPENMAGG1S NM136S	Solar	7/1/2024	7/1/2024	7/31/2024	NM	N/A	2	11374-NM-07-2024-692BBE31-1 to 2
NM RPS Active	9aa7ddf2-4ffc	W11375	EPENMAGG1S NM137S	EPENMAGG1S NM137S	Solar	7/1/2024	7/1/2024	7/31/2024	NM	N/A	1	11375-NM-07-2024-440D4083-1 to 1
NM RPS Active	9aa7ddf2-4ffc	W11377	EPENMAGG1S NM138S	EPENMAGG1S NM138S	Solar	7/1/2024	7/1/2024	7/31/2024	NM	N/A	1	11377-NM-07-2024-3CADAF06-1 to 1
NM RPS Active	9aa7ddf2-4ffc	W11378	EPENMAGG1S NM139S	EPENMAGG1S NM139S	Solar	7/1/2024	7/1/2024	7/31/2024	NM	N/A	1	11378-NM-07-2024-3DFDB8BB-1 to 1
NM RPS Active	9aa7ddf2-4ffc	W11379	EPENMAGG1S NM140S	EPENMAGG1S NM140S	Solar	7/1/2024	7/1/2024	7/31/2024	NM	N/A	1	11379-NM-07-2024-1E269444-1 to 1
NM RPS Active	9aa7ddf2-4ffc	W11382	EPENMAGG1S NM142S	EPENMAGG1S NM142S	Solar	7/1/2024	7/1/2024	7/31/2024	NM	N/A	2	11382-NM-07-2024-08EFDA64-1 to 2
NM RPS Active	9aa7ddf2-4ffc	W11383	EPENMAGG1S NM143S	EPENMAGG1S NM143S	Solar	7/1/2024	7/1/2024	7/31/2024	NM	N/A	1	11383-NM-07-2024-AEF1A9C9-1 to 1
NM RPS Active	9aa7ddf2-4ffc	W11384	EPENMAGG1S NM144S	EPENMAGG1S NM144S	Solar	7/1/2024	7/1/2024	7/31/2024	NM	N/A	2	11384-NM-07-2024-BFD9F980-1 to 2
NM RPS Active	9aa7ddf2-4ffc	W11968	EPENMAGG1S NM145S	EPENMAGG1S NM145S	Solar	7/1/2024	7/1/2024	7/31/2024	NM	N/A	3	11968-NM-07-2024-D0E249F1-1 to 3
NM RPS Active	9aa7ddf2-4ffc	W11969	EPENMAGG1S NM146S	EPENMAGG1S NM146S	Solar	7/1/2024	7/1/2024	7/31/2024	NM	N/A	3	11969-NM-07-2024-D2AD9A92-1 to 3
NM RPS Active	9aa7ddf2-4ffc	W11972	EPENMAGG1S NM149S	EPENMAGG1S NM149S	Solar	7/1/2024	7/1/2024	7/31/2024	NM	N/A	3	11972-NM-07-2024-4EC1C9CC-1 to 3
NM RPS Active	9aa7ddf2-4ffc	W11973	EPENMAGG1S NM150S	EPENMAGG1S NM150S	Solar	7/1/2024	7/1/2024	7/31/2024	NM	N/A	2	11973-NM-07-2024-FECA567E-1 to 2
NM RPS Active	9aa7ddf2-4ffc	W11974	EPENMAGG1S NM151S	EPENMAGG1S NM151S	Solar	7/1/2024	7/1/2024	7/31/2024	NM	N/A	3	11974-NM-07-2024-83F6F2FA-1 to 3
NM RPS Active	9aa7ddf2-4ffc	W11975	EPENMAGG1S NM152S	EPENMAGG1S NM152S	Solar	7/1/2024	7/1/2024	7/31/2024	NM	N/A	3	11975-NM-07-2024-F8704FBD-1 to 3
NM RPS Active	9aa7ddf2-4ffc	W11976	EPENMAGG1S NM153S	EPENMAGG1S NM153S	Solar	7/1/2024	7/1/2024	7/31/2024	NM	N/A	2	11976-NM-07-2024-0E749F52-1 to 2
NM RPS Active	9aa7ddf2-4ffc	W11977	EPENMAGG1S NM154S	EPENMAGG1S NM154S	Solar	7/1/2024	7/1/2024	7/31/2024	NM	N/A	4	11977-NM-07-2024-247F8A3C-1 to 4
NM RPS Active	9aa7ddf2-4ffc	W11980	EPENMAGG1S NM156S	EPENMAGG1S NM156S	Solar	7/1/2024	7/1/2024	7/31/2024	NM	N/A	2	11980-NM-07-2024-1AB07C56-1 to 2
NM RPS Active	9aa7ddf2-4ffc	W11981	EPENMAGG1S NM157S	EPENMAGG1S NM157S	Solar	7/1/2024	7/1/2024	7/31/2024	NM	N/A	1	11981-NM-07-2024-A3C7D44D-1 to 1
NM RPS Active	9aa7ddf2-4ffc	W11982	EPENMAGG1S NM158S	EPENMAGG1S NM158S	Solar	7/1/2024	7/1/2024	7/31/2024	NM	N/A	1	11982-NM-07-2024-1C683931-1 to 1
NM RPS Active	9aa7ddf2-4ffc	W12098	EPENMAGG1S NM160S	EPENMAGG1S NM160S	Solar	7/1/2024	7/1/2024	7/31/2024	NM	N/A	2	12098-NM-07-2024-B5B8594C-1 to 2
NM RPS Active	9aa7ddf2-4ffc	W12099	EPENMAGG1S NM161S	EPENMAGG1S NM161S	Solar	7/1/2024	7/1/2024	7/31/2024	NM	N/A	2	12099-NM-07-2024-C0F35146-1 to 2
NM RPS Active	9aa7ddf2-4ffc	W12100	EPENMAGG1S NM162S	EPENMAGG1S NM162S	Solar	7/1/2024	7/1/2024	7/31/2024	NM	N/A	1	12100-NM-07-2024-6BB81B3C-1 to 1
NM RPS Active	9aa7ddf2-4ffc	W12101	EPENMAGG1S NM163S	EPENMAGG1S NM163S	Solar	7/1/2024	7/1/2024	7/31/2024	NM	N/A	3	12101-NM-07-2024-ACE5EDBE-1 to 3
NM RPS Active	9aa7ddf2-4ffc	W12188	EPENMAGG1S NM164S	EPENMAGG1S NM164S	Solar	7/1/2024	7/1/2024	7/31/2024	NM	N/A	1	12188-NM-07-2024-A522A0AF-1 to 1
NM RPS Active	9aa7ddf2-4ffc	W12260	EPENMAGG1S NM168S	EPENMAGG1S NM168S	Solar	7/1/2024	7/1/2024	7/31/2024	NM	N/A	2	12260-NM-07-2024-9769DBA5-1 to 2
NM RPS Active	9aa7ddf2-4ffc	W12643	EPENMAGG1S NM170S	EPENMAGG1S NM170S	Solar	7/1/2024	7/1/2024	7/31/2024	NM	N/A	6	12643-NM-07-2024-54C9A88B-1 to 6
NM RPS Active	9aa7ddf2-4ffc	W12646	EPENMAGG1S NM173S	EPENMAGG1S NM173S	Solar	7/1/2024	7/1/2024	7/31/2024	NM	N/A	3	12646-NM-07-2024-827C548A-1 to 3
NM RPS Active	9aa7ddf2-4ffc	W12702	EPENMAGG1S NM177S	EPENMAGG1S NM177S	Solar	7/1/2024	7/1/2024	7/31/2024	NM	N/A	2	12702-NM-07-2024-FF31CBB8-1 to 2
NM RPS Active	9aa7ddf2-4ffc	W12703	EPENMAGG1S NM178S	EPENMAGG1S NM178S	Solar	7/1/2024	7/1/2024	7/31/2024	NM	N/A	3	12703-NM-07-2024-39AABFE7-1 to 3
NM RPS Active	9aa7ddf2-4ffc	W12704	EPENMAGG1S NM179S	EPENMAGG1S NM179S	Solar	7/1/2024	7/1/2024	7/31/2024	NM	N/A	2	12704-NM-07-2024-F0CE0907-1 to 2
NM RPS Active	9aa7ddf2-4ffc	W12744	EPENMAGG1S NM180S	EPENMAGG1S NM180S	Solar	7/1/2024	7/1/2024	7/31/2024	NM	N/A	2	12744-NM-07-2024-8B5CF723-1 to 2
NM RPS Active	9aa7ddf2-4ffc	W12745	EPENMAGG1S NM181S	EPENMAGG1S NM181S	Solar	7/1/2024	7/1/2024	7/31/2024	NM	N/A	1	12745-NM-07-2024-CF1F20FE-1 to 1
NM RPS Active	9aa7ddf2-4ffc	W13207	EPENMAGG1S NM182S	EPENMAGG1S NM182S	Solar	7/1/2024	7/1/2024	7/31/2024	NM	N/A	1	13207-NM-07-2024-04614CAB-1 to 1
NM RPS Active	9aa7ddf2-4ffc	W13208	EPENMAGG1S NM183S	EPENMAGG1S NM183S	Solar	7/1/2024	7/1/2024	7/31/2024	NM	N/A	3	13208-NM-07-2024-4388B0D6-1 to 3
NM RPS Active	9aa7ddf2-4ffc	W13211	EPENMAGG1S NM185S	EPENMAGG1S NM185S	Solar	7/1/2024	7/1/2024	7/31/2024	NM	N/A	3	13211-NM-07-2024-6432A320-1 to 3

Account	Account ID	WREGIS GU ID	Unit Name	Facility Name	Fuel Type	Vintage	Generation Start Date	Generation End Date	Generator Location	Eligility	Quantity (RECs)	Serial Numbers
NM RPS Active	9aa7ddf2-4ffc	W13615	EPENMAGG1S NM186S	EPENMAGG1S NM186S	Solar	7/1/2024	7/1/2024	7/31/2024	NM	N/A	3	13615-NM-07-2024-1B9AD218-1 to 3
NM RPS Active	9aa7ddf2-4ffc	W13701	EPENMAGG1S NM188S	EPENMAGG1S NM188S	Solar	7/1/2024	7/1/2024	7/31/2024	NM	N/A	2	13701-NM-07-2024-23EBE348-1 to 2
NM RPS Active	9aa7ddf2-4ffc	W13702	EPENMAGG1S NM189S	EPENMAGG1S NM189S	Solar	7/1/2024	7/1/2024	7/31/2024	NM	N/A	3	13702-NM-07-2024-BCCC49BB-1 to 3
NM RPS Active	9aa7ddf2-4ffc	W13799	EPENMAGG1S NM190S	EPENMAGG1S NM190S	Solar	7/1/2024	7/1/2024	7/31/2024	NM	N/A	1	13799-NM-07-2024-BC46808A-1 to 1
NM RPS Active	9aa7ddf2-4ffc	W13801	EPENMAGG1S NM191S	EPENMAGG1S NM191S	Solar	7/1/2024	7/1/2024	7/31/2024	NM	N/A	2	13801-NM-07-2024-BC0B5AEC-1 to 2
NM RPS Active	9aa7ddf2-4ffc	W13802	EPENMAGG1S NM192S	EPENMAGG1S NM192S	Solar	7/1/2024	7/1/2024	7/31/2024	NM	N/A	4	13802-NM-07-2024-4AEE7B5D-1 to 4
NM RPS Active	9aa7ddf2-4ffc	W13803	EPENMAGG1S NM193S	EPENMAGG1S NM193S	Solar	7/1/2024	7/1/2024	7/31/2024	NM	N/A	5	13803-NM-07-2024-90FBC6EE-1 to 5
NM RPS Active	9aa7ddf2-4ffc	W13804	EPENMAGG1S NM194S	EPENMAGG1S NM194S	Solar	7/1/2024	7/1/2024	7/31/2024	NM	N/A	1	13804-NM-07-2024-B7B3752D-1 to 1
NM RPS Active	9aa7ddf2-4ffc	W13897	EPENMAGG1S NM195S	EPENMAGG1S NM195S	Solar	7/1/2024	7/1/2024	7/31/2024	NM	N/A	7	13897-NM-07-2024-49083698-1 to 7
NM RPS Active	9aa7ddf2-4ffc	W13898	EPENMAGG1S NM196S	EPENMAGG1S NM196S	Solar	7/1/2024	7/1/2024	7/31/2024	NM	N/A	4	13898-NM-07-2024-C2A4F346-1 to 4
NM RPS Active	9aa7ddf2-4ffc	W13972	EPENMAGG1S NM197S	EPENMAGG1S NM197S	Solar	7/1/2024	7/1/2024	7/31/2024	NM	N/A	2	13972-NM-07-2024-B58660A9-1 to 2
NM RPS Active	9aa7ddf2-4ffc	W13973	EPENMAGG1S NM198S	EPENMAGG1S NM198S	Solar	7/1/2024	7/1/2024	7/31/2024	NM	N/A	2	13973-NM-07-2024-23937EBA-1 to 2
NM RPS Active	9aa7ddf2-4ffc	W13975	EPENMAGG1S NM199S	EPENMAGG1S NM199S	Solar	7/1/2024	7/1/2024	7/31/2024	NM	N/A	2	13975-NM-07-2024-F7CB9CB1-1 to 2
NM RPS Active	9aa7ddf2-4ffc	W14044	EPENMAGG1S NM200S	EPENMAGG1S NM200S	Solar	7/1/2024	7/1/2024	7/31/2024	NM	N/A	1	14044-NM-07-2024-DDF3456F-1 to 1
NM RPS Active	9aa7ddf2-4ffc	W14045	EPENMAGG1S NM201S	EPENMAGG1S NM201S	Solar	7/1/2024	7/1/2024	7/31/2024	NM	SMUD	3	14045-NM-07-2024-11D97331-1 to 3
NM RPS Active	9aa7ddf2-4ffc	W14046	EPENMAGG1S NM202S	EPENMAGG1S NM202S	Solar	7/1/2024	7/1/2024	7/31/2024	NM	N/A	2	14046-NM-07-2024-56A6CD5A-1 to 2
NM RPS Active	9aa7ddf2-4ffc	W14049	EPENMAGG1S NM204S	EPENMAGG1S NM204S	Solar	7/1/2024	7/1/2024	7/31/2024	NM	SMUD	3	14049-NM-07-2024-C0F62C12-1 to 3
NM RPS Active	9aa7ddf2-4ffc	W14225	N/A	EPENMAGG1S NM205S	Solar	7/1/2024	7/1/2024	7/31/2024	NM	N/A	3	14225-NM-07-2024-FF14E690-1 to 3
NM RPS Active	9aa7ddf2-4ffc	W14230	N/A	EPENMAGG1S NM206S	Solar	7/1/2024	7/1/2024	7/31/2024	NM	N/A	2	14230-NM-07-2024-133DEC78-1 to 2
NM RPS Active	9aa7ddf2-4ffc	W14334	N/A	EPENMAGG1S NM207S	Solar	7/1/2024	7/1/2024	7/31/2024	NM	N/A	1	14334-NM-07-2024-ED84DC5D-1 to 1
NM RPS Active	9aa7ddf2-4ffc	W15470	N/A	EPENMAGG1S NM208S	Solar	7/1/2024	7/1/2024	7/31/2024	NM	N/A	3	15470-NM-07-2024-8E7E2EFD-1 to 3
NM RPS Active	9aa7ddf2-4ffc	W15471	N/A	EPENMAGG1S NM209S	Solar	7/1/2024	7/1/2024	7/31/2024	NM	N/A	2	15471-NM-07-2024-47F13A4B-1 to 2
NM RPS Active	9aa7ddf2-4ffc	W15472	N/A	EPENMAGG1S NM210S	Solar	7/1/2024	7/1/2024	7/31/2024	NM	N/A	2	15472-NM-07-2024-E81A7204-1 to 2
NM RPS Active	9aa7ddf2-4ffc	W15474	N/A	EPENMAGG1S NM212S	Solar	7/1/2024	7/1/2024	7/31/2024	NM	N/A	1	15474-NM-07-2024-040E016C-1 to 1
NM RPS Active	9aa7ddf2-4ffc	W15475	N/A	EPENMAGG1S NM213S	Solar	7/1/2024	7/1/2024	7/31/2024	NM	N/A	2	15475-NM-07-2024-53ED5531-1 to 2
NM RPS Active	9aa7ddf2-4ffc	W15517	N/A	EPENMAGG1S NM214S	Solar	7/1/2024	7/1/2024	7/31/2024	NM	N/A	1	15517-NM-07-2024-579A38A4-1 to 1
NM RPS Active	9aa7ddf2-4ffc	W15518	N/A	EPENMAGG1S NM215S	Solar	7/1/2024	7/1/2024	7/31/2024	NM	N/A	4	15518-NM-07-2024-1B9623B6-1 to 4
NM RPS Active	9aa7ddf2-4ffc	W15519	N/A	EPENMAGG1S NM216S	Solar	7/1/2024	7/1/2024	7/31/2024	NM	N/A	3	15519-NM-07-2024-DB4AD94F-1 to 3
NM RPS Active	9aa7ddf2-4ffc	W15520	N/A	EPENMAGG1S NM217S	Solar	7/1/2024	7/1/2024	7/31/2024	NM	N/A	2	15520-NM-07-2024-5318C1EC-1 to 2
NM RPS Active	9aa7ddf2-4ffc	W15521	N/A	EPENMAGG1S NM218S	Solar	7/1/2024	7/1/2024	7/31/2024	NM	N/A	2	15521-NM-07-2024-B1B2D220-1 to 2
NM RPS Active	9aa7ddf2-4ffc	W15533	N/A	EPENMAGG1S NM219S	Solar	7/1/2024	7/1/2024	7/31/2024	NM	N/A	2	15533-NM-07-2024-362E0692-1 to 2
NM RPS Active	9aa7ddf2-4ffc	W15702	N/A	EPENMAGG1S NM220S	Solar	7/1/2024	7/1/2024	7/31/2024	NM	N/A	2	15702-NM-07-2024-8A09704D-1 to 2
NM RPS Active	9aa7ddf2-4ffc	W15703	N/A	EPENMAGG1S NM221S	Solar	7/1/2024	7/1/2024	7/31/2024	NM	N/A	8	15703-NM-07-2024-E0AB5FD5-1 to 8
NM RPS Active	9aa7ddf2-4ffc	W15704	N/A	EPENMAGG1S NM222S	Solar	7/1/2024	7/1/2024	7/31/2024	NM	N/A	2	15704-NM-07-2024-6B0EF2FF-1 to 2
NM RPS Active	9aa7ddf2-4ffc	W15705	N/A	EPENMAGG1S NM223S	Solar	7/1/2024	7/1/2024	7/31/2024	NM	N/A	6	15705-NM-07-2024-43F70D11-1 to 6
NM RPS Active	9aa7ddf2-4ffc	W16065	N/A	EPENMAGG1S NM224S	Solar	7/1/2024	7/1/2024	7/31/2024	NM	N/A	2	16065-NM-07-2024-AB96E2D1-1 to 2
NM RPS Active	9aa7ddf2-4ffc	W16066	N/A	EPENMAGG1S NM225S	Solar	7/1/2024	7/1/2024	7/31/2024	NM	N/A	1	16066-NM-07-2024-64AAAA83-1 to 1
NM RPS Active	9aa7ddf2-4ffc	W16490	N/A	EPENMAGG1S NM227S	Solar	7/1/2024	7/1/2024	7/31/2024	NM	N/A	4	16490-NM-07-2024-63AAD3B9-1 to 4
NM RPS Active	9aa7ddf2-4ffc	W16492	N/A	EPENMAGG1S NM229S	Solar	7/1/2024	7/1/2024	7/31/2024	NM	N/A	2	16492-NM-07-2024-DE26D39E-1 to 2
NM RPS Active	9aa7ddf2-4ffc	W16493	N/A	EPENMAGG1S NM230S	Solar	7/1/2024	7/1/2024	7/31/2024	NM	N/A	2	16493-NM-07-2024-5C043D01-1 to 2
NM RPS Active	9aa7ddf2-4ffc	W16494	N/A	EPENMAGG1S NM231S	Solar	7/1/2024	7/1/2024	7/31/2024	NM	N/A	3	16494-NM-07-2024-F54348A1-1 to 3
NM RPS Active	9aa7ddf2-4ffc	W17425	N/A	EPENMAGG1S NM232S	Solar	7/1/2024	7/1/2024	7/31/2024	NM	N/A	2	17425-NM-07-2024-4638396A-1 to 2
NM RPS Active	9aa7ddf2-4ffc	W17426	N/A	EPENMAGG1S NM233S	Solar	7/1/2024	7/1/2024	7/31/2024	NM	N/A	2	17426-NM-07-2024-2FA4CCF3-1 to 2
NM RPS Active	9aa7ddf2-4ffc	W17427	N/A	EPENMAGG1S NM235S	Solar	7/1/2024	7/1/2024	7/31/2024	NM	N/A	2	17427-NM-07-2024-E9E93D2D-1 to 2
NM RPS Active	9aa7ddf2-4ffc	W17428	N/A	EPENMAGG1S NM236S	Solar	7/1/2024	7/1/2024	7/31/2024	NM	N/A	2	17428-NM-07-2024-9D2959E3-1 to 2
NM RPS Active	9aa7ddf2-4ffc	W17429	N/A	EPENMAGG1S NM237S	Solar	7/1/2024	7/1/2024	7/31/2024	NM	N/A	5	17429-NM-07-2024-176E0152-1 to 5
NM RPS Active	9aa7ddf2-4ffc	W17430	N/A	EPENMAGG1S NM238S	Solar	7/1/2024	7/1/2024	7/31/2024	NM	N/A	1	17430-NM-07-2024-FDC17274-1 to 1
NM RPS Active	9aa7ddf2-4ffc	W17431	N/A	EPENMAGG1S NM239S	Solar	7/1/2024	7/1/2024	7/31/2024	NM	N/A	5	17431-NM-07-2024-288A4B9F-1 to 5
NM RPS Active	9aa7ddf2-4ffc	W17432	N/A	EPENMAGG1S NM240S	Solar	7/1/2024	7/1/2024	7/31/2024	NM	N/A	2	17432-NM-07-2024-A20D312D-1 to 2
NM RPS Active	9aa7ddf2-4ffc	W17433	N/A	EPENMAGG1S NM241S	Solar	7/1/2024	7/1/2024	7/31/2024	NM	N/A	3	17433-NM-07-2024-B7F480A7-1 to 3
NM RPS Active	9aa7ddf2-4ffc	W17435	N/A	EPENMAGG1S NM243S	Solar	7/1/2024	7/1/2024	7/31/2024	NM	N/A	1	17435-NM-07-2024-8D085DB2-1 to 1
NM RPS Active	9aa7ddf2-4ffc	W17436	N/A	EPENMAGG1S NM244S	Solar	7/1/2024	7/1/2024	7/31/2024	NM	N/A	2	17436-NM-07-2024-A67DF5E8-1 to 2
NM RPS Active	9aa7ddf2-4ffc	W17546	N/A	EPENMAGG1S NM245S	Solar	7/1/2024	7/1/2024	7/31/2024	NM	N/A	4	17546-NM-07-2024-47B8AD09-1 to 4
NM RPS Active	9aa7ddf2-4ffc	W17824	N/A	EPENMAGG1S NM246S	Solar	7/1/2024	7/1/2024	7/31/2024	NM	N/A	2	17824-NM-07-2024-562B3C84-1 to 2
NM RPS Active	9aa7ddf2-4ffc	W17825	N/A	EPENMAGG1S NM247S	Solar	7/1/2024	7/1/2024	7/31/2024	NM	N/A	1	17825-NM-07-2024-44FD117B-1 to 1
NM RPS Active	9aa7ddf2-4ffc	W18165	N/A	EPENMAGG1S NM248S	Solar	7/1/2024	7/1/2024	7/31/2024	NM	N/A	5	18165-NM-07-2024-ACF5E499-1 to 5
NM RPS Active	9aa7ddf2-4ffc	W18166	N/A	EPENMAGG1S NM249S	Solar	7/1/2024	7/1/2024	7/31/2024	NM	N/A	6	18166-NM-07-2024-9D75A64D-1 to 6
NM RPS Active	9aa7ddf2-4ffc	W18167	N/A	EPENMAGG1S NM250S	Solar	7/1/2024	7/1/2024	7/31/2024	NM	N/A	2	18167-NM-07-2024-E8A63F58-1 to 2

Account	Account ID	WREGIS GU ID	Unit Name	Facility Name	Fuel Type	Vintage	Generation Start Date	Generation End Date	Generator Location	Eligility	Quantity (RECs)	Serial Numbers
NM RPS Active	9aa7ddf2-4ffc	W18279	N/A	EPENMAGG1S NM251S	Solar	7/1/2024	7/1/2024	7/31/2024	NM	N/A	4	18279-NM-07-2024-9888F479-1 to 4
NM RPS Active	9aa7ddf2-4ffc	W18280	N/A	EPENMAGG1S NM252S	Solar	7/1/2024	7/1/2024	7/31/2024	NM	N/A	10	18280-NM-07-2024-89AD0E25-1 to 10
NM RPS Active	9aa7ddf2-4ffc	W18547	N/A	EPENMAGG1S NM253S	Solar	7/1/2024	7/1/2024	7/31/2024	NM	N/A	7	18547-NM-07-2024-DCEC5420-1 to 7
NM RPS Active	9aa7ddf2-4ffc	W18548	N/A	EPENMAGG1S NM254S	Solar	7/1/2024	7/1/2024	7/31/2024	NM	N/A	6	18548-NM-07-2024-97F8B45E-1 to 6
NM RPS Active	9aa7ddf2-4ffc	W18750	N/A	EPENMAGG1S NM255S	Solar	7/1/2024	7/1/2024	7/31/2024	NM	N/A	5	18750-NM-07-2024-250CBC52-1 to 5
NM RPS Active	9aa7ddf2-4ffc	W19059	N/A	EPENMAGG1S NM256S	Solar	7/1/2024	7/1/2024	7/31/2024	NM	N/A	3	19059-NM-07-2024-0C6AD5A5-1 to 3
NM RPS Active	9aa7ddf2-4ffc	W12647	EPE NM174S - City of Las Cruces - Water Treatment Facilities	EPE NM174S	Solar	8/1/2024	8/1/2024	8/31/2024	NM	N/A	4	12647-NM-08-2024-16B423F5-1 to 4
NM RPS Active	9aa7ddf2-4ffc	W12647	EPE NM174S - City of Las Cruces - Water Treatment Facilities	EPE NM174S	Solar	8/1/2024	8/1/2024	8/31/2024	NM	N/A	9	12647-NM-08-2024-9277E4E8-1 to 9
NM RPS Active	9aa7ddf2-4ffc	W12650	EPE NM175S - City of Las Cruces - Utilities - Waste Water	EPE NM175S	Solar	8/1/2024	8/1/2024	8/31/2024	NM	N/A	8	12650-NM-08-2024-46A24475-1 to 8
NM RPS Active	9aa7ddf2-4ffc	W3622	EPENMAGG1S NM001S	EPENMAGG1S NM001S	Solar	8/1/2024	8/1/2024	8/31/2024	NM	N/A	3	3622-NM-08-2024-DC0C4EE2-1 to 3
NM RPS Active	9aa7ddf2-4ffc	W3624	EPENMAGG1S NM002S	EPENMAGG1S NM002S	Solar	8/1/2024	8/1/2024	8/31/2024	NM	N/A	2	3624-NM-08-2024-8CB65C9E-1 to 2
NM RPS Active	9aa7ddf2-4ffc	W3637	EPENMAGG1S NM003S	EPENMAGG1S NM003S	Solar	8/1/2024	8/1/2024	8/31/2024	NM	N/A	2	3637-NM-08-2024-C27AACAE-1 to 2
NM RPS Active	9aa7ddf2-4ffc	W3638	EPENMAGG1S NM004S	EPENMAGG1S NM004S	Solar	8/1/2024	8/1/2024	8/31/2024	NM	N/A	1	3638-NM-08-2024-B45B8EE3-1 to 1
NM RPS Active	9aa7ddf2-4ffc	W3639	EPENMAGG1s NM005S	EPENMAGG1s NM005S	Solar	8/1/2024	8/1/2024	8/31/2024	NM	N/A	1	3639-NM-08-2024-E747A53E-1 to 1
NM RPS Active	9aa7ddf2-4ffc	W3641	EPENMAGG1s NM007S	EPENMAGG1s NM007S	Solar	8/1/2024	8/1/2024	8/31/2024	NM	N/A	1	3641-NM-08-2024-ED8EA2B3-1 to 1
NM RPS Active	9aa7ddf2-4ffc	W3642	EPENMAGG1s NM008S	EPENMAGG1s NM008S	Solar	8/1/2024	8/1/2024	8/31/2024	NM	N/A	1	3642-NM-08-2024-12C3184E-1 to 1
NM RPS Active	9aa7ddf2-4ffc	W3646	EPENMAGG1S NM012S	EPENMAGG1S NM012S	Solar	8/1/2024	8/1/2024	8/31/2024	NM	N/A	1	3646-NM-08-2024-977F2150-1 to 1
NM RPS Active	9aa7ddf2-4ffc	W3646	EPENMAGG1S NM012S	EPENMAGG1S NM012S	Solar	8/1/2024	8/1/2024	8/31/2024	NM	N/A	1	3646-NM-08-2024-3EE20EB4-1 to 1
NM RPS Active	9aa7ddf2-4ffc	W3647	EPENMAGG1S NM013S	EPENMAGG1S NM013S	Solar	8/1/2024	8/1/2024	8/31/2024	NM	N/A	2	3647-NM-08-2024-70B86C54-1 to 2
NM RPS Active	9aa7ddf2-4ffc	W3650	EPENMAGG1S NM016S	EPENMAGG1S NM016S	Solar	8/1/2024	8/1/2024	8/31/2024	NM	N/A	1	3650-NM-08-2024-E4344096-1 to 1
NM RPS Active	9aa7ddf2-4ffc	W3651	EPENMAGG1S NM017S	EPENMAGG1S NM017S	Solar	8/1/2024	8/1/2024	8/31/2024	NM	N/A	1	3651-NM-08-2024-73F9703E-1 to 1
NM RPS Active	9aa7ddf2-4ffc	W3652	EPENMAGG1S NM018S	EPENMAGG1S NM018S	Solar	8/1/2024	8/1/2024	8/31/2024	NM	N/A	2	3652-NM-08-2024-0D1561BC-1 to 2
NM RPS Active	9aa7ddf2-4ffc	W3653	EPENMAGG1S NM019S	EPENMAGG1S NM019S	Solar	8/1/2024	8/1/2024	8/31/2024	NM	N/A	4	3653-NM-08-2024-21ACC317-1 to 4
NM RPS Active	9aa7ddf2-4ffc	W3654	EPENMAGG1S NM020S	EPENMAGG1S NM020S	Solar	8/1/2024	8/1/2024	8/31/2024	NM	N/A	2	3654-NM-08-2024-3D7719F4-1 to 2
NM RPS Active	9aa7ddf2-4ffc	W3654	EPENMAGG1S NM020S	EPENMAGG1S NM020S	Solar	8/1/2024	8/1/2024	8/31/2024	NM	N/A	1	3654-NM-08-2024-5DF319AC-1 to 1
NM RPS Active	9aa7ddf2-4ffc	W3655	EPENMAGG1S NM021S	EPENMAGG1S NM021S	Solar	8/1/2024	8/1/2024	8/31/2024	NM	N/A	5	3655-NM-08-2024-B8E801B4-1 to 5
NM RPS Active	9aa7ddf2-4ffc	W3656	EPENMAGG1S NM022S	EPENMAGG1S NM022S	Solar	8/1/2024	8/1/2024	8/31/2024	NM	N/A	3	3656-NM-08-2024-852AE3D2-1 to 3
NM RPS Active	9aa7ddf2-4ffc	W3657	EPENMAGG1S NM023S	EPENMAGG1S NM023S	Solar	8/1/2024	8/1/2024	8/31/2024	NM	N/A	6	3657-NM-08-2024-DD81EF21-1 to 6
NM RPS Active	9aa7ddf2-4ffc	W3658	EPENMAGG1S NM024S	EPENMAGG1S NM024S	Solar	8/1/2024	8/1/2024	8/31/2024	NM	N/A	3	3658-NM-08-2024-98DD0964-1 to 3
NM RPS Active	9aa7ddf2-4ffc	W3659	EPENMAGG1S NM025S	EPENMAGG1S NM025S	Solar	8/1/2024	8/1/2024	8/31/2024	NM	N/A	2	3659-NM-08-2024-B5E601DF-1 to 2
NM RPS Active	9aa7ddf2-4ffc	W3660	EPENMAGG1S NM026S	EPENMAGG1S NM026S	Solar	8/1/2024	8/1/2024	8/31/2024	NM	N/A	2	3660-NM-08-2024-96EDBFA9-1 to 2
NM RPS Active	9aa7ddf2-4ffc	W3660	EPENMAGG1S NM026S	EPENMAGG1S NM026S	Solar	8/1/2024	8/1/2024	8/31/2024	NM	N/A	1	3660-NM-08-2024-A408609E-1 to 1
NM RPS Active	9aa7ddf2-4ffc	W3838	EPENMAGG1S NM027S	EPENMAGG1S NM027S	Solar	8/1/2024	8/1/2024	8/31/2024	NM	N/A	4	3838-NM-08-2024-E99833DE-1 to 4
NM RPS Active	9aa7ddf2-4ffc	W3839	EPENMAGG1S NM028S	EPENMAGG1S NM028S	Solar	8/1/2024	8/1/2024	8/31/2024	NM	N/A	1	3839-NM-08-2024-A2363E89-1 to 1
NM RPS Active	9aa7ddf2-4ffc	W3839	EPENMAGG1S NM028S	EPENMAGG1S NM028S	Solar	8/1/2024	8/1/2024	8/31/2024	NM	N/A	1	3839-NM-08-2024-6A83D911-1 to 1
NM RPS Active	9aa7ddf2-4ffc	W3946	EPENMAGG1S NM029S	EPENMAGG1S NM029S	Solar	8/1/2024	8/1/2024	8/31/2024	NM	N/A	1	3946-NM-08-2024-5457303C-1 to 1
NM RPS Active	9aa7ddf2-4ffc	W3947	EPENMAGG1S NM030S	EPENMAGG1S NM030S	Solar	8/1/2024	8/1/2024	8/31/2024	NM	N/A	2	3947-NM-08-2024-987DA471-1 to 2
NM RPS Active	9aa7ddf2-4ffc	W3948	EPENMAGG1S NM031S	EPENMAGG1S NM031S	Solar	8/1/2024	8/1/2024	8/31/2024	NM	N/A	1	3948-NM-08-2024-9502DA47-1 to 1
NM RPS Active	9aa7ddf2-4ffc	W3949	EPENMAGG1S NM032S	EPENMAGG1S NM032S	Solar	8/1/2024	8/1/2024	8/31/2024	NM	N/A	2	3949-NM-08-2024-AFCDADF6-1 to 2
NM RPS Active	9aa7ddf2-4ffc	W3950	EPENMAGG1S NM033S	EPENMAGG1S NM033S	Solar	8/1/2024	8/1/2024	8/31/2024	NM	N/A	1	3950-NM-08-2024-E8BDF696-1 to 1
NM RPS Active	9aa7ddf2-4ffc	W3951	EPENMAGG1S NM034S	EPENMAGG1S NM034S	Solar	8/1/2024	8/1/2024	8/31/2024	NM	N/A	3	3951-NM-08-2024-0F3CDD98-1 to 3
NM RPS Active	9aa7ddf2-4ffc	W3952	EPENMAGG1S NM035S	EPENMAGG1S NM035S	Solar	8/1/2024	8/1/2024	8/31/2024	NM	N/A	2	3952-NM-08-2024-C52DC64F-1 to 2
NM RPS Active	9aa7ddf2-4ffc	W4101	EPENMAGG1S NM036S	EPENMAGG1S NM036S	Solar	8/1/2024	8/1/2024	8/31/2024	NM	N/A	1	4101-NM-08-2024-3C584C4B-1 to 1
NM RPS Active	9aa7ddf2-4ffc	W4121	EPENMAGG1S NM037S	EPENMAGG1S NM037S	Solar	8/1/2024	8/1/2024	8/31/2024	NM	N/A	1	4121-NM-08-2024-E5A4AAF3-1 to 1
NM RPS Active	9aa7ddf2-4ffc	W4221	EPENMAGG1S NM038S	EPENMAGG1S NM038S	Solar	8/1/2024	8/1/2024	8/31/2024	NM	N/A	3	4221-NM-08-2024-E4479B0B-1 to 3
NM RPS Active	9aa7ddf2-4ffc	W4437	EPENMAGG1S NM042S	EPENMAGG1S NM042S	Solar	8/1/2024	8/1/2024	8/31/2024	NM	N/A	3	4437-NM-08-2024-7350C151-1 to 3
NM RPS Active	9aa7ddf2-4ffc	W4459	EPENMAGG1S NM043S	EPENMAGG1S NM043S	Solar	8/1/2024	8/1/2024	8/31/2024	NM	N/A	5	4459-NM-08-2024-4A375B97-1 to 5
NM RPS Active	9aa7ddf2-4ffc	W4507	EPENMAGG1S NM044S	EPENMAGG1S NM044S	Solar	8/1/2024	8/1/2024	8/31/2024	NM	N/A	1	4507-NM-08-2024-2697598A-1 to 1
NM RPS Active	9aa7ddf2-4ffc	W4649	EPENMAGG1S NM045S	EPENMAGG1S NM045S	Solar	8/1/2024	8/1/2024	8/31/2024	NM	N/A	2	4649-NM-08-2024-189E6DF0-1 to 2
NM RPS Active	9aa7ddf2-4ffc	W4704	EPENMAGG1S NM046S	EPENMAGG1S NM046S	Solar	8/1/2024	8/1/2024	8/31/2024	NM	N/A	3	4704-NM-08-2024-96930CEF-1 to 3
NM RPS Active	9aa7ddf2-4ffc	W4704	EPENMAGG1S NM046S	EPENMAGG1S NM046S	Solar	8/1/2024	8/1/2024	8/31/2024	NM	N/A	2	4704-NM-08-2024-9CD936BC-1 to 2
NM RPS Active	9aa7ddf2-4ffc	W4806	EPENMAGG1S NM048S	EPENMAGG1S NM048S	Solar	8/1/2024	8/1/2024	8/31/2024	NM	N/A	1	4806-NM-08-2024-4C12201D-1 to 1

Account	Account ID	WREGIS GU ID	Unit Name	Facility Name	Fuel Type	Vintage	Generation Start Date	Generation End Date	Generator Location	Eligility	Quantity (RECs)	Serial Numbers
NM RPS Active	9aa7ddf2-4ffc	W4842	EPENMAGG1S NM050S	EPENMAGG1S NM050S	Solar	8/1/2024	8/1/2024	8/31/2024	NM	N/A	1	4842-NM-08-2024-996B95E6-1 to 1
NM RPS Active	9aa7ddf2-4ffc	W4843	EPENMAGG1S NM051S	EPENMAGG1S NM051S	Solar	8/1/2024	8/1/2024	8/31/2024	NM	N/A	3	4843-NM-08-2024-8714E35A-1 to 3
NM RPS Active	9aa7ddf2-4ffc	W5022	EPENMAGG1S NM053S	EPENMAGG1S NM053S	Solar	8/1/2024	8/1/2024	8/31/2024	NM	N/A	4	5022-NM-08-2024-3FCAC7CE-1 to 4
NM RPS Active	9aa7ddf2-4ffc	W5071	EPENMAGG1S NM054S	EPENMAGG1S NM054S	Solar	8/1/2024	8/1/2024	8/31/2024	NM	N/A	1	5071-NM-08-2024-C7E06BFE-1 to 1
NM RPS Active	9aa7ddf2-4ffc	W5080	EPENMAGG1S NM056S	EPENMAGG1S NM056S	Solar	8/1/2024	8/1/2024	8/31/2024	NM	N/A	2	5080-NM-08-2024-1E338FE0-1 to 2
NM RPS Active	9aa7ddf2-4ffc	W5111	EPENMAGG1S NM057S	EPENMAGG1S NM057S	Solar	8/1/2024	8/1/2024	8/31/2024	NM	N/A	1	5111-NM-08-2024-C986C029-1 to 1
NM RPS Active	9aa7ddf2-4ffc	W5112	EPENMAGG1S NM058S	EPENMAGG1S NM058S	Solar	8/1/2024	8/1/2024	8/31/2024	NM	N/A	2	5112-NM-08-2024-84E23BD9-1 to 2
NM RPS Active	9aa7ddf2-4ffc	W5280	EPENMAGG1S NM059S	EPENMAGG1S NM059S	Solar	8/1/2024	8/1/2024	8/31/2024	NM	N/A	2	5280-NM-08-2024-5E29573B-1 to 2
NM RPS Active	9aa7ddf2-4ffc	W5320	EPENMAGG1S NM062S	EPENMAGG1S NM062S	Solar	8/1/2024	8/1/2024	8/31/2024	NM	N/A	1	5320-NM-08-2024-A09676C0-1 to 1
NM RPS Active	9aa7ddf2-4ffc	W5379	EPENMAGG1S NM063S	EPENMAGG1S NM063S	Solar	8/1/2024	8/1/2024	8/31/2024	NM	N/A	2	5379-NM-08-2024-E6679FEF-1 to 2
NM RPS Active	9aa7ddf2-4ffc	W5469	EPENMAGG1S NM064S	EPENMAGG1S NM064S	Solar	8/1/2024	8/1/2024	8/31/2024	NM	N/A	2	5469-NM-08-2024-7EE73DFE-1 to 2
NM RPS Active	9aa7ddf2-4ffc	W5469	EPENMAGG1S NM064S	EPENMAGG1S NM064S	Solar	8/1/2024	8/1/2024	8/31/2024	NM	N/A	1	5469-NM-08-2024-98ACD568-1 to 1
NM RPS Active	9aa7ddf2-4ffc	W5547	EPENMAGG1S NM065S	EPENMAGG1S NM065S	Solar	8/1/2024	8/1/2024	8/31/2024	NM	N/A	1	5547-NM-08-2024-9F5A8EC6-1 to 1
NM RPS Active	9aa7ddf2-4ffc	W5547	EPENMAGG1S NM065S	EPENMAGG1S NM065S	Solar	8/1/2024	8/1/2024	8/31/2024	NM	N/A	1	5547-NM-08-2024-A528A64D-1 to 1
NM RPS Active	9aa7ddf2-4ffc	W5553	EPENMAGG1S NM066S	EPENMAGG1S NM066S	Solar	8/1/2024	8/1/2024	8/31/2024	NM	N/A	1	5553-NM-08-2024-A867E916-1 to 1
NM RPS Active	9aa7ddf2-4ffc	W5652	EPENMAGG1S NM067S	EPENMAGG1S NM067S	Solar	8/1/2024	8/1/2024	8/31/2024	NM	N/A	2	5652-NM-08-2024-4194CD4E-1 to 2
NM RPS Active	9aa7ddf2-4ffc	W5742	EPENMAGG1S NM070S	EPENMAGG1S NM070S	Solar	8/1/2024	8/1/2024	8/31/2024	NM	N/A	1	5742-NM-08-2024-BB157489-1 to 1
NM RPS Active	9aa7ddf2-4ffc	W5742	EPENMAGG1S NM070S	EPENMAGG1S NM070S	Solar	8/1/2024	8/1/2024	8/31/2024	NM	N/A	1	5742-NM-08-2024-BD60ED37-1 to 1
NM RPS Active	9aa7ddf2-4ffc	W5790	EPENMAGG1S NM071S	EPENMAGG1S NM071S	Solar	8/1/2024	8/1/2024	8/31/2024	NM	N/A	1	5790-NM-08-2024-9A5CA848-1 to 1
NM RPS Active	9aa7ddf2-4ffc	W7116	EPENMAGG1S NM074S	EPENMAGG1S NM074S	Solar	8/1/2024	8/1/2024	8/31/2024	NM	N/A	1	7116-NM-08-2024-08663168-1 to 1
NM RPS Active	9aa7ddf2-4ffc	W7117	EPENMAGG1S NM075S	EPENMAGG1S NM075S	Solar	8/1/2024	8/1/2024	8/31/2024	NM	N/A	1	7117-NM-08-2024-B04ACC4F-1 to 1
NM RPS Active	9aa7ddf2-4ffc	W7118	EPENMAGG1S NM076S	EPENMAGG1S NM076S	Solar	8/1/2024	8/1/2024	8/31/2024	NM	N/A	1	7118-NM-08-2024-272FEF55-1 to 1
NM RPS Active	9aa7ddf2-4ffc	W7119	EPENMAGG1S NM077S	EPENMAGG1S NM077S	Solar	8/1/2024	8/1/2024	8/31/2024	NM	N/A	4	7119-NM-08-2024-F76E3C45-1 to 4
NM RPS Active	9aa7ddf2-4ffc	W7120	EPENMAGG1S NM078S	EPENMAGG1S NM078S	Solar	8/1/2024	8/1/2024	8/31/2024	NM	N/A	2	7120-NM-08-2024-0D1E5311-1 to 2
NM RPS Active	9aa7ddf2-4ffc	W7121	EPENMAGG1S NM079S	EPENMAGG1S NM079S	Solar	8/1/2024	8/1/2024	8/31/2024	NM	N/A	1	7121-NM-08-2024-9ED337AA-1 to 1
NM RPS Active	9aa7ddf2-4ffc	W7121	EPENMAGG1S NM079S	EPENMAGG1S NM079S	Solar	8/1/2024	8/1/2024	8/31/2024	NM	N/A	1	7121-NM-08-2024-200866FC-1 to 1
NM RPS Active	9aa7ddf2-4ffc	W7324	EPENMAGG1S NM080S	EPENMAGG1S NM080S	Solar	8/1/2024	8/1/2024	8/31/2024	NM	N/A	1	7324-NM-08-2024-B291A4CC-1 to 1
NM RPS Active	9aa7ddf2-4ffc	W7324	EPENMAGG1S NM080S	EPENMAGG1S NM080S	Solar	8/1/2024	8/1/2024	8/31/2024	NM	N/A	2	7324-NM-08-2024-89A5FDE2-1 to 2
NM RPS Active	9aa7ddf2-4ffc	W7325	EPENMAGG1S NM081S	EPENMAGG1S NM081S	Solar	8/1/2024	8/1/2024	8/31/2024	NM	N/A	3	7325-NM-08-2024-01FE8A20-1 to 3
NM RPS Active	9aa7ddf2-4ffc	W7332	EPENMAGG1S NM082S	EPENMAGG1S NM082S	Solar	8/1/2024	8/1/2024	8/31/2024	NM	N/A	1	7332-NM-08-2024-AB9D2958-1 to 1
NM RPS Active	9aa7ddf2-4ffc	W7333	EPENMAGG1S NM083S	EPENMAGG1S NM083S	Solar	8/1/2024	8/1/2024	8/31/2024	NM	N/A	3	7333-NM-08-2024-52766C33-1 to 3
NM RPS Active	9aa7ddf2-4ffc	W7424	EPENMAGG1S NM084S	EPENMAGG1S NM084S	Solar	8/1/2024	8/1/2024	8/31/2024	NM	N/A	1	7424-NM-08-2024-65912965-1 to 1
NM RPS Active	9aa7ddf2-4ffc	W7425	EPENMAGG1S NM085S	EPENMAGG1S NM085S	Solar	8/1/2024	8/1/2024	8/31/2024	NM	N/A	2	7425-NM-08-2024-CAAAA81B-1 to 2
NM RPS Active	9aa7ddf2-4ffc	W7547	EPENMAGG1S NM086S	EPENMAGG1S NM086S	Solar	8/1/2024	8/1/2024	8/31/2024	NM	N/A	2	7547-NM-08-2024-7DE47CB1-1 to 2
NM RPS Active	9aa7ddf2-4ffc	W7555	EPENMAGG1S NM088S	EPENMAGG1S NM088S	Solar	8/1/2024	8/1/2024	8/31/2024	NM	N/A	1	7555-NM-08-2024-A4FC4905-1 to 1
NM RPS Active	9aa7ddf2-4ffc	W7558	EPENMAGG1S NM091S	EPENMAGG1S NM091S	Solar	8/1/2024	8/1/2024	8/31/2024	NM	N/A	1	7558-NM-08-2024-B02C076E-1 to 1
NM RPS Active	9aa7ddf2-4ffc	W7559	EPENMAGG1S NM092S	EPENMAGG1S NM092S	Solar	8/1/2024	8/1/2024	8/31/2024	NM	N/A	1	7559-NM-08-2024-507551B4-1 to 1
NM RPS Active	9aa7ddf2-4ffc	W7559	EPENMAGG1S NM092S	EPENMAGG1S NM092S	Solar	8/1/2024	8/1/2024	8/31/2024	NM	N/A	1	7559-NM-08-2024-2A9D5FC0-1 to 1
NM RPS Active	9aa7ddf2-4ffc	W7671	EPENMAGG1S NM094S	EPENMAGG1S NM094S	Solar	8/1/2024	8/1/2024	8/31/2024	NM	N/A	1	7671-NM-08-2024-E8AB8AE1-1 to 1
NM RPS Active	9aa7ddf2-4ffc	W7672	EPENMAGG1S NM095S	EPENMAGG1S NM095S	Solar	8/1/2024	8/1/2024	8/31/2024	NM	N/A	4	7672-NM-08-2024-35C1FF67-1 to 4
NM RPS Active	9aa7ddf2-4ffc	W7674	EPENMAGG1S NM097S	EPENMAGG1S NM097S	Solar	8/1/2024	8/1/2024	8/31/2024	NM	N/A	1	7674-NM-08-2024-DC6B404B-1 to 1
NM RPS Active	9aa7ddf2-4ffc	W7699	EPENMAGG1S NM098S	EPENMAGG1S NM098S	Solar	8/1/2024	8/1/2024	8/31/2024	NM	N/A	1	7699-NM-08-2024-354AD2D2-1 to 1
NM RPS Active	9aa7ddf2-4ffc	W7700	EPENMAGG1S NM099S	EPENMAGG1S NM099S	Solar	8/1/2024	8/1/2024	8/31/2024	NM	N/A	1	7700-NM-08-2024-2BA96858-1 to 1
NM RPS Active	9aa7ddf2-4ffc	W8123	EPENMAGG1S NM100S	EPENMAGG1S NM100S	Solar	8/1/2024	8/1/2024	8/31/2024	NM	N/A	1	8123-NM-08-2024-D7D0B24B-1 to 1
NM RPS Active	9aa7ddf2-4ffc	W8124	EPENMAGG1S NM101S	EPENMAGG1S NM101S	Solar	8/1/2024	8/1/2024	8/31/2024	NM	N/A	2	8124-NM-08-2024-32FE1BED-1 to 2
NM RPS Active	9aa7ddf2-4ffc	W8197	EPENMAGG1S NM102S	EPENMAGG1S NM102S	Solar	8/1/2024	8/1/2024	8/31/2024	NM	N/A	1	8197-NM-08-2024-C7B2FBEE-1 to 1
NM RPS Active	9aa7ddf2-4ffc	W8794	EPENMAGG1S NM104S	EPENMAGG1S NM104S	Solar	8/1/2024	8/1/2024	8/31/2024	NM	N/A	2	8794-NM-08-2024-57CAA744-1 to 2
NM RPS Active	9aa7ddf2-4ffc	W8835	EPENMAGG1S NM105S	EPENMAGG1S NM105S	Solar	8/1/2024	8/1/2024	8/31/2024	NM	N/A	4	8835-NM-08-2024-8915BA06-1 to 4
NM RPS Active	9aa7ddf2-4ffc	W8835	EPENMAGG1S NM105S	EPENMAGG1S NM105S	Solar	8/1/2024	8/1/2024	8/31/2024	NM	N/A	1	8835-NM-08-2024-ACC91EBC-1 to 1
NM RPS Active	9aa7ddf2-4ffc	W8836	EPENMAGG1S NM106S	EPENMAGG1S NM106S	Solar	8/1/2024	8/1/2024	8/31/2024	NM	N/A	1	8836-NM-08-2024-F88B2BF3-1 to 1
NM RPS Active	9aa7ddf2-4ffc	W9324	EPENMAGG1S NM107S	EPENMAGG1S NM107S	Solar	8/1/2024	8/1/2024	8/31/2024	NM	N/A	6	9324-NM-08-2024-9198AF1C-1 to 6
NM RPS Active	9aa7ddf2-4ffc	W9345	EPENMAGG1S NM110S	EPENMAGG1S NM110S	Solar	8/1/2024	8/1/2024	8/31/2024	NM	N/A	2	9345-NM-08-2024-E35BF377-1 to 2
NM RPS Active	9aa7ddf2-4ffc	W9602	EPENMAGG1S NM111S	EPENMAGG1S NM111S	Solar	8/1/2024	8/1/2024	8/31/2024	NM	N/A	2	9602-NM-08-2024-66292DB2-1 to 2
NM RPS Active	9aa7ddf2-4ffc	W9603	EPENMAGG1S NM112S	EPENMAGG1S NM112S	Solar	8/1/2024	8/1/2024	8/31/2024	NM	N/A	1	9603-NM-08-2024-D9B73879-1 to 1
NM RPS Active	9aa7ddf2-4ffc	W10025	EPENMAGG1S NM113S	EPENMAGG1S NM113S	Solar	8/1/2024	8/1/2024	8/31/2024	NM	N/A	10	10025-NM-08-2024-B767FCCE-1 to 10
NM RPS Active	9aa7ddf2-4ffc	W10026	EPENMAGG1S NM114S	EPENMAGG1S NM114S	Solar	8/1/2024	8/1/2024	8/31/2024	NM	N/A	3	10026-NM-08-2024-BC525D86-1 to 3
NM RPS Active	9aa7ddf2-4ffc	W10026	EPENMAGG1S NM114S	EPENMAGG1S NM114S	Solar	8/1/2024	8/1/2024	8/31/2024	NM	N/A	1	10026-NM-08-2024-70963BFC-1 to 1
NM RPS Active	9aa7ddf2-4ffc	W10027	EPENMAGG1S NM115S	EPENMAGG1S NM115S	Solar	8/1/2024	8/1/2024	8/31/2024	NM	N/A	1	10027-NM-08-2024-419CF2F5-1 to 1

Account	Account ID	WREGIS GU ID	Unit Name	Facility Name	Fuel Type	Vintage	Generation Start Date	Generation End Date	Generator Location	Eligility	Quantity (RECs)	Serial Numbers
NM RPS Active	9aa7ddf2-4ffc	W10105	EPENMAGG1S NM116S	EPENMAGG1S NM116S	Solar	8/1/2024	8/1/2024	8/31/2024	NM	N/A	1	10105-NM-08-2024-5BFD4BC4-1 to 1
NM RPS Active	9aa7ddf2-4ffc	W10106	EPENMAGG1S NM117S	EPENMAGG1S NM117S	Solar	8/1/2024	8/1/2024	8/31/2024	NM	N/A	1	10106-NM-08-2024-E541F2F7-1 to 1
NM RPS Active	9aa7ddf2-4ffc	W10107	EPENMAGG1S NM118S	EPENMAGG1S NM118S	Solar	8/1/2024	8/1/2024	8/31/2024	NM	N/A	2	10107-NM-08-2024-2C9300C2-1 to 2
NM RPS Active	9aa7ddf2-4ffc	W10167	EPENMAGG1S NM119S	EPENMAGG1S NM119S	Solar	8/1/2024	8/1/2024	8/31/2024	NM	N/A	2	10167-NM-08-2024-9E3A7594-1 to 2
NM RPS Active	9aa7ddf2-4ffc	W10460	EPENMAGG1S NM121S	EPENMAGG1S NM121S	Solar	8/1/2024	8/1/2024	8/31/2024	NM	N/A	1	10460-NM-08-2024-3538BE03-1 to 1
NM RPS Active	9aa7ddf2-4ffc	W10461	EPENMAGG1S NM122S	EPENMAGG1S NM122S	Solar	8/1/2024	8/1/2024	8/31/2024	NM	N/A	3	10461-NM-08-2024-CD1563EE-1 to 3
NM RPS Active	9aa7ddf2-4ffc	W10695	EPENMAGG1S NM124S	EPENMAGG1S NM124S	Solar	8/1/2024	8/1/2024	8/31/2024	NM	N/A	2	10695-NM-08-2024-764309B8-1 to 2
NM RPS Active	9aa7ddf2-4ffc	W10695	EPENMAGG1S NM124S	EPENMAGG1S NM124S	Solar	8/1/2024	8/1/2024	8/31/2024	NM	N/A	2	10695-NM-08-2024-AD22AA88-1 to 2
NM RPS Active	9aa7ddf2-4ffc	W10820	EPENMAGG1S NM126S	EPENMAGG1S NM126S	Solar	8/1/2024	8/1/2024	8/31/2024	NM	N/A	3	10820-NM-08-2024-2372C467-1 to 3
NM RPS Active	9aa7ddf2-4ffc	W10821	EPENMAGG1S NM127S	EPENMAGG1S NM127S	Solar	8/1/2024	8/1/2024	8/31/2024	NM	N/A	1	10821-NM-08-2024-15E328DD-1 to 1
NM RPS Active	9aa7ddf2-4ffc	W10867	EPENMAGG1S NM128S	EPENMAGG1S NM128S	Solar	8/1/2024	8/1/2024	8/31/2024	NM	N/A	2	10867-NM-08-2024-044CEEC4-1 to 2
NM RPS Active	9aa7ddf2-4ffc	W10868	EPENMAGG1S NM129S	EPENMAGG1S NM129S	Solar	8/1/2024	8/1/2024	8/31/2024	NM	N/A	1	10868-NM-08-2024-156B8EAF-1 to 1
NM RPS Active	9aa7ddf2-4ffc	W11361	EPENMAGG1S NM133S	EPENMAGG1S NM133S	Solar	8/1/2024	8/1/2024	8/31/2024	NM	N/A	1	11361-NM-08-2024-60C26883-1 to 1
NM RPS Active	9aa7ddf2-4ffc	W11363	EPENMAGG1S NM135S	EPENMAGG1S NM135S	Solar	8/1/2024	8/1/2024	8/31/2024	NM	N/A	1	11363-NM-08-2024-51A0A1BE-1 to 1
NM RPS Active	9aa7ddf2-4ffc	W11374	EPENMAGG1S NM136S	EPENMAGG1S NM136S	Solar	8/1/2024	8/1/2024	8/31/2024	NM	N/A	2	11374-NM-08-2024-2D9A38D4-1 to 2
NM RPS Active	9aa7ddf2-4ffc	W11375	EPENMAGG1S NM137S	EPENMAGG1S NM137S	Solar	8/1/2024	8/1/2024	8/31/2024	NM	N/A	2	11375-NM-08-2024-757D25E7-1 to 2
NM RPS Active	9aa7ddf2-4ffc	W11377	EPENMAGG1S NM138S	EPENMAGG1S NM138S	Solar	8/1/2024	8/1/2024	8/31/2024	NM	N/A	1	11377-NM-08-2024-74C2EC6D-1 to 1
NM RPS Active	9aa7ddf2-4ffc	W11378	EPENMAGG1S NM139S	EPENMAGG1S NM139S	Solar	8/1/2024	8/1/2024	8/31/2024	NM	N/A	2	11378-NM-08-2024-315BFBC1-1 to 2
NM RPS Active	9aa7ddf2-4ffc	W11379	EPENMAGG1S NM140S	EPENMAGG1S NM140S	Solar	8/1/2024	8/1/2024	8/31/2024	NM	N/A	4	11379-NM-08-2024-9FCE1DF5-1 to 4
NM RPS Active	9aa7ddf2-4ffc	W11379	EPENMAGG1S NM140S	EPENMAGG1S NM140S	Solar	8/1/2024	8/1/2024	8/31/2024	NM	N/A	1	11379-NM-08-2024-FC9173EA-1 to 1
NM RPS Active	9aa7ddf2-4ffc	W11381	EPENMAGG1S NM141S	EPENMAGG1S NM141S	Solar	8/1/2024	8/1/2024	8/31/2024	NM	N/A	2	11381-NM-08-2024-101F69F6-1 to 2
NM RPS Active	9aa7ddf2-4ffc	W11381	EPENMAGG1S NM141S	EPENMAGG1S NM141S	Solar	8/1/2024	8/1/2024	8/31/2024	NM	N/A	1	11381-NM-08-2024-7C4F7751-1 to 1
NM RPS Active	9aa7ddf2-4ffc	W11382	EPENMAGG1S NM142S	EPENMAGG1S NM142S	Solar	8/1/2024	8/1/2024	8/31/2024	NM	N/A	3	11382-NM-08-2024-F8AB1C7D-1 to 3
NM RPS Active	9aa7ddf2-4ffc	W11383	EPENMAGG1S NM143S	EPENMAGG1S NM143S	Solar	8/1/2024	8/1/2024	8/31/2024	NM	N/A	1	11383-NM-08-2024-E4C323C4-1 to 1
NM RPS Active	9aa7ddf2-4ffc	W11383	EPENMAGG1S NM143S	EPENMAGG1S NM143S	Solar	8/1/2024	8/1/2024	8/31/2024	NM	N/A	1	11383-NM-08-2024-1C90D949-1 to 1
NM RPS Active	9aa7ddf2-4ffc	W11384	EPENMAGG1S NM144S	EPENMAGG1S NM144S	Solar	8/1/2024	8/1/2024	8/31/2024	NM	N/A	2	11384-NM-08-2024-15FBCA35-1 to 2
NM RPS Active	9aa7ddf2-4ffc	W11968	EPENMAGG1S NM145S	EPENMAGG1S NM145S	Solar	8/1/2024	8/1/2024	8/31/2024	NM	N/A	3	11968-NM-08-2024-A672A4DB-1 to 3
NM RPS Active	9aa7ddf2-4ffc	W11969	EPENMAGG1S NM146S	EPENMAGG1S NM146S	Solar	8/1/2024	8/1/2024	8/31/2024	NM	N/A	3	11969-NM-08-2024-C966E71B-1 to 3
NM RPS Active	9aa7ddf2-4ffc	W11970	EPENMAGG1S NM147S	EPENMAGG1S NM147S	Solar	8/1/2024	8/1/2024	8/31/2024	NM	N/A	2	11970-NM-08-2024-CE66D0DA-1 to 2
NM RPS Active	9aa7ddf2-4ffc	W11970	EPENMAGG1S NM147S	EPENMAGG1S NM147S	Solar	8/1/2024	8/1/2024	8/31/2024	NM	N/A	1	11970-NM-08-2024-AC0100B3-1 to 1
NM RPS Active	9aa7ddf2-4ffc	W11972	EPENMAGG1S NM149S	EPENMAGG1S NM149S	Solar	8/1/2024	8/1/2024	8/31/2024	NM	N/A	3	11972-NM-08-2024-859401D0-1 to 3
NM RPS Active	9aa7ddf2-4ffc	W11973	EPENMAGG1S NM150S	EPENMAGG1S NM150S	Solar	8/1/2024	8/1/2024	8/31/2024	NM	N/A	3	11973-NM-08-2024-902DE8CD-1 to 3
NM RPS Active	9aa7ddf2-4ffc	W11974	EPENMAGG1S NM151S	EPENMAGG1S NM151S	Solar	8/1/2024	8/1/2024	8/31/2024	NM	N/A	2	11974-NM-08-2024-7506C5FB-1 to 2
NM RPS Active	9aa7ddf2-4ffc	W11975	EPENMAGG1S NM152S	EPENMAGG1S NM152S	Solar	8/1/2024	8/1/2024	8/31/2024	NM	N/A	3	11975-NM-08-2024-1B75A79E-1 to 3
NM RPS Active	9aa7ddf2-4ffc	W11976	EPENMAGG1S NM153S	EPENMAGG1S NM153S	Solar	8/1/2024	8/1/2024	8/31/2024	NM	N/A	3	11976-NM-08-2024-967D8D3E-1 to 3
NM RPS Active	9aa7ddf2-4ffc	W11977	EPENMAGG1S NM154S	EPENMAGG1S NM154S	Solar	8/1/2024	8/1/2024	8/31/2024	NM	N/A	3	11977-NM-08-2024-A969FD55-1 to 3
NM RPS Active	9aa7ddf2-4ffc	W11980	EPENMAGG1S NM156S	EPENMAGG1S NM156S	Solar	8/1/2024	8/1/2024	8/31/2024	NM	N/A	1	11980-NM-08-2024-E36872CF-1 to 1
NM RPS Active	9aa7ddf2-4ffc	W11980	EPENMAGG1S NM156S	EPENMAGG1S NM156S	Solar	8/1/2024	8/1/2024	8/31/2024	NM	N/A	2	11980-NM-08-2024-282044CB-1 to 2
NM RPS Active	9aa7ddf2-4ffc	W11981	EPENMAGG1S NM157S	EPENMAGG1S NM157S	Solar	8/1/2024	8/1/2024	8/31/2024	NM	N/A	1	11981-NM-08-2024-034DCD74-1 to 1
NM RPS Active	9aa7ddf2-4ffc	W11982	EPENMAGG1S NM158S	EPENMAGG1S NM158S	Solar	8/1/2024	8/1/2024	8/31/2024	NM	N/A	1	11982-NM-08-2024-506455A4-1 to 1
NM RPS Active	9aa7ddf2-4ffc	W11984	EPENMAGG1S NM159S	EPENMAGG1S NM159S	Solar	8/1/2024	8/1/2024	8/31/2024	NM	N/A	1	11984-NM-08-2024-6D1ACAA6-1 to 1
NM RPS Active	9aa7ddf2-4ffc	W11984	EPENMAGG1S NM159S	EPENMAGG1S NM159S	Solar	8/1/2024	8/1/2024	8/31/2024	NM	N/A	1	11984-NM-08-2024-0B71DD2C-1 to 1
NM RPS Active	9aa7ddf2-4ffc	W12098	EPENMAGG1S NM160S	EPENMAGG1S NM160S	Solar	8/1/2024	8/1/2024	8/31/2024	NM	N/A	1	12098-NM-08-2024-D1E3B85F-1 to 1
NM RPS Active	9aa7ddf2-4ffc	W12099	EPENMAGG1S NM161S	EPENMAGG1S NM161S	Solar	8/1/2024	8/1/2024	8/31/2024	NM	N/A	1	12099-NM-08-2024-42CE03C5-1 to 1
NM RPS Active	9aa7ddf2-4ffc	W12100	EPENMAGG1S NM162S	EPENMAGG1S NM162S	Solar	8/1/2024	8/1/2024	8/31/2024	NM	N/A	1	12100-NM-08-2024-9FA17117-1 to 1
NM RPS Active	9aa7ddf2-4ffc	W12100	EPENMAGG1S NM162S	EPENMAGG1S NM162S	Solar	8/1/2024	8/1/2024	8/31/2024	NM	N/A	1	12100-NM-08-2024-7A71698C-1 to 1
NM RPS Active	9aa7ddf2-4ffc	W12101	EPENMAGG1S NM163S	EPENMAGG1S NM163S	Solar	8/1/2024	8/1/2024	8/31/2024	NM	N/A	2	12101-NM-08-2024-117DE5DB-1 to 2
NM RPS Active	9aa7ddf2-4ffc	W12188	EPENMAGG1S NM164S	EPENMAGG1S NM164S	Solar	8/1/2024	8/1/2024	8/31/2024	NM	N/A	2	12188-NM-08-2024-CB2BE17B-1 to 2
NM RPS Active	9aa7ddf2-4ffc	W12260	EPENMAGG1S NM168S	EPENMAGG1S NM168S	Solar	8/1/2024	8/1/2024	8/31/2024	NM	N/A	1	12260-NM-08-2024-6737DBA8-1 to 1
NM RPS Active	9aa7ddf2-4ffc	W12643	EPENMAGG1S NM170S	EPENMAGG1S NM170S	Solar	8/1/2024	8/1/2024	8/31/2024	NM	N/A	5	12643-NM-08-2024-C553C803-1 to 5
NM RPS Active	9aa7ddf2-4ffc	W12646	EPENMAGG1S NM173S	EPENMAGG1S NM173S	Solar	8/1/2024	8/1/2024	8/31/2024	NM	N/A	4	12646-NM-08-2024-FD6A70FD-1 to 4
NM RPS Active	9aa7ddf2-4ffc	W12702	EPENMAGG1S NM177S	EPENMAGG1S NM177S	Solar	8/1/2024	8/1/2024	8/31/2024	NM	N/A	2	12702-NM-08-2024-EEE3FFC8-1 to 2
NM RPS Active	9aa7ddf2-4ffc	W12702	EPENMAGG1S NM177S	EPENMAGG1S NM177S	Solar	8/1/2024	8/1/2024	8/31/2024	NM	N/A	7	12702-NM-08-2024-19CD170C-1 to 7
NM RPS Active	9aa7ddf2-4ffc	W12703	EPENMAGG1S NM178S	EPENMAGG1S NM178S	Solar	8/1/2024	8/1/2024	8/31/2024	NM	N/A	3	12703-NM-08-2024-D5E60EAC-1 to 3
NM RPS Active	9aa7ddf2-4ffc	W12703	EPENMAGG1S NM178S	EPENMAGG1S NM178S	Solar	8/1/2024	8/1/2024	8/31/2024	NM	N/A	1	12703-NM-08-2024-E9FA035A-1 to 1
NM RPS Active	9aa7ddf2-4ffc	W12704	EPENMAGG1S NM179S	EPENMAGG1S NM179S	Solar	8/1/2024	8/1/2024	8/31/2024	NM	N/A	2	12704-NM-08-2024-5AEADB95-1 to 2
NM RPS Active	9aa7ddf2-4ffc	W12744	EPENMAGG1S NM180S	EPENMAGG1S NM180S	Solar	8/1/2024	8/1/2024	8/31/2024	NM	N/A	2	12744-NM-08-2024-34EBD584-1 to 2
NM RPS Active	9aa7ddf2-4ffc	W12745	EPENMAGG1S NM181S	EPENMAGG1S NM181S	Solar	8/1/2024	8/1/2024	8/31/2024	NM	N/A	1	12745-NM-08-2024-952BD441-1 to 1

Account	Account ID	WREGIS GU ID	Unit Name	Facility Name	Fuel Type	Vintage	Generation Start Date	Generation End Date	Generator Location	Eligility	Quantity (RECs)	Serial Numbers
NM RPS Active	9aa7ddf2-4ffc	W13207	EPENMAGG1S NM182S	EPENMAGG1S NM182S	Solar	8/1/2024	8/1/2024	8/31/2024	NM	N/A	1	13207-NM-08-2024-CB0A78A0-1 to 1
NM RPS Active	9aa7ddf2-4ffc	W13207	EPENMAGG1S NM182S	EPENMAGG1S NM182S	Solar	8/1/2024	8/1/2024	8/31/2024	NM	N/A	1	13207-NM-08-2024-35507664-1 to 1
NM RPS Active	9aa7ddf2-4ffc	W13208	EPENMAGG1S NM183S	EPENMAGG1S NM183S	Solar	8/1/2024	8/1/2024	8/31/2024	NM	N/A	3	13208-NM-08-2024-8A30A41B-1 to 3
NM RPS Active	9aa7ddf2-4ffc	W13211	EPENMAGG1S NM185S	EPENMAGG1S NM185S	Solar	8/1/2024	8/1/2024	8/31/2024	NM	N/A	3	13211-NM-08-2024-DCE6D929-1 to 3
NM RPS Active	9aa7ddf2-4ffc	W13615	EPENMAGG1S NM186S	EPENMAGG1S NM186S	Solar	8/1/2024	8/1/2024	8/31/2024	NM	N/A	1	13615-NM-08-2024-B801E76B-1 to 1
NM RPS Active	9aa7ddf2-4ffc	W13615	EPENMAGG1S NM186S	EPENMAGG1S NM186S	Solar	8/1/2024	8/1/2024	8/31/2024	NM	N/A	2	13615-NM-08-2024-B47DDAA3-1 to 2
NM RPS Active	9aa7ddf2-4ffc	W13616	EPENMAGG1S NM187S	EPENMAGG1S NM187S	Solar	8/1/2024	8/1/2024	8/31/2024	NM	N/A	1	13616-NM-08-2024-A88F8883-1 to 1
NM RPS Active	9aa7ddf2-4ffc	W13701	EPENMAGG1S NM188S	EPENMAGG1S NM188S	Solar	8/1/2024	8/1/2024	8/31/2024	NM	N/A	1	13701-NM-08-2024-234BC3FD-1 to 1
NM RPS Active	9aa7ddf2-4ffc	W13701	EPENMAGG1S NM188S	EPENMAGG1S NM188S	Solar	8/1/2024	8/1/2024	8/31/2024	NM	N/A	2	13701-NM-08-2024-B2AD7B35-1 to 2
NM RPS Active	9aa7ddf2-4ffc	W13702	EPENMAGG1S NM189S	EPENMAGG1S NM189S	Solar	8/1/2024	8/1/2024	8/31/2024	NM	N/A	4	13702-NM-08-2024-467507D2-1 to 4
NM RPS Active	9aa7ddf2-4ffc	W13799	EPENMAGG1S NM190S	EPENMAGG1S NM190S	Solar	8/1/2024	8/1/2024	8/31/2024	NM	N/A	2	13799-NM-08-2024-2BC59FF4-1 to 2
NM RPS Active	9aa7ddf2-4ffc	W13801	EPENMAGG1S NM191S	EPENMAGG1S NM191S	Solar	8/1/2024	8/1/2024	8/31/2024	NM	N/A	1	13801-NM-08-2024-6303155F-1 to 1
NM RPS Active	9aa7ddf2-4ffc	W13802	EPENMAGG1S NM192S	EPENMAGG1S NM192S	Solar	8/1/2024	8/1/2024	8/31/2024	NM	N/A	4	13802-NM-08-2024-46F34076-1 to 4
NM RPS Active	9aa7ddf2-4ffc	W13803	EPENMAGG1S NM193S	EPENMAGG1S NM193S	Solar	8/1/2024	8/1/2024	8/31/2024	NM	N/A	5	13803-NM-08-2024-9A8B0B53-1 to 5
NM RPS Active	9aa7ddf2-4ffc	W13804	EPENMAGG1S NM194S	EPENMAGG1S NM194S	Solar	8/1/2024	8/1/2024	8/31/2024	NM	N/A	1	13804-NM-08-2024-077F41E7-1 to 1
NM RPS Active	9aa7ddf2-4ffc	W13897	EPENMAGG1S NM195S	EPENMAGG1S NM195S	Solar	8/1/2024	8/1/2024	8/31/2024	NM	N/A	6	13897-NM-08-2024-519B9821-1 to 6
NM RPS Active	9aa7ddf2-4ffc	W13898	EPENMAGG1S NM196S	EPENMAGG1S NM196S	Solar	8/1/2024	8/1/2024	8/31/2024	NM	N/A	4	13898-NM-08-2024-81B2E31D-1 to 4
NM RPS Active	9aa7ddf2-4ffc	W13972	EPENMAGG1S NM197S	EPENMAGG1S NM197S	Solar	8/1/2024	8/1/2024	8/31/2024	NM	N/A	2	13972-NM-08-2024-B1D43B78-1 to 2
NM RPS Active	9aa7ddf2-4ffc	W13973	EPENMAGG1S NM198S	EPENMAGG1S NM198S	Solar	8/1/2024	8/1/2024	8/31/2024	NM	N/A	1	13973-NM-08-2024-8BA04A23-1 to 1
NM RPS Active	9aa7ddf2-4ffc	W13975	EPENMAGG1S NM199S	EPENMAGG1S NM199S	Solar	8/1/2024	8/1/2024	8/31/2024	NM	N/A	2	13975-NM-08-2024-C8F56969-1 to 2
NM RPS Active	9aa7ddf2-4ffc	W14044	EPENMAGG1S NM200S	EPENMAGG1S NM200S	Solar	8/1/2024	8/1/2024	8/31/2024	NM	N/A	2	14044-NM-08-2024-4C80D460-1 to 2
NM RPS Active	9aa7ddf2-4ffc	W14044	EPENMAGG1S NM200S	EPENMAGG1S NM200S	Solar	8/1/2024	8/1/2024	8/31/2024	NM	N/A	2	14044-NM-08-2024-2B0B2D08-1 to 2
NM RPS Active	9aa7ddf2-4ffc	W14045	EPENMAGG1S NM201S	EPENMAGG1S NM201S	Solar	8/1/2024	8/1/2024	8/31/2024	NM	SMUD	2	14045-NM-08-2024-36487DCB-1 to 2
NM RPS Active	9aa7ddf2-4ffc	W14046	EPENMAGG1S NM202S	EPENMAGG1S NM202S	Solar	8/1/2024	8/1/2024	8/31/2024	NM	N/A	3	14046-NM-08-2024-5ADC3CE1-1 to 3
NM RPS Active	9aa7ddf2-4ffc	W14049	EPENMAGG1S NM204S	EPENMAGG1S NM204S	Solar	8/1/2024	8/1/2024	8/31/2024	NM	SMUD	3	14049-NM-08-2024-4FBDF773-1 to 3
NM RPS Active	9aa7ddf2-4ffc	W14225	N/A	EPENMAGG1S NM205S	Solar	8/1/2024	8/1/2024	8/31/2024	NM	N/A	3	14225-NM-08-2024-B2F00D31-1 to 3
NM RPS Active	9aa7ddf2-4ffc	W14230	N/A	EPENMAGG1S NM206S	Solar	8/1/2024	8/1/2024	8/31/2024	NM	N/A	2	14230-NM-08-2024-A94C2642-1 to 2
NM RPS Active	9aa7ddf2-4ffc	W14334	N/A	EPENMAGG1S NM207S	Solar	8/1/2024	8/1/2024	8/31/2024	NM	N/A	1	14334-NM-08-2024-C4307C29-1 to 1
NM RPS Active	9aa7ddf2-4ffc	W14334	N/A	EPENMAGG1S NM207S	Solar	8/1/2024	8/1/2024	8/31/2024	NM	N/A	1	14334-NM-08-2024-6BAB8A97-1 to 1
NM RPS Active	9aa7ddf2-4ffc	W15470	N/A	EPENMAGG1S NM208S	Solar	8/1/2024	8/1/2024	8/31/2024	NM	N/A	2	15470-NM-08-2024-A4B2FBE8-1 to 2
NM RPS Active	9aa7ddf2-4ffc	W15470	N/A	EPENMAGG1S NM208S	Solar	8/1/2024	8/1/2024	8/31/2024	NM	N/A	2	15470-NM-08-2024-75846887-1 to 2
NM RPS Active	9aa7ddf2-4ffc	W15471	N/A	EPENMAGG1S NM209S	Solar	8/1/2024	8/1/2024	8/31/2024	NM	N/A	2	15471-NM-08-2024-48CFEFA1-1 to 2
NM RPS Active	9aa7ddf2-4ffc	W15472	N/A	EPENMAGG1S NM210S	Solar	8/1/2024	8/1/2024	8/31/2024	NM	N/A	3	15472-NM-08-2024-8E950CCE-1 to 3
NM RPS Active	9aa7ddf2-4ffc	W15474	N/A	EPENMAGG1S NM212S	Solar	8/1/2024	8/1/2024	8/31/2024	NM	N/A	1	15474-NM-08-2024-A94D3463-1 to 1
NM RPS Active	9aa7ddf2-4ffc	W15475	N/A	EPENMAGG1S NM213S	Solar	8/1/2024	8/1/2024	8/31/2024	NM	N/A	3	15475-NM-08-2024-85111605-1 to 3
NM RPS Active	9aa7ddf2-4ffc	W15517	N/A	EPENMAGG1S NM214S	Solar	8/1/2024	8/1/2024	8/31/2024	NM	N/A	1	15517-NM-08-2024-C1AA8863-1 to 1
NM RPS Active	9aa7ddf2-4ffc	W15517	N/A	EPENMAGG1S NM214S	Solar	8/1/2024	8/1/2024	8/31/2024	NM	N/A	1	15517-NM-08-2024-859CCA21-1 to 1
NM RPS Active	9aa7ddf2-4ffc	W15518	N/A	EPENMAGG1S NM215S	Solar	8/1/2024	8/1/2024	8/31/2024	NM	N/A	3	15518-NM-08-2024-4D2D6D20-1 to 3
NM RPS Active	9aa7ddf2-4ffc	W15519	N/A	EPENMAGG1S NM216S	Solar	8/1/2024	8/1/2024	8/31/2024	NM	N/A	3	15519-NM-08-2024-21F6DCB8-1 to 3
NM RPS Active	9aa7ddf2-4ffc	W15520	N/A	EPENMAGG1S NM217S	Solar	8/1/2024	8/1/2024	8/31/2024	NM	N/A	2	15520-NM-08-2024-7D6C1B1A-1 to 2
NM RPS Active	9aa7ddf2-4ffc	W15521	N/A	EPENMAGG1S NM218S	Solar	8/1/2024	8/1/2024	8/31/2024	NM	N/A	2	15521-NM-08-2024-F614A242-1 to 2
NM RPS Active	9aa7ddf2-4ffc	W15533	N/A	EPENMAGG1S NM219S	Solar	8/1/2024	8/1/2024	8/31/2024	NM	N/A	2	15533-NM-08-2024-BE2E1327-1 to 2
NM RPS Active	9aa7ddf2-4ffc	W15702	N/A	EPENMAGG1S NM220S	Solar	8/1/2024	8/1/2024	8/31/2024	NM	N/A	2	15702-NM-08-2024-3ECFC7B7-1 to 2
NM RPS Active	9aa7ddf2-4ffc	W15703	N/A	EPENMAGG1S NM221S	Solar	8/1/2024	8/1/2024	8/31/2024	NM	N/A	8	15703-NM-08-2024-0EB77C80-1 to 8
NM RPS Active	9aa7ddf2-4ffc	W15704	N/A	EPENMAGG1S NM222S	Solar	8/1/2024	8/1/2024	8/31/2024	NM	N/A	2	15704-NM-08-2024-5CF77FC9-1 to 2
NM RPS Active	9aa7ddf2-4ffc	W15705	N/A	EPENMAGG1S NM223S	Solar	8/1/2024	8/1/2024	8/31/2024	NM	N/A	5	15705-NM-08-2024-2E4B9D4B-1 to 5
NM RPS Active	9aa7ddf2-4ffc	W16065	N/A	EPENMAGG1S NM224S	Solar	8/1/2024	8/1/2024	8/31/2024	NM	N/A	2	16065-NM-08-2024-9F8D40FF-1 to 2
NM RPS Active	9aa7ddf2-4ffc	W16066	N/A	EPENMAGG1S NM225S	Solar	8/1/2024	8/1/2024	8/31/2024	NM	N/A	2	16066-NM-08-2024-D92D0DC6-1 to 2
NM RPS Active	9aa7ddf2-4ffc	W16066	N/A	EPENMAGG1S NM225S	Solar	8/1/2024	8/1/2024	8/31/2024	NM	N/A	1	16066-NM-08-2024-87D086B3-1 to 1
NM RPS Active	9aa7ddf2-4ffc	W16067	N/A	EPENMAGG1S NM226S	Solar	8/1/2024	8/1/2024	8/31/2024	NM	N/A	1	16067-NM-08-2024-BBE9FC47-1 to 1
NM RPS Active	9aa7ddf2-4ffc	W16490	N/A	EPENMAGG1S NM227S	Solar	8/1/2024	8/1/2024	8/31/2024	NM	N/A	4	16490-NM-08-2024-DFE034E0-1 to 4
NM RPS Active	9aa7ddf2-4ffc	W16492	N/A	EPENMAGG1S NM229S	Solar	8/1/2024	8/1/2024	8/31/2024	NM	N/A	2	16492-NM-08-2024-9B7FEC9C-1 to 2
NM RPS Active	9aa7ddf2-4ffc	W16493	N/A	EPENMAGG1S NM230S	Solar	8/1/2024	8/1/2024	8/31/2024	NM	N/A	1	16493-NM-08-2024-C72C37F8-1 to 1
NM RPS Active	9aa7ddf2-4ffc	W16493	N/A	EPENMAGG1S NM230S	Solar	8/1/2024	8/1/2024	8/31/2024	NM	N/A	2	16493-NM-08-2024-793CD37F-1 to 2
NM RPS Active	9aa7ddf2-4ffc	W16494	N/A	EPENMAGG1S NM231S	Solar	8/1/2024	8/1/2024	8/31/2024	NM	N/A	3	16494-NM-08-2024-524CDC57-1 to 3
NM RPS Active	9aa7ddf2-4ffc	W17425	N/A	EPENMAGG1S NM232S	Solar	8/1/2024	8/1/2024	8/31/2024	NM	N/A	2	17425-NM-08-2024-9EE11D36-1 to 2
NM RPS Active	9aa7ddf2-4ffc	W17426	N/A	EPENMAGG1S NM233S	Solar	8/1/2024	8/1/2024	8/31/2024	NM	N/A	1	17426-NM-08-2024-9A9A3C56-1 to 1
NM RPS Active	9aa7ddf2-4ffc	W17426	N/A	EPENMAGG1S NM233S	Solar	8/1/2024	8/1/2024	8/31/2024	NM	N/A	2	17426-NM-08-2024-6BE29952-1 to 2

Account	Account ID	WREGIS GU ID	Unit Name	Facility Name	Fuel Type	Vintage	Generation Start Date	Generation End Date	Generator Location	Eligility	Quantity (RECs)	Serial Numbers
NM RPS Active	9aa7ddf2-4ffc	W17427	N/A	EPENMAGG1S NM235S	Solar	8/1/2024	8/1/2024	8/31/2024	NM	N/A	2	17427-NM-08-2024-004E74EF-1 to 2
NM RPS Active	9aa7ddf2-4ffc	W17428	N/A	EPENMAGG1S NM236S	Solar	8/1/2024	8/1/2024	8/31/2024	NM	N/A	1	17428-NM-08-2024-B48A760C-1 to 1
NM RPS Active	9aa7ddf2-4ffc	W17429	N/A	EPENMAGG1S NM237S	Solar	8/1/2024	8/1/2024	8/31/2024	NM	N/A	5	17429-NM-08-2024-0D2B0D7D-1 to 5
NM RPS Active	9aa7ddf2-4ffc	W17430	N/A	EPENMAGG1S NM238S	Solar	8/1/2024	8/1/2024	8/31/2024	NM	N/A	1	17430-NM-08-2024-72D90892-1 to 1
NM RPS Active	9aa7ddf2-4ffc	W17431	N/A	EPENMAGG1S NM239S	Solar	8/1/2024	8/1/2024	8/31/2024	NM	N/A	4	17431-NM-08-2024-F45A8C5C-1 to 4
NM RPS Active	9aa7ddf2-4ffc	W17432	N/A	EPENMAGG1S NM240S	Solar	8/1/2024	8/1/2024	8/31/2024	NM	N/A	2	17432-NM-08-2024-E059B13F-1 to 2
NM RPS Active	9aa7ddf2-4ffc	W17433	N/A	EPENMAGG1S NM241S	Solar	8/1/2024	8/1/2024	8/31/2024	NM	N/A	2	17433-NM-08-2024-21A903B2-1 to 2
NM RPS Active	9aa7ddf2-4ffc	W17434	N/A	EPENMAGG1S NM242S	Solar	8/1/2024	8/1/2024	8/31/2024	NM	N/A	1	17434-NM-08-2024-066ECEA6-1 to 1
NM RPS Active	9aa7ddf2-4ffc	W17435	N/A	EPENMAGG1S NM243S	Solar	8/1/2024	8/1/2024	8/31/2024	NM	N/A	2	17435-NM-08-2024-102F155F-1 to 2
NM RPS Active	9aa7ddf2-4ffc	W17436	N/A	EPENMAGG1S NM244S	Solar	8/1/2024	8/1/2024	8/31/2024	NM	N/A	2	17436-NM-08-2024-85723B6C-1 to 2
NM RPS Active	9aa7ddf2-4ffc	W17546	N/A	EPENMAGG1S NM245S	Solar	8/1/2024	8/1/2024	8/31/2024	NM	N/A	3	17546-NM-08-2024-B483B86C-1 to 3
NM RPS Active	9aa7ddf2-4ffc	W17824	N/A	EPENMAGG1S NM246S	Solar	8/1/2024	8/1/2024	8/31/2024	NM	N/A	2	17824-NM-08-2024-5D185984-1 to 2
NM RPS Active	9aa7ddf2-4ffc	W17825	N/A	EPENMAGG1S NM247S	Solar	8/1/2024	8/1/2024	8/31/2024	NM	N/A	1	17825-NM-08-2024-2550A34D-1 to 1
NM RPS Active	9aa7ddf2-4ffc	W17825	N/A	EPENMAGG1S NM247S	Solar	8/1/2024	8/1/2024	8/31/2024	NM	N/A	1	17825-NM-08-2024-D6EF9229-1 to 1
NM RPS Active	9aa7ddf2-4ffc	W18165	N/A	EPENMAGG1S NM248S	Solar	8/1/2024	8/1/2024	8/31/2024	NM	N/A	4	18165-NM-08-2024-10EDB1FA-1 to 4
NM RPS Active	9aa7ddf2-4ffc	W18166	N/A	EPENMAGG1S NM249S	Solar	8/1/2024	8/1/2024	8/31/2024	NM	N/A	6	18166-NM-08-2024-E4FBA4AC-1 to 6
NM RPS Active	9aa7ddf2-4ffc	W18167	N/A	EPENMAGG1S NM250S	Solar	8/1/2024	8/1/2024	8/31/2024	NM	N/A	3	18167-NM-08-2024-6E3DDA1D-1 to 3
NM RPS Active	9aa7ddf2-4ffc	W18279	N/A	EPENMAGG1S NM251S	Solar	8/1/2024	8/1/2024	8/31/2024	NM	N/A	4	18279-NM-08-2024-6C4D06F0-1 to 4
NM RPS Active	9aa7ddf2-4ffc	W18280	N/A	EPENMAGG1S NM252S	Solar	8/1/2024	8/1/2024	8/31/2024	NM	N/A	11	18280-NM-08-2024-1DD70482-1 to 11
NM RPS Active	9aa7ddf2-4ffc	W18547	N/A	EPENMAGG1S NM253S	Solar	8/1/2024	8/1/2024	8/31/2024	NM	N/A	7	18547-NM-08-2024-E9118C4A-1 to 7
NM RPS Active	9aa7ddf2-4ffc	W18548	N/A	EPENMAGG1S NM254S	Solar	8/1/2024	8/1/2024	8/31/2024	NM	N/A	5	18548-NM-08-2024-F4DB75D6-1 to 5
NM RPS Active	9aa7ddf2-4ffc	W18750	N/A	EPENMAGG1S NM255S	Solar	8/1/2024	8/1/2024	8/31/2024	NM	N/A	4	18750-NM-08-2024-BD60E769-1 to 4
NM RPS Active	9aa7ddf2-4ffc	W19059	N/A	EPENMAGG1S NM256S	Solar	8/1/2024	8/1/2024	8/31/2024	NM	N/A	3	19059-NM-08-2024-21E4D1B7-1 to 3
NM RPS Active	9aa7ddf2-4ffc	W20226	N/A	EPENMAGG1S NM258S	Solar	8/1/2024	8/1/2024	8/31/2024	NM	N/A	1	20226-NM-08-2024-38715804-1 to 1
NM RPS Active	9aa7ddf2-4ffc	W20227	N/A	EPENMAGG1S NM259S	Solar	8/1/2024	8/1/2024	8/31/2024	NM	N/A	1	20227-NM-08-2024-914FFEBE-1 to 1
NM RPS Active	9aa7ddf2-4ffc	W20227	N/A	EPENMAGG1S NM259S	Solar	8/1/2024	8/1/2024	8/31/2024	NM	N/A	1	20227-NM-08-2024-F74DFFC4-1 to 1
NM RPS Active	9aa7ddf2-4ffc	W12647	EPE NM174S - City of Las Cruces - Water Treatment Facilities	EPE NM174S	Solar	9/1/2024	9/1/2024	9/30/2024	NM	N/A	18	12647-NM-09-2024-37F642BF-1 to 18
NM RPS Active	9aa7ddf2-4ffc	W12650	EPE NM175S - City of Las Cruces - Utilities - Waste Water	EPE NM175S	Solar	9/1/2024	9/1/2024	9/30/2024	NM	N/A	8	12650-NM-09-2024-82FC8262-1 to 8
NM RPS Active	9aa7ddf2-4ffc	W3622	EPENMAGG1S NM001S	EPENMAGG1S NM001S	Solar	9/1/2024	9/1/2024	9/30/2024	NM	N/A	3	3622-NM-09-2024-76531B69-1 to 3
NM RPS Active	9aa7ddf2-4ffc	W3624	EPENMAGG1S NM002S	EPENMAGG1S NM002S	Solar	9/1/2024	9/1/2024	9/30/2024	NM	N/A	2	3624-NM-09-2024-4C4F54AB-1 to 2
NM RPS Active	9aa7ddf2-4ffc	W3637	EPENMAGG1S NM003S	EPENMAGG1S NM003S	Solar	9/1/2024	9/1/2024	9/30/2024	NM	N/A	2	3637-NM-09-2024-38A0F3E4-1 to 2
NM RPS Active	9aa7ddf2-4ffc	W3638	EPENMAGG1S NM004S	EPENMAGG1S NM004S	Solar	9/1/2024	9/1/2024	9/30/2024	NM	N/A	1	3638-NM-09-2024-7FDB5302-1 to 1
NM RPS Active	9aa7ddf2-4ffc	W3641	EPENMAGG1s NM007S	EPENMAGG1s NM007S	Solar	9/1/2024	9/1/2024	9/30/2024	NM	N/A	1	3641-NM-09-2024-F33DCFF1-1 to 1
NM RPS Active	9aa7ddf2-4ffc	W3642	EPENMAGG1s NM008S	EPENMAGG1s NM008S	Solar	9/1/2024	9/1/2024	9/30/2024	NM	N/A	1	3642-NM-09-2024-2FDBCC22-1 to 1
NM RPS Active	9aa7ddf2-4ffc	W3643	EPENMAGG1s NM009S	EPENMAGG1s NM009S	Solar	9/1/2024	9/1/2024	9/30/2024	NM	N/A	1	3643-NM-09-2024-FD80EFDC-1 to 1
NM RPS Active	9aa7ddf2-4ffc	W3645	EPENMAGG1S NM011S	EPENMAGG1S NM011S	Solar	9/1/2024	9/1/2024	9/30/2024	NM	N/A	1	3645-NM-09-2024-DB38CC2B-1 to 1
NM RPS Active	9aa7ddf2-4ffc	W3647	EPENMAGG1S NM013S	EPENMAGG1S NM013S	Solar	9/1/2024	9/1/2024	9/30/2024	NM	N/A	1	3647-NM-09-2024-AA3A0B07-1 to 1
NM RPS Active	9aa7ddf2-4ffc	W3650	EPENMAGG1S NM016S	EPENMAGG1S NM016S	Solar	9/1/2024	9/1/2024	9/30/2024	NM	N/A	1	3650-NM-09-2024-8216254D-1 to 1
NM RPS Active	9aa7ddf2-4ffc	W3651	EPENMAGG1S NM017S	EPENMAGG1S NM017S	Solar	9/1/2024	9/1/2024	9/30/2024	NM	N/A	1	3651-NM-09-2024-30A7C351-1 to 1
NM RPS Active	9aa7ddf2-4ffc	W3652	EPENMAGG1S NM018S	EPENMAGG1S NM018S	Solar	9/1/2024	9/1/2024	9/30/2024	NM	N/A	4	3652-NM-09-2024-1AB7B33B-1 to 4
NM RPS Active	9aa7ddf2-4ffc	W3653	EPENMAGG1S NM019S	EPENMAGG1S NM019S	Solar	9/1/2024	9/1/2024	9/30/2024	NM	N/A	1	3653-NM-09-2024-10C10540-1 to 1
NM RPS Active	9aa7ddf2-4ffc	W3654	EPENMAGG1S NM020S	EPENMAGG1S NM020S	Solar	9/1/2024	9/1/2024	9/30/2024	NM	N/A	2	3654-NM-09-2024-68C9E873-1 to 2
NM RPS Active	9aa7ddf2-4ffc	W3655	EPENMAGG1S NM021S	EPENMAGG1S NM021S	Solar	9/1/2024	9/1/2024	9/30/2024	NM	N/A	2	3655-NM-09-2024-5742B75F-1 to 2
NM RPS Active	9aa7ddf2-4ffc	W3656	EPENMAGG1S NM022S	EPENMAGG1S NM022S	Solar	9/1/2024	9/1/2024	9/30/2024	NM	N/A	2	3656-NM-09-2024-B5C15714-1 to 2
NM RPS Active	9aa7ddf2-4ffc	W3657	EPENMAGG1S NM023S	EPENMAGG1S NM023S	Solar	9/1/2024	9/1/2024	9/30/2024	NM	N/A	2	3657-NM-09-2024-39DB0B34-1 to 2
NM RPS Active	9aa7ddf2-4ffc	W3658	EPENMAGG1S NM024S	EPENMAGG1S NM024S	Solar	9/1/2024	9/1/2024	9/30/2024	NM	N/A	3	3658-NM-09-2024-EBAF37C9-1 to 3
NM RPS Active	9aa7ddf2-4ffc	W3660	EPENMAGG1S NM026S	EPENMAGG1S NM026S	Solar	9/1/2024	9/1/2024	9/30/2024	NM	N/A	1	3660-NM-09-2024-7699E7A3-1 to 1
NM RPS Active	9aa7ddf2-4ffc	W3838	EPENMAGG1S NM027S	EPENMAGG1S NM027S	Solar	9/1/2024	9/1/2024	9/30/2024	NM	N/A	5	3838-NM-09-2024-310D432F-1 to 5
NM RPS Active	9aa7ddf2-4ffc	W3839	EPENMAGG1S NM028S	EPENMAGG1S NM028S	Solar	9/1/2024	9/1/2024	9/30/2024	NM	N/A	1	3839-NM-09-2024-2E8D8383-1 to 1
NM RPS Active	9aa7ddf2-4ffc	W3946	EPENMAGG1S NM029S	EPENMAGG1S NM029S	Solar	9/1/2024	9/1/2024	9/30/2024	NM	N/A	1	3946-NM-09-2024-C2F0A7C6-1 to 1
NM RPS Active	9aa7ddf2-4ffc	W3947	EPENMAGG1S NM030S	EPENMAGG1S NM030S	Solar	9/1/2024	9/1/2024	9/30/2024	NM	N/A	1	3947-NM-09-2024-6242AEA0-1 to 1
NM RPS Active	9aa7ddf2-4ffc	W3948	EPENMAGG1S NM031S	EPENMAGG1S NM031S	Solar	9/1/2024	9/1/2024	9/30/2024	NM	N/A	1	3948-NM-09-2024-7E6DAFB6-1 to 1
NM RPS Active	9aa7ddf2-4ffc	W3949	EPENMAGG1S NM032S	EPENMAGG1S NM032S	Solar	9/1/2024	9/1/2024	9/30/2024	NM	N/A	1	3949-NM-09-2024-BD313794-1 to 1
NM RPS Active	9aa7ddf2-4ffc	W3951	EPENMAGG1S NM034S	EPENMAGG1S NM034S	Solar	9/1/2024	9/1/2024	9/30/2024	NM	N/A	1	3951-NM-09-2024-F92CA615-1 to 1

Account	Account ID	WREGIS GU ID	Unit Name	Facility Name	Fuel Type	Vintage	Generation Start Date	Generation End Date	Generator Location	Eligility	Quantity (RECs)	Serial Numbers
NM RPS Active	9aa7ddf2-4ffc	W3952	EPENMAGG1S NM035S	EPENMAGG1S NM035S	Solar	9/1/2024	9/1/2024	9/30/2024	NM	N/A	1	3952-NM-09-2024-7C22F597-1 to 1
NM RPS Active	9aa7ddf2-4ffc	W4101	EPENMAGG1S NM036S	EPENMAGG1S NM036S	Solar	9/1/2024	9/1/2024	9/30/2024	NM	N/A	1	4101-NM-09-2024-82CB0C9D-1 to 1
NM RPS Active	9aa7ddf2-4ffc	W4121	EPENMAGG1S NM037S	EPENMAGG1S NM037S	Solar	9/1/2024	9/1/2024	9/30/2024	NM	N/A	1	4121-NM-09-2024-2A22CDB5-1 to 1
NM RPS Active	9aa7ddf2-4ffc	W4221	EPENMAGG1S NM038S	EPENMAGG1S NM038S	Solar	9/1/2024	9/1/2024	9/30/2024	NM	N/A	3	4221-NM-09-2024-CEEED9F7-1 to 3
NM RPS Active	9aa7ddf2-4ffc	W4270	EPENMAGG1S NM039S	EPENMAGG1S NM039S	Solar	9/1/2024	9/1/2024	9/30/2024	NM	N/A	2	4270-NM-09-2024-05F2A382-1 to 2
NM RPS Active	9aa7ddf2-4ffc	W4412	EPENMAGG1S NM041S	EPENMAGG1S NM041S	Solar	9/1/2024	9/1/2024	9/30/2024	NM	N/A	1	4412-NM-09-2024-177A5568-1 to 1
NM RPS Active	9aa7ddf2-4ffc	W4437	EPENMAGG1S NM042S	EPENMAGG1S NM042S	Solar	9/1/2024	9/1/2024	9/30/2024	NM	N/A	2	4437-NM-09-2024-19E611AB-1 to 2
NM RPS Active	9aa7ddf2-4ffc	W4459	EPENMAGG1S NM043S	EPENMAGG1S NM043S	Solar	9/1/2024	9/1/2024	9/30/2024	NM	N/A	4	4459-NM-09-2024-D22C2558-1 to 4
NM RPS Active	9aa7ddf2-4ffc	W4507	EPENMAGG1S NM044S	EPENMAGG1S NM044S	Solar	9/1/2024	9/1/2024	9/30/2024	NM	N/A	3	4507-NM-09-2024-2A26F564-1 to 3
NM RPS Active	9aa7ddf2-4ffc	W4649	EPENMAGG1S NM045S	EPENMAGG1S NM045S	Solar	9/1/2024	9/1/2024	9/30/2024	NM	N/A	1	4649-NM-09-2024-0D3AB15B-1 to 1
NM RPS Active	9aa7ddf2-4ffc	W4704	EPENMAGG1S NM046S	EPENMAGG1S NM046S	Solar	9/1/2024	9/1/2024	9/30/2024	NM	N/A	2	4704-NM-09-2024-EBC0B4EB-1 to 2
NM RPS Active	9aa7ddf2-4ffc	W4732	EPENMAGG1S NM047S	EPENMAGG1S NM047S	Solar	9/1/2024	9/1/2024	9/30/2024	NM	N/A	7	4732-NM-09-2024-4D1F3344-1 to 7
NM RPS Active	9aa7ddf2-4ffc	W4806	EPENMAGG1S NM048S	EPENMAGG1S NM048S	Solar	9/1/2024	9/1/2024	9/30/2024	NM	N/A	1	4806-NM-09-2024-2675D387-1 to 1
NM RPS Active	9aa7ddf2-4ffc	W4842	EPENMAGG1S NM050S	EPENMAGG1S NM050S	Solar	9/1/2024	9/1/2024	9/30/2024	NM	N/A	1	4842-NM-09-2024-516F63D9-1 to 1
NM RPS Active	9aa7ddf2-4ffc	W4843	EPENMAGG1S NM051S	EPENMAGG1S NM051S	Solar	9/1/2024	9/1/2024	9/30/2024	NM	N/A	3	4843-NM-09-2024-EDC09EAE-1 to 3
NM RPS Active	9aa7ddf2-4ffc	W4961	EPENMAGG1S NM052S	EPENMAGG1S NM052S	Solar	9/1/2024	9/1/2024	9/30/2024	NM	N/A	1	4961-NM-09-2024-14BFE216-1 to 1
NM RPS Active	9aa7ddf2-4ffc	W5022	EPENMAGG1S NM053S	EPENMAGG1S NM053S	Solar	9/1/2024	9/1/2024	9/30/2024	NM	N/A	1	5022-NM-09-2024-7BA4FBAF-1 to 1
NM RPS Active	9aa7ddf2-4ffc	W5071	EPENMAGG1S NM054S	EPENMAGG1S NM054S	Solar	9/1/2024	9/1/2024	9/30/2024	NM	N/A	1	5071-NM-09-2024-E01BD1EC-1 to 1
NM RPS Active	9aa7ddf2-4ffc	W5080	EPENMAGG1S NM056S	EPENMAGG1S NM056S	Solar	9/1/2024	9/1/2024	9/30/2024	NM	N/A	1	5080-NM-09-2024-F8AF2149-1 to 1
NM RPS Active	9aa7ddf2-4ffc	W5111	EPENMAGG1S NM057S	EPENMAGG1S NM057S	Solar	9/1/2024	9/1/2024	9/30/2024	NM	N/A	2	5111-NM-09-2024-483C218C-1 to 2
NM RPS Active	9aa7ddf2-4ffc	W5112	EPENMAGG1S NM058S	EPENMAGG1S NM058S	Solar	9/1/2024	9/1/2024	9/30/2024	NM	N/A	2	5112-NM-09-2024-A5A4C937-1 to 2
NM RPS Active	9aa7ddf2-4ffc	W5280	EPENMAGG1S NM059S	EPENMAGG1S NM059S	Solar	9/1/2024	9/1/2024	9/30/2024	NM	N/A	1	5280-NM-09-2024-4890DB4F-1 to 1
NM RPS Active	9aa7ddf2-4ffc	W5318	EPENMAGG1S NM060S	EPENMAGG1S NM060S	Solar	9/1/2024	9/1/2024	9/30/2024	NM	SMUD	1	5318-NM-09-2024-B6C4253D-1 to 1
NM RPS Active	9aa7ddf2-4ffc	W5320	EPENMAGG1S NM062S	EPENMAGG1S NM062S	Solar	9/1/2024	9/1/2024	9/30/2024	NM	N/A	1	5320-NM-09-2024-7B3211CF-1 to 1
NM RPS Active	9aa7ddf2-4ffc	W5379	EPENMAGG1S NM063S	EPENMAGG1S NM063S	Solar	9/1/2024	9/1/2024	9/30/2024	NM	N/A	1	5379-NM-09-2024-D53711B7-1 to 1
NM RPS Active	9aa7ddf2-4ffc	W5469	EPENMAGG1S NM064S	EPENMAGG1S NM064S	Solar	9/1/2024	9/1/2024	9/30/2024	NM	N/A	2	5469-NM-09-2024-048714C2-1 to 2
NM RPS Active	9aa7ddf2-4ffc	W5547	EPENMAGG1S NM065S	EPENMAGG1S NM065S	Solar	9/1/2024	9/1/2024	9/30/2024	NM	N/A	2	5547-NM-09-2024-C0EE8DF5-1 to 2
NM RPS Active	9aa7ddf2-4ffc	W5652	EPENMAGG1S NM067S	EPENMAGG1S NM067S	Solar	9/1/2024	9/1/2024	9/30/2024	NM	N/A	1	5652-NM-09-2024-6C7F1B5A-1 to 1
NM RPS Active	9aa7ddf2-4ffc	W5742	EPENMAGG1S NM070S	EPENMAGG1S NM070S	Solar	9/1/2024	9/1/2024	9/30/2024	NM	N/A	2	5742-NM-09-2024-B7FCFCC7-1 to 2
NM RPS Active	9aa7ddf2-4ffc	W5790	EPENMAGG1S NM071S	EPENMAGG1S NM071S	Solar	9/1/2024	9/1/2024	9/30/2024	NM	N/A	6	5790-NM-09-2024-013BCD26-1 to 6
NM RPS Active	9aa7ddf2-4ffc	W5869	EPENMAGG1S NM073S	EPENMAGG1S NM073S	Solar	9/1/2024	9/1/2024	9/30/2024	NM	N/A	1	5869-NM-09-2024-7DFA18D0-1 to 1
NM RPS Active	9aa7ddf2-4ffc	W7116	EPENMAGG1S NM074S	EPENMAGG1S NM074S	Solar	9/1/2024	9/1/2024	9/30/2024	NM	N/A	1	7116-NM-09-2024-7A79048A-1 to 1
NM RPS Active	9aa7ddf2-4ffc	W7117	EPENMAGG1S NM075S	EPENMAGG1S NM075S	Solar	9/1/2024	9/1/2024	9/30/2024	NM	N/A	2	7117-NM-09-2024-B06A5EC4-1 to 2
NM RPS Active	9aa7ddf2-4ffc	W7118	EPENMAGG1S NM076S	EPENMAGG1S NM076S	Solar	9/1/2024	9/1/2024	9/30/2024	NM	N/A	1	7118-NM-09-2024-3977D101-1 to 1
NM RPS Active	9aa7ddf2-4ffc	W7119	EPENMAGG1S NM077S	EPENMAGG1S NM077S	Solar	9/1/2024	9/1/2024	9/30/2024	NM	N/A	5	7119-NM-09-2024-ED1F2C44-1 to 5
NM RPS Active	9aa7ddf2-4ffc	W7120	EPENMAGG1S NM078S	EPENMAGG1S NM078S	Solar	9/1/2024	9/1/2024	9/30/2024	NM	N/A	2	7120-NM-09-2024-5459CB0D-1 to 2
NM RPS Active	9aa7ddf2-4ffc	W7121	EPENMAGG1S NM079S	EPENMAGG1S NM079S	Solar	9/1/2024	9/1/2024	9/30/2024	NM	N/A	1	7121-NM-09-2024-E4C3CB22-1 to 1
NM RPS Active	9aa7ddf2-4ffc	W7324	EPENMAGG1S NM080S	EPENMAGG1S NM080S	Solar	9/1/2024	9/1/2024	9/30/2024	NM	N/A	2	7324-NM-09-2024-D104FCE0-1 to 2
NM RPS Active	9aa7ddf2-4ffc	W7325	EPENMAGG1S NM081S	EPENMAGG1S NM081S	Solar	9/1/2024	9/1/2024	9/30/2024	NM	N/A	1	7325-NM-09-2024-41E83BBC-1 to 1
NM RPS Active	9aa7ddf2-4ffc	W7332	EPENMAGG1S NM082S	EPENMAGG1S NM082S	Solar	9/1/2024	9/1/2024	9/30/2024	NM	N/A	1	7332-NM-09-2024-5B42242F-1 to 1
NM RPS Active	9aa7ddf2-4ffc	W7333	EPENMAGG1S NM083S	EPENMAGG1S NM083S	Solar	9/1/2024	9/1/2024	9/30/2024	NM	N/A	2	7333-NM-09-2024-E8948112-1 to 2
NM RPS Active	9aa7ddf2-4ffc	W7424	EPENMAGG1S NM084S	EPENMAGG1S NM084S	Solar	9/1/2024	9/1/2024	9/30/2024	NM	N/A	3	7424-NM-09-2024-5BC34B44-1 to 3
NM RPS Active	9aa7ddf2-4ffc	W7547	EPENMAGG1S NM086S	EPENMAGG1S NM086S	Solar	9/1/2024	9/1/2024	9/30/2024	NM	N/A	1	7547-NM-09-2024-FE9C5B05-1 to 1
NM RPS Active	9aa7ddf2-4ffc	W7554	EPENMAGG1S NM087S	EPENMAGG1S NM087S	Solar	9/1/2024	9/1/2024	9/30/2024	NM	N/A	3	7554-NM-09-2024-748FF4D4-1 to 3
NM RPS Active	9aa7ddf2-4ffc	W7556	EPENMAGG1S NM089S	EPENMAGG1S NM089S	Solar	9/1/2024	9/1/2024	9/30/2024	NM	N/A	1	7556-NM-09-2024-9FC46772-1 to 1
NM RPS Active	9aa7ddf2-4ffc	W7558	EPENMAGG1S NM091S	EPENMAGG1S NM091S	Solar	9/1/2024	9/1/2024	9/30/2024	NM	N/A	1	7558-NM-09-2024-6801C654-1 to 1
NM RPS Active	9aa7ddf2-4ffc	W7559	EPENMAGG1S NM092S	EPENMAGG1S NM092S	Solar	9/1/2024	9/1/2024	9/30/2024	NM	N/A	2	7559-NM-09-2024-8F1C61AF-1 to 2
NM RPS Active	9aa7ddf2-4ffc	W7671	EPENMAGG1S NM094S	EPENMAGG1S NM094S	Solar	9/1/2024	9/1/2024	9/30/2024	NM	N/A	1	7671-NM-09-2024-98445F7B-1 to 1
NM RPS Active	9aa7ddf2-4ffc	W7672	EPENMAGG1S NM095S	EPENMAGG1S NM095S	Solar	9/1/2024	9/1/2024	9/30/2024	NM	N/A	1	7672-NM-09-2024-1B12201A-1 to 1
NM RPS Active	9aa7ddf2-4ffc	W7674	EPENMAGG1S NM097S	EPENMAGG1S NM097S	Solar	9/1/2024	9/1/2024	9/30/2024	NM	N/A	1	7674-NM-09-2024-72E333C7-1 to 1
NM RPS Active	9aa7ddf2-4ffc	W7699	EPENMAGG1S NM098S	EPENMAGG1S NM098S	Solar	9/1/2024	9/1/2024	9/30/2024	NM	N/A	1	7699-NM-09-2024-ADD1A9F4-1 to 1
NM RPS Active	9aa7ddf2-4ffc	W7700	EPENMAGG1S NM099S	EPENMAGG1S NM099S	Solar	9/1/2024	9/1/2024	9/30/2024	NM	N/A	1	7700-NM-09-2024-FB6F68EC-1 to 1
NM RPS Active	9aa7ddf2-4ffc	W8124	EPENMAGG1S NM101S	EPENMAGG1S NM101S	Solar	9/1/2024	9/1/2024	9/30/2024	NM	N/A	2	8124-NM-09-2024-097911AE-1 to 2
NM RPS Active	9aa7ddf2-4ffc	W8794	EPENMAGG1S NM104S	EPENMAGG1S NM104S	Solar	9/1/2024	9/1/2024	9/30/2024	NM	N/A	2	8794-NM-09-2024-68C9371F-1 to 2
NM RPS Active	9aa7ddf2-4ffc	W8835	EPENMAGG1S NM105S	EPENMAGG1S NM105S	Solar	9/1/2024	9/1/2024	9/30/2024	NM	N/A	2	8835-NM-09-2024-8A7D215F-1 to 2
NM RPS Active	9aa7ddf2-4ffc	W8836	EPENMAGG1S NM106S	EPENMAGG1S NM106S	Solar	9/1/2024	9/1/2024	9/30/2024	NM	N/A	1	8836-NM-09-2024-488C2505-1 to 1
NM RPS Active	9aa7ddf2-4ffc	W9324	EPENMAGG1S NM107S	EPENMAGG1S NM107S	Solar	9/1/2024	9/1/2024	9/30/2024	NM	N/A	3	9324-NM-09-2024-7ADB0E5F-1 to 3
NM RPS Active	9aa7ddf2-4ffc	W9325	EPENMAGG1S NM108S	EPENMAGG1S NM108S	Solar	9/1/2024	9/1/2024	9/30/2024	NM	N/A	1	9325-NM-09-2024-2B6E33ED-1 to 1

Account	Account ID	WREGIS GU ID	Unit Name	Facility Name	Fuel Type	Vintage	Generation Start Date	Generation End Date	Generator Location	Eligility	Quantity (RECs)	Serial Numbers
NM RPS Active	9aa7ddf2-4ffc	W9344	EPENMAGG1S NM109S	EPENMAGG1S NM109S	Solar	9/1/2024	9/1/2024	9/30/2024	NM	N/A	1	9344-NM-09-2024-AF8C3B31-1 to 1
NM RPS Active	9aa7ddf2-4ffc	W9345	EPENMAGG1S NM110S	EPENMAGG1S NM110S	Solar	9/1/2024	9/1/2024	9/30/2024	NM	N/A	3	9345-NM-09-2024-1103CE59-1 to 3
NM RPS Active	9aa7ddf2-4ffc	W9602	EPENMAGG1S NM111S	EPENMAGG1S NM111S	Solar	9/1/2024	9/1/2024	9/30/2024	NM	N/A	2	9602-NM-09-2024-E3139346-1 to 2
NM RPS Active	9aa7ddf2-4ffc	W9603	EPENMAGG1S NM112S	EPENMAGG1S NM112S	Solar	9/1/2024	9/1/2024	9/30/2024	NM	N/A	1	9603-NM-09-2024-297EB0B0-1 to 1
NM RPS Active	9aa7ddf2-4ffc	W10025	EPENMAGG1S NM113S	EPENMAGG1S NM113S	Solar	9/1/2024	9/1/2024	9/30/2024	NM	N/A	4	10025-NM-09-2024-41701845-1 to 4
NM RPS Active	9aa7ddf2-4ffc	W10026	EPENMAGG1S NM114S	EPENMAGG1S NM114S	Solar	9/1/2024	9/1/2024	9/30/2024	NM	N/A	1	10026-NM-09-2024-F66FF9CC-1 to 1
NM RPS Active	9aa7ddf2-4ffc	W10027	EPENMAGG1S NM115S	EPENMAGG1S NM115S	Solar	9/1/2024	9/1/2024	9/30/2024	NM	N/A	2	10027-NM-09-2024-F6E86368-1 to 2
NM RPS Active	9aa7ddf2-4ffc	W10105	EPENMAGG1S NM116S	EPENMAGG1S NM116S	Solar	9/1/2024	9/1/2024	9/30/2024	NM	N/A	2	10105-NM-09-2024-9E4EF4D9-1 to 2
NM RPS Active	9aa7ddf2-4ffc	W10106	EPENMAGG1S NM117S	EPENMAGG1S NM117S	Solar	9/1/2024	9/1/2024	9/30/2024	NM	N/A	1	10106-NM-09-2024-B536386E-1 to 1
NM RPS Active	9aa7ddf2-4ffc	W10107	EPENMAGG1S NM118S	EPENMAGG1S NM118S	Solar	9/1/2024	9/1/2024	9/30/2024	NM	N/A	2	10107-NM-09-2024-C064EB25-1 to 2
NM RPS Active	9aa7ddf2-4ffc	W10167	EPENMAGG1S NM119S	EPENMAGG1S NM119S	Solar	9/1/2024	9/1/2024	9/30/2024	NM	N/A	2	10167-NM-09-2024-77159901-1 to 2
NM RPS Active	9aa7ddf2-4ffc	W10460	EPENMAGG1S NM121S	EPENMAGG1S NM121S	Solar	9/1/2024	9/1/2024	9/30/2024	NM	N/A	2	10460-NM-09-2024-4DD95137-1 to 2
NM RPS Active	9aa7ddf2-4ffc	W10461	EPENMAGG1S NM122S	EPENMAGG1S NM122S	Solar	9/1/2024	9/1/2024	9/30/2024	NM	N/A	3	10461-NM-09-2024-55AA411B-1 to 3
NM RPS Active	9aa7ddf2-4ffc	W10695	EPENMAGG1S NM124S	EPENMAGG1S NM124S	Solar	9/1/2024	9/1/2024	9/30/2024	NM	N/A	2	10695-NM-09-2024-DF0495CB-1 to 2
NM RPS Active	9aa7ddf2-4ffc	W10820	EPENMAGG1S NM126S	EPENMAGG1S NM126S	Solar	9/1/2024	9/1/2024	9/30/2024	NM	N/A	1	10820-NM-09-2024-BA967A84-1 to 1
NM RPS Active	9aa7ddf2-4ffc	W10867	EPENMAGG1S NM128S	EPENMAGG1S NM128S	Solar	9/1/2024	9/1/2024	9/30/2024	NM	N/A	2	10867-NM-09-2024-AF3FD772-1 to 2
NM RPS Active	9aa7ddf2-4ffc	W10925	EPENMAGG1S NM131S	EPENMAGG1S NM131S	Solar	9/1/2024	9/1/2024	9/30/2024	NM	N/A	1	10925-NM-09-2024-9D7DB69C-1 to 1
NM RPS Active	9aa7ddf2-4ffc	W10926	EPENMAGG1S NM132S	EPENMAGG1S NM132S	Solar	9/1/2024	9/1/2024	9/30/2024	NM	N/A	1	10926-NM-09-2024-2983D424-1 to 1
NM RPS Active	9aa7ddf2-4ffc	W11363	EPENMAGG1S NM135S	EPENMAGG1S NM135S	Solar	9/1/2024	9/1/2024	9/30/2024	NM	N/A	1	11363-NM-09-2024-092EB394-1 to 1
NM RPS Active	9aa7ddf2-4ffc	W11374	EPENMAGG1S NM136S	EPENMAGG1S NM136S	Solar	9/1/2024	9/1/2024	9/30/2024	NM	N/A	1	11374-NM-09-2024-325901B2-1 to 1
NM RPS Active	9aa7ddf2-4ffc	W11375	EPENMAGG1S NM137S	EPENMAGG1S NM137S	Solar	9/1/2024	9/1/2024	9/30/2024	NM	N/A	2	11375-NM-09-2024-789E39F5-1 to 2
NM RPS Active	9aa7ddf2-4ffc	W11377	EPENMAGG1S NM138S	EPENMAGG1S NM138S	Solar	9/1/2024	9/1/2024	9/30/2024	NM	N/A	1	11377-NM-09-2024-CE700A6F-1 to 1
NM RPS Active	9aa7ddf2-4ffc	W11378	EPENMAGG1S NM139S	EPENMAGG1S NM139S	Solar	9/1/2024	9/1/2024	9/30/2024	NM	N/A	1	11378-NM-09-2024-BE794D59-1 to 1
NM RPS Active	9aa7ddf2-4ffc	W11379	EPENMAGG1S NM140S	EPENMAGG1S NM140S	Solar	9/1/2024	9/1/2024	9/30/2024	NM	N/A	5	11379-NM-09-2024-A844380A-1 to 5
NM RPS Active	9aa7ddf2-4ffc	W11382	EPENMAGG1S NM142S	EPENMAGG1S NM142S	Solar	9/1/2024	9/1/2024	9/30/2024	NM	N/A	1	11382-NM-09-2024-8FBB8C81-1 to 1
NM RPS Active	9aa7ddf2-4ffc	W11383	EPENMAGG1S NM143S	EPENMAGG1S NM143S	Solar	9/1/2024	9/1/2024	9/30/2024	NM	N/A	1	11383-NM-09-2024-6F7A5400-1 to 1
NM RPS Active	9aa7ddf2-4ffc	W11384	EPENMAGG1S NM144S	EPENMAGG1S NM144S	Solar	9/1/2024	9/1/2024	9/30/2024	NM	N/A	4	11384-NM-09-2024-66486B89-1 to 4
NM RPS Active	9aa7ddf2-4ffc	W11968	EPENMAGG1S NM145S	EPENMAGG1S NM145S	Solar	9/1/2024	9/1/2024	9/30/2024	NM	N/A	3	11968-NM-09-2024-91C49908-1 to 3
NM RPS Active	9aa7ddf2-4ffc	W11969	EPENMAGG1S NM146S	EPENMAGG1S NM146S	Solar	9/1/2024	9/1/2024	9/30/2024	NM	N/A	1	11969-NM-09-2024-4254F702-1 to 1
NM RPS Active	9aa7ddf2-4ffc	W11970	EPENMAGG1S NM147S	EPENMAGG1S NM147S	Solar	9/1/2024	9/1/2024	9/30/2024	NM	N/A	2	11970-NM-09-2024-44E36F67-1 to 2
NM RPS Active	9aa7ddf2-4ffc	W11972	EPENMAGG1S NM149S	EPENMAGG1S NM149S	Solar	9/1/2024	9/1/2024	9/30/2024	NM	N/A	2	11972-NM-09-2024-7836685A-1 to 2
NM RPS Active	9aa7ddf2-4ffc	W11973	EPENMAGG1S NM150S	EPENMAGG1S NM150S	Solar	9/1/2024	9/1/2024	9/30/2024	NM	N/A	3	11973-NM-09-2024-B68CBCFE-1 to 3
NM RPS Active	9aa7ddf2-4ffc	W11974	EPENMAGG1S NM151S	EPENMAGG1S NM151S	Solar	9/1/2024	9/1/2024	9/30/2024	NM	N/A	2	11974-NM-09-2024-4B5CFD97-1 to 2
NM RPS Active	9aa7ddf2-4ffc	W11975	EPENMAGG1S NM152S	EPENMAGG1S NM152S	Solar	9/1/2024	9/1/2024	9/30/2024	NM	N/A	2	11975-NM-09-2024-6F789956-1 to 2
NM RPS Active	9aa7ddf2-4ffc	W11976	EPENMAGG1S NM153S	EPENMAGG1S NM153S	Solar	9/1/2024	9/1/2024	9/30/2024	NM	N/A	4	11976-NM-09-2024-DA015952-1 to 4
NM RPS Active	9aa7ddf2-4ffc	W11977	EPENMAGG1S NM154S	EPENMAGG1S NM154S	Solar	9/1/2024	9/1/2024	9/30/2024	NM	N/A	2	11977-NM-09-2024-98D5753F-1 to 2
NM RPS Active	9aa7ddf2-4ffc	W11980	EPENMAGG1S NM156S	EPENMAGG1S NM156S	Solar	9/1/2024	9/1/2024	9/30/2024	NM	N/A	2	11980-NM-09-2024-AAB32645-1 to 2
NM RPS Active	9aa7ddf2-4ffc	W11981	EPENMAGG1S NM157S	EPENMAGG1S NM157S	Solar	9/1/2024	9/1/2024	9/30/2024	NM	N/A	2	11981-NM-09-2024-787D9646-1 to 2
NM RPS Active	9aa7ddf2-4ffc	W11982	EPENMAGG1S NM158S	EPENMAGG1S NM158S	Solar	9/1/2024	9/1/2024	9/30/2024	NM	N/A	1	11982-NM-09-2024-62ED7852-1 to 1
NM RPS Active	9aa7ddf2-4ffc	W12098	EPENMAGG1S NM160S	EPENMAGG1S NM160S	Solar	9/1/2024	9/1/2024	9/30/2024	NM	N/A	1	12098-NM-09-2024-5B37CDA9-1 to 1
NM RPS Active	9aa7ddf2-4ffc	W12099	EPENMAGG1S NM161S	EPENMAGG1S NM161S	Solar	9/1/2024	9/1/2024	9/30/2024	NM	N/A	2	12099-NM-09-2024-2E66065F-1 to 2
NM RPS Active	9aa7ddf2-4ffc	W12100	EPENMAGG1S NM162S	EPENMAGG1S NM162S	Solar	9/1/2024	9/1/2024	9/30/2024	NM	N/A	1	12100-NM-09-2024-432E3B80-1 to 1
NM RPS Active	9aa7ddf2-4ffc	W12101	EPENMAGG1S NM163S	EPENMAGG1S NM163S	Solar	9/1/2024	9/1/2024	9/30/2024	NM	N/A	3	12101-NM-09-2024-0ED716FF-1 to 3
NM RPS Active	9aa7ddf2-4ffc	W12188	EPENMAGG1S NM164S	EPENMAGG1S NM164S	Solar	9/1/2024	9/1/2024	9/30/2024	NM	N/A	1	12188-NM-09-2024-F9B743F3-1 to 1
NM RPS Active	9aa7ddf2-4ffc	W12257	EPENMAGG1S NM166S	EPENMAGG1S NM166S	Solar	9/1/2024	9/1/2024	9/30/2024	NM	N/A	1	12257-NM-09-2024-A145526F-1 to 1
NM RPS Active	9aa7ddf2-4ffc	W12260	EPENMAGG1S NM168S	EPENMAGG1S NM168S	Solar	9/1/2024	9/1/2024	9/30/2024	NM	N/A	1	12260-NM-09-2024-3750599D-1 to 1
NM RPS Active	9aa7ddf2-4ffc	W12643	EPENMAGG1S NM170S	EPENMAGG1S NM170S	Solar	9/1/2024	9/1/2024	9/30/2024	NM	N/A	6	12643-NM-09-2024-38B4A657-1 to 6
NM RPS Active	9aa7ddf2-4ffc	W12646	EPENMAGG1S NM173S	EPENMAGG1S NM173S	Solar	9/1/2024	9/1/2024	9/30/2024	NM	N/A	3	12646-NM-09-2024-37748212-1 to 3
NM RPS Active	9aa7ddf2-4ffc	W12651	EPENMAGG1S NM176S	EPENMAGG1S NM176S	Solar	9/1/2024	9/1/2024	9/30/2024	NM	N/A	2	12651-NM-09-2024-F4B2478D-1 to 2
NM RPS Active	9aa7ddf2-4ffc	W12702	EPENMAGG1S NM177S	EPENMAGG1S NM177S	Solar	9/1/2024	9/1/2024	9/30/2024	NM	N/A	9	12702-NM-09-2024-048D7C5B-1 to 9
NM RPS Active	9aa7ddf2-4ffc	W12703	EPENMAGG1S NM178S	EPENMAGG1S NM178S	Solar	9/1/2024	9/1/2024	9/30/2024	NM	N/A	4	12703-NM-09-2024-A87F6BEE-1 to 4
NM RPS Active	9aa7ddf2-4ffc	W12704	EPENMAGG1S NM179S	EPENMAGG1S NM179S	Solar	9/1/2024	9/1/2024	9/30/2024	NM	N/A	3	12704-NM-09-2024-47A73CBE-1 to 3
NM RPS Active	9aa7ddf2-4ffc	W12744	EPENMAGG1S NM180S	EPENMAGG1S NM180S	Solar	9/1/2024	9/1/2024	9/30/2024	NM	N/A	1	12744-NM-09-2024-FB1BAA1D-1 to 1
NM RPS Active	9aa7ddf2-4ffc	W12745	EPENMAGG1S NM181S	EPENMAGG1S NM181S	Solar	9/1/2024	9/1/2024	9/30/2024	NM	N/A	2	12745-NM-09-2024-BB390B54-1 to 2
NM RPS Active	9aa7ddf2-4ffc	W13207	EPENMAGG1S NM182S	EPENMAGG1S NM182S	Solar	9/1/2024	9/1/2024	9/30/2024	NM	N/A	1	13207-NM-09-2024-B9531907-1 to 1
NM RPS Active	9aa7ddf2-4ffc	W13208	EPENMAGG1S NM183S	EPENMAGG1S NM183S	Solar	9/1/2024	9/1/2024	9/30/2024	NM	N/A	1	13208-NM-09-2024-FFDD1F22-1 to 1
NM RPS Active	9aa7ddf2-4ffc	W13211	EPENMAGG1S NM185S	EPENMAGG1S NM185S	Solar	9/1/2024	9/1/2024	9/30/2024	NM	N/A	6	13211-NM-09-2024-30DC7759-1 to 6
NM RPS Active	9aa7ddf2-4ffc	W13615	EPENMAGG1S NM186S	EPENMAGG1S NM186S	Solar	9/1/2024	9/1/2024	9/30/2024	NM	N/A	3	13615-NM-09-2024-ADE5B515-1 to 3

Account	Account ID	WREGIS GU ID	Unit Name	Facility Name	Fuel Type	Vintage	Generation Start Date	Generation End Date	Generator Location	Eligility	Quantity (RECs)	Serial Numbers
NM RPS Active	9aa7ddf2-4ffc	W13616	EPENMAGG1S NM187S	EPENMAGG1S NM187S	Solar	9/1/2024	9/1/2024	9/30/2024	NM	N/A	1	13616-NM-09-2024-E5A2CCF5-1 to 1
NM RPS Active	9aa7ddf2-4ffc	W13701	EPENMAGG1S NM188S	EPENMAGG1S NM188S	Solar	9/1/2024	9/1/2024	9/30/2024	NM	N/A	4	13701-NM-09-2024-BFBB41AB-1 to 4
NM RPS Active	9aa7ddf2-4ffc	W13702	EPENMAGG1S NM189S	EPENMAGG1S NM189S	Solar	9/1/2024	9/1/2024	9/30/2024	NM	N/A	1	13702-NM-09-2024-081BE19C-1 to 1
NM RPS Active	9aa7ddf2-4ffc	W13799	EPENMAGG1S NM190S	EPENMAGG1S NM190S	Solar	9/1/2024	9/1/2024	9/30/2024	NM	N/A	2	13799-NM-09-2024-51B7A154-1 to 2
NM RPS Active	9aa7ddf2-4ffc	W13801	EPENMAGG1S NM191S	EPENMAGG1S NM191S	Solar	9/1/2024	9/1/2024	9/30/2024	NM	N/A	1	13801-NM-09-2024-5176D16B-1 to 1
NM RPS Active	9aa7ddf2-4ffc	W13802	EPENMAGG1S NM192S	EPENMAGG1S NM192S	Solar	9/1/2024	9/1/2024	9/30/2024	NM	N/A	3	13802-NM-09-2024-68886568-1 to 3
NM RPS Active	9aa7ddf2-4ffc	W13803	EPENMAGG1S NM193S	EPENMAGG1S NM193S	Solar	9/1/2024	9/1/2024	9/30/2024	NM	N/A	3	13803-NM-09-2024-7F49639F-1 to 3
NM RPS Active	9aa7ddf2-4ffc	W13804	EPENMAGG1S NM194S	EPENMAGG1S NM194S	Solar	9/1/2024	9/1/2024	9/30/2024	NM	N/A	2	13804-NM-09-2024-523B85CC-1 to 2
NM RPS Active	9aa7ddf2-4ffc	W13897	EPENMAGG1S NM195S	EPENMAGG1S NM195S	Solar	9/1/2024	9/1/2024	9/30/2024	NM	N/A	1	13897-NM-09-2024-1F58B7A0-1 to 1
NM RPS Active	9aa7ddf2-4ffc	W13898	EPENMAGG1S NM196S	EPENMAGG1S NM196S	Solar	9/1/2024	9/1/2024	9/30/2024	NM	N/A	4	13898-NM-09-2024-0FD17EE1-1 to 4
NM RPS Active	9aa7ddf2-4ffc	W13973	EPENMAGG1S NM198S	EPENMAGG1S NM198S	Solar	9/1/2024	9/1/2024	9/30/2024	NM	N/A	1	13973-NM-09-2024-DB83D916-1 to 1
NM RPS Active	9aa7ddf2-4ffc	W13975	EPENMAGG1S NM199S	EPENMAGG1S NM199S	Solar	9/1/2024	9/1/2024	9/30/2024	NM	N/A	2	13975-NM-09-2024-25230D6B-1 to 2
NM RPS Active	9aa7ddf2-4ffc	W14044	EPENMAGG1S NM200S	EPENMAGG1S NM200S	Solar	9/1/2024	9/1/2024	9/30/2024	NM	N/A	3	14044-NM-09-2024-FC2E1AC2-1 to 3
NM RPS Active	9aa7ddf2-4ffc	W14045	EPENMAGG1S NM201S	EPENMAGG1S NM201S	Solar	9/1/2024	9/1/2024	9/30/2024	NM	SMUD	3	14045-NM-09-2024-6D1AFC51-1 to 3
NM RPS Active	9aa7ddf2-4ffc	W14046	EPENMAGG1S NM202S	EPENMAGG1S NM202S	Solar	9/1/2024	9/1/2024	9/30/2024	NM	N/A	1	14046-NM-09-2024-64B7FC20-1 to 1
NM RPS Active	9aa7ddf2-4ffc	W14049	EPENMAGG1S NM204S	EPENMAGG1S NM204S	Solar	9/1/2024	9/1/2024	9/30/2024	NM	SMUD	3	14049-NM-09-2024-17B0712D-1 to 3
NM RPS Active	9aa7ddf2-4ffc	W14225	N/A	EPENMAGG1S NM205S	Solar	9/1/2024	9/1/2024	9/30/2024	NM	N/A	4	14225-NM-09-2024-C1BDA955-1 to 4
NM RPS Active	9aa7ddf2-4ffc	W14230	N/A	EPENMAGG1S NM206S	Solar	9/1/2024	9/1/2024	9/30/2024	NM	N/A	3	14230-NM-09-2024-B3BBDED6-1 to 3
NM RPS Active	9aa7ddf2-4ffc	W14334	N/A	EPENMAGG1S NM207S	Solar	9/1/2024	9/1/2024	9/30/2024	NM	N/A	2	14334-NM-09-2024-520B23B7-1 to 2
NM RPS Active	9aa7ddf2-4ffc	W15470	N/A	EPENMAGG1S NM208S	Solar	9/1/2024	9/1/2024	9/30/2024	NM	N/A	5	15470-NM-09-2024-823E9537-1 to 5
NM RPS Active	9aa7ddf2-4ffc	W15471	N/A	EPENMAGG1S NM209S	Solar	9/1/2024	9/1/2024	9/30/2024	NM	N/A	2	15471-NM-09-2024-89C6E06C-1 to 2
NM RPS Active	9aa7ddf2-4ffc	W15475	N/A	EPENMAGG1S NM213S	Solar	9/1/2024	9/1/2024	9/30/2024	NM	N/A	3	15475-NM-09-2024-D1EA08DF-1 to 3
NM RPS Active	9aa7ddf2-4ffc	W15517	N/A	EPENMAGG1S NM214S	Solar	9/1/2024	9/1/2024	9/30/2024	NM	N/A	2	15517-NM-09-2024-786BD288-1 to 2
NM RPS Active	9aa7ddf2-4ffc	W15518	N/A	EPENMAGG1S NM215S	Solar	9/1/2024	9/1/2024	9/30/2024	NM	N/A	3	15518-NM-09-2024-88632B98-1 to 3
NM RPS Active	9aa7ddf2-4ffc	W15519	N/A	EPENMAGG1S NM216S	Solar	9/1/2024	9/1/2024	9/30/2024	NM	N/A	2	15519-NM-09-2024-A6AEEFA8-1 to 2
NM RPS Active	9aa7ddf2-4ffc	W15520	N/A	EPENMAGG1S NM217S	Solar	9/1/2024	9/1/2024	9/30/2024	NM	N/A	2	15520-NM-09-2024-2E948A40-1 to 2
NM RPS Active	9aa7ddf2-4ffc	W15521	N/A	EPENMAGG1S NM218S	Solar	9/1/2024	9/1/2024	9/30/2024	NM	N/A	1	15521-NM-09-2024-22DA6466-1 to 1
NM RPS Active	9aa7ddf2-4ffc	W15533	N/A	EPENMAGG1S NM219S	Solar	9/1/2024	9/1/2024	9/30/2024	NM	N/A	1	15533-NM-09-2024-63D66630-1 to 1
NM RPS Active	9aa7ddf2-4ffc	W15702	N/A	EPENMAGG1S NM220S	Solar	9/1/2024	9/1/2024	9/30/2024	NM	N/A	3	15702-NM-09-2024-89BC409F-1 to 3
NM RPS Active	9aa7ddf2-4ffc	W15703	N/A	EPENMAGG1S NM221S	Solar	9/1/2024	9/1/2024	9/30/2024	NM	N/A	7	15703-NM-09-2024-4CADD3A8-1 to 7
NM RPS Active	9aa7ddf2-4ffc	W15704	N/A	EPENMAGG1S NM222S	Solar	9/1/2024	9/1/2024	9/30/2024	NM	N/A	3	15704-NM-09-2024-81A72C2F-1 to 3
NM RPS Active	9aa7ddf2-4ffc	W15705	N/A	EPENMAGG1S NM223S	Solar	9/1/2024	9/1/2024	9/30/2024	NM	N/A	4	15705-NM-09-2024-9A28631C-1 to 4
NM RPS Active	9aa7ddf2-4ffc	W16065	N/A	EPENMAGG1S NM224S	Solar	9/1/2024	9/1/2024	9/30/2024	NM	N/A	1	16065-NM-09-2024-A38F213A-1 to 1
NM RPS Active	9aa7ddf2-4ffc	W16066	N/A	EPENMAGG1S NM225S	Solar	9/1/2024	9/1/2024	9/30/2024	NM	N/A	2	16066-NM-09-2024-C0F02762-1 to 2
NM RPS Active	9aa7ddf2-4ffc	W16490	N/A	EPENMAGG1S NM227S	Solar	9/1/2024	9/1/2024	9/30/2024	NM	N/A	4	16490-NM-09-2024-91AC273A-1 to 4
NM RPS Active	9aa7ddf2-4ffc	W16492	N/A	EPENMAGG1S NM229S	Solar	9/1/2024	9/1/2024	9/30/2024	NM	N/A	1	16492-NM-09-2024-E3114D40-1 to 1
NM RPS Active	9aa7ddf2-4ffc	W16493	N/A	EPENMAGG1S NM230S	Solar	9/1/2024	9/1/2024	9/30/2024	NM	N/A	2	16493-NM-09-2024-92FD169B-1 to 2
NM RPS Active	9aa7ddf2-4ffc	W16494	N/A	EPENMAGG1S NM231S	Solar	9/1/2024	9/1/2024	9/30/2024	NM	N/A	4	16494-NM-09-2024-DB809BA0-1 to 4
NM RPS Active	9aa7ddf2-4ffc	W17425	N/A	EPENMAGG1S NM232S	Solar	9/1/2024	9/1/2024	9/30/2024	NM	N/A	2	17425-NM-09-2024-A2D2A590-1 to 2
NM RPS Active	9aa7ddf2-4ffc	W17426	N/A	EPENMAGG1S NM233S	Solar	9/1/2024	9/1/2024	9/30/2024	NM	N/A	5	17426-NM-09-2024-990BBCB8-1 to 5
NM RPS Active	9aa7ddf2-4ffc	W17427	N/A	EPENMAGG1S NM235S	Solar	9/1/2024	9/1/2024	9/30/2024	NM	N/A	1	17427-NM-09-2024-C6335486-1 to 1
NM RPS Active	9aa7ddf2-4ffc	W17428	N/A	EPENMAGG1S NM236S	Solar	9/1/2024	9/1/2024	9/30/2024	NM	N/A	3	17428-NM-09-2024-F0CB0C7B-1 to 3
NM RPS Active	9aa7ddf2-4ffc	W17429	N/A	EPENMAGG1S NM237S	Solar	9/1/2024	9/1/2024	9/30/2024	NM	N/A	5	17429-NM-09-2024-01A017F1-1 to 5
NM RPS Active	9aa7ddf2-4ffc	W17430	N/A	EPENMAGG1S NM238S	Solar	9/1/2024	9/1/2024	9/30/2024	NM	N/A	1	17430-NM-09-2024-63FF240A-1 to 1
NM RPS Active	9aa7ddf2-4ffc	W17431	N/A	EPENMAGG1S NM239S	Solar	9/1/2024	9/1/2024	9/30/2024	NM	N/A	3	17431-NM-09-2024-1E582BA6-1 to 3
NM RPS Active	9aa7ddf2-4ffc	W17432	N/A	EPENMAGG1S NM240S	Solar	9/1/2024	9/1/2024	9/30/2024	NM	N/A	3	17432-NM-09-2024-3DA964E5-1 to 3
NM RPS Active	9aa7ddf2-4ffc	W17433	N/A	EPENMAGG1S NM241S	Solar	9/1/2024	9/1/2024	9/30/2024	NM	N/A	5	17433-NM-09-2024-3C835E9B-1 to 5
NM RPS Active	9aa7ddf2-4ffc	W17434	N/A	EPENMAGG1S NM242S	Solar	9/1/2024	9/1/2024	9/30/2024	NM	N/A	1	17434-NM-09-2024-9B4D8B80-1 to 1
NM RPS Active	9aa7ddf2-4ffc	W17435	N/A	EPENMAGG1S NM243S	Solar	9/1/2024	9/1/2024	9/30/2024	NM	N/A	1	17435-NM-09-2024-6F9C3F0D-1 to 1
NM RPS Active	9aa7ddf2-4ffc	W17436	N/A	EPENMAGG1S NM244S	Solar	9/1/2024	9/1/2024	9/30/2024	NM	N/A	3	17436-NM-09-2024-44A30112-1 to 3
NM RPS Active	9aa7ddf2-4ffc	W17546	N/A	EPENMAGG1S NM245S	Solar	9/1/2024	9/1/2024	9/30/2024	NM	N/A	3	17546-NM-09-2024-E1F95330-1 to 3
NM RPS Active	9aa7ddf2-4ffc	W17824	N/A	EPENMAGG1S NM246S	Solar	9/1/2024	9/1/2024	9/30/2024	NM	N/A	1	17824-NM-09-2024-65E8E983-1 to 1
NM RPS Active	9aa7ddf2-4ffc	W17825	N/A	EPENMAGG1S NM247S	Solar	9/1/2024	9/1/2024	9/30/2024	NM	N/A	2	17825-NM-09-2024-120CB6C0-1 to 2
NM RPS Active	9aa7ddf2-4ffc	W18165	N/A	EPENMAGG1S NM248S	Solar	9/1/2024	9/1/2024	9/30/2024	NM	N/A	3	18165-NM-09-2024-4C2DA6AA-1 to 3
NM RPS Active	9aa7ddf2-4ffc	W18166	N/A	EPENMAGG1S NM249S	Solar	9/1/2024	9/1/2024	9/30/2024	NM	N/A	3	18166-NM-09-2024-37BB0F0A-1 to 3
NM RPS Active	9aa7ddf2-4ffc	W18167	N/A	EPENMAGG1S NM250S	Solar	9/1/2024	9/1/2024	9/30/2024	NM	N/A	2	18167-NM-09-2024-70732CAC-1 to 2
NM RPS Active	9aa7ddf2-4ffc	W18279	N/A	EPENMAGG1S NM251S	Solar	9/1/2024	9/1/2024	9/30/2024	NM	N/A	1	18279-NM-09-2024-EE4D31E3-1 to 1
NM RPS Active	9aa7ddf2-4ffc	W18280	N/A	EPENMAGG1S NM252S	Solar	9/1/2024	9/1/2024	9/30/2024	NM	N/A	4	18280-NM-09-2024-27D8C16E-1 to 4

Account	Account ID	WREGIS GU ID	Unit Name	Facility Name	Fuel Type	Vintage	Generation Start Date	Generation End Date	Generator Location	Eligility	Quantity (RECs)	Serial Numbers
NM RPS Active	9aa7ddf2-4ffc	W18547	N/A	EPENMAGG1S NM253S	Solar	9/1/2024	9/1/2024	9/30/2024	NM	N/A	1	18547-NM-09-2024-134915DC-1 to 1
NM RPS Active	9aa7ddf2-4ffc	W18548	N/A	EPENMAGG1S NM254S	Solar	9/1/2024	9/1/2024	9/30/2024	NM	N/A	15	18548-NM-09-2024-B56223D5-1 to 15
NM RPS Active	9aa7ddf2-4ffc	W18750	N/A	EPENMAGG1S NM255S	Solar	9/1/2024	9/1/2024	9/30/2024	NM	N/A	2	18750-NM-09-2024-E9BA347C-1 to 2
NM RPS Active	9aa7ddf2-4ffc	W19059	N/A	EPENMAGG1S NM256S	Solar	9/1/2024	9/1/2024	9/30/2024	NM	N/A	2	19059-NM-09-2024-6A4F7462-1 to 2
NM RPS Active	9aa7ddf2-4ffc	W20226	N/A	EPENMAGG1S NM258S	Solar	9/1/2024	9/1/2024	9/30/2024	NM	N/A	2	20226-NM-09-2024-6B3B8947-1 to 2
NM RPS Active	9aa7ddf2-4ffc	W20227	N/A	EPENMAGG1S NM259S	Solar	9/1/2024	9/1/2024	9/30/2024	NM	N/A	2	20227-NM-09-2024-21F1E83C-1 to 2
NM RPS Active	9aa7ddf2-4ffc	W20660	N/A	EPENMAGG1S NM260S	Solar	9/1/2024	9/1/2024	9/30/2024	NM	N/A	1	20660-NM-09-2024-1C107EF3-1 to 1
NM RPS Active	9aa7ddf2-4ffc	W12647	EPE NM174S - City of Las Cruces - Water Treatment Facilities	EPE NM174S	Solar	10/1/2024	10/1/2024	10/31/2024	NM	N/A	15	12647-NM-10-2024-94CAD1B5-1 to 15
NM RPS Active	9aa7ddf2-4ffc	W12650	EPE NM175S - City of Las Cruces - Utilities - Waste Water	EPE NM175S	Solar	10/1/2024	10/1/2024	10/31/2024	NM	N/A	7	12650-NM-10-2024-1896E62A-1 to 7
NM RPS Active	9aa7ddf2-4ffc	W3622	EPENMAGG1S NM001S	EPENMAGG1S NM001S	Solar	10/1/2024	10/1/2024	10/31/2024	NM	N/A	5	3622-NM-10-2024-FD367F30-1 to 5
NM RPS Active	9aa7ddf2-4ffc	W3624	EPENMAGG1S NM002S	EPENMAGG1S NM002S	Solar	10/1/2024	10/1/2024	10/31/2024	NM	N/A	3	3624-NM-10-2024-B3D0C324-1 to 3
NM RPS Active	9aa7ddf2-4ffc	W3637	EPENMAGG1S NM003S	EPENMAGG1S NM003S	Solar	10/1/2024	10/1/2024	10/31/2024	NM	N/A	4	3637-NM-10-2024-201AC7F0-1 to 4
NM RPS Active	9aa7ddf2-4ffc	W3638	EPENMAGG1S NM004S	EPENMAGG1S NM004S	Solar	10/1/2024	10/1/2024	10/31/2024	NM	N/A	2	3638-NM-10-2024-73E6FEF4-1 to 2
NM RPS Active	9aa7ddf2-4ffc	W3639	EPENMAGG1s NM005S	EPENMAGG1s NM005S	Solar	10/1/2024	10/1/2024	10/31/2024	NM	N/A	2	3639-NM-10-2024-FDE3D75C-1 to 2
NM RPS Active	9aa7ddf2-4ffc	W3641	EPENMAGG1s NM007S	EPENMAGG1s NM007S	Solar	10/1/2024	10/1/2024	10/31/2024	NM	N/A	2	3641-NM-10-2024-DC1FC9AC-1 to 2
NM RPS Active	9aa7ddf2-4ffc	W3642	EPENMAGG1s NM008S	EPENMAGG1s NM008S	Solar	10/1/2024	10/1/2024	10/31/2024	NM	N/A	3	3642-NM-10-2024-17831B65-1 to 3
NM RPS Active	9aa7ddf2-4ffc	W3643	EPENMAGG1s NM009S	EPENMAGG1s NM009S	Solar	10/1/2024	10/1/2024	10/31/2024	NM	N/A	2	3643-NM-10-2024-0D0AF4EA-1 to 2
NM RPS Active	9aa7ddf2-4ffc	W3644	EPENMAGG1S NM010S	EPENMAGG1S NM010S	Solar	10/1/2024	10/1/2024	10/31/2024	NM	N/A	1	3644-NM-10-2024-460C2E85-1 to 1
NM RPS Active	9aa7ddf2-4ffc	W3645	EPENMAGG1S NM011S	EPENMAGG1S NM011S	Solar	10/1/2024	10/1/2024	10/31/2024	NM	N/A	1	3645-NM-10-2024-24912E23-1 to 1
NM RPS Active	9aa7ddf2-4ffc	W3646	EPENMAGG1S NM012S	EPENMAGG1S NM012S	Solar	10/1/2024	10/1/2024	10/31/2024	NM	N/A	1	3646-NM-10-2024-BF4E1196-1 to 1
NM RPS Active	9aa7ddf2-4ffc	W3647	EPENMAGG1S NM013S	EPENMAGG1S NM013S	Solar	10/1/2024	10/1/2024	10/31/2024	NM	N/A	2	3647-NM-10-2024-A7352DF6-1 to 2
NM RPS Active	9aa7ddf2-4ffc	W3650	EPENMAGG1S NM016S	EPENMAGG1S NM016S	Solar	10/1/2024	10/1/2024	10/31/2024	NM	N/A	2	3650-NM-10-2024-B79640B8-1 to 2
NM RPS Active	9aa7ddf2-4ffc	W3651	EPENMAGG1S NM017S	EPENMAGG1S NM017S	Solar	10/1/2024	10/1/2024	10/31/2024	NM	N/A	2	3651-NM-10-2024-2F931B6F-1 to 2
NM RPS Active	9aa7ddf2-4ffc	W3652	EPENMAGG1S NM018S	EPENMAGG1S NM018S	Solar	10/1/2024	10/1/2024	10/31/2024	NM	N/A	4	3652-NM-10-2024-047977E8-1 to 4
NM RPS Active	9aa7ddf2-4ffc	W3653	EPENMAGG1S NM019S	EPENMAGG1S NM019S	Solar	10/1/2024	10/1/2024	10/31/2024	NM	N/A	2	3653-NM-10-2024-3E928A6B-1 to 2
NM RPS Active	9aa7ddf2-4ffc	W3654	EPENMAGG1S NM020S	EPENMAGG1S NM020S	Solar	10/1/2024	10/1/2024	10/31/2024	NM	N/A	2	3654-NM-10-2024-5C57949E-1 to 2
NM RPS Active	9aa7ddf2-4ffc	W3655	EPENMAGG1S NM021S	EPENMAGG1S NM021S	Solar	10/1/2024	10/1/2024	10/31/2024	NM	N/A	4	3655-NM-10-2024-DF07E17B-1 to 4
NM RPS Active	9aa7ddf2-4ffc	W3656	EPENMAGG1S NM022S	EPENMAGG1S NM022S	Solar	10/1/2024	10/1/2024	10/31/2024	NM	N/A	4	3656-NM-10-2024-4781518E-1 to 4
NM RPS Active	9aa7ddf2-4ffc	W3657	EPENMAGG1S NM023S	EPENMAGG1S NM023S	Solar	10/1/2024	10/1/2024	10/31/2024	NM	N/A	5	3657-NM-10-2024-2E37086B-1 to 5
NM RPS Active	9aa7ddf2-4ffc	W3658	EPENMAGG1S NM024S	EPENMAGG1S NM024S	Solar	10/1/2024	10/1/2024	10/31/2024	NM	N/A	2	3658-NM-10-2024-6D4C83C0-1 to 2
NM RPS Active	9aa7ddf2-4ffc	W3659	EPENMAGG1S NM025S	EPENMAGG1S NM025S	Solar	10/1/2024	10/1/2024	10/31/2024	NM	N/A	3	3659-NM-10-2024-3F3694A7-1 to 3
NM RPS Active	9aa7ddf2-4ffc	W3660	EPENMAGG1S NM026S	EPENMAGG1S NM026S	Solar	10/1/2024	10/1/2024	10/31/2024	NM	N/A	3	3660-NM-10-2024-E723A018-1 to 3
NM RPS Active	9aa7ddf2-4ffc	W3838	EPENMAGG1S NM027S	EPENMAGG1S NM027S	Solar	10/1/2024	10/1/2024	10/31/2024	NM	N/A	5	3838-NM-10-2024-8536EA71-1 to 5
NM RPS Active	9aa7ddf2-4ffc	W3839	EPENMAGG1S NM028S	EPENMAGG1S NM028S	Solar	10/1/2024	10/1/2024	10/31/2024	NM	N/A	1	3839-NM-10-2024-0DD94887-1 to 1
NM RPS Active	9aa7ddf2-4ffc	W3946	EPENMAGG1S NM029S	EPENMAGG1S NM029S	Solar	10/1/2024	10/1/2024	10/31/2024	NM	N/A	1	3946-NM-10-2024-F514EFBF-1 to 1
NM RPS Active	9aa7ddf2-4ffc	W3947	EPENMAGG1S NM030S	EPENMAGG1S NM030S	Solar	10/1/2024	10/1/2024	10/31/2024	NM	N/A	1	3947-NM-10-2024-7BD54BDF-1 to 1
NM RPS Active	9aa7ddf2-4ffc	W3948	EPENMAGG1S NM031S	EPENMAGG1S NM031S	Solar	10/1/2024	10/1/2024	10/31/2024	NM	N/A	1	3948-NM-10-2024-0695010F-1 to 1
NM RPS Active	9aa7ddf2-4ffc	W3949	EPENMAGG1S NM032S	EPENMAGG1S NM032S	Solar	10/1/2024	10/1/2024	10/31/2024	NM	N/A	2	3949-NM-10-2024-CA11332D-1 to 2
NM RPS Active	9aa7ddf2-4ffc	W3950	EPENMAGG1S NM033S	EPENMAGG1S NM033S	Solar	10/1/2024	10/1/2024	10/31/2024	NM	N/A	1	3950-NM-10-2024-BB344978-1 to 1
NM RPS Active	9aa7ddf2-4ffc	W3951	EPENMAGG1S NM034S	EPENMAGG1S NM034S	Solar	10/1/2024	10/1/2024	10/31/2024	NM	N/A	1	3951-NM-10-2024-DAA40A4A-1 to 1
NM RPS Active	9aa7ddf2-4ffc	W3952	EPENMAGG1S NM035S	EPENMAGG1S NM035S	Solar	10/1/2024	10/1/2024	10/31/2024	NM	N/A	4	3952-NM-10-2024-330CC9F3-1 to 4
NM RPS Active	9aa7ddf2-4ffc	W4101	EPENMAGG1S NM036S	EPENMAGG1S NM036S	Solar	10/1/2024	10/1/2024	10/31/2024	NM	N/A	3	4101-NM-10-2024-9A33AD35-1 to 3
NM RPS Active	9aa7ddf2-4ffc	W4121	EPENMAGG1S NM037S	EPENMAGG1S NM037S	Solar	10/1/2024	10/1/2024	10/31/2024	NM	N/A	4	4121-NM-10-2024-65A017FB-1 to 4
NM RPS Active	9aa7ddf2-4ffc	W4221	EPENMAGG1S NM038S	EPENMAGG1S NM038S	Solar	10/1/2024	10/1/2024	10/31/2024	NM	N/A	6	4221-NM-10-2024-57F19F09-1 to 6
NM RPS Active	9aa7ddf2-4ffc	W4270	EPENMAGG1S NM039S	EPENMAGG1S NM039S	Solar	10/1/2024	10/1/2024	10/31/2024	NM	N/A	4	4270-NM-10-2024-9B43BC44-1 to 4
NM RPS Active	9aa7ddf2-4ffc	W4412	EPENMAGG1S NM041S	EPENMAGG1S NM041S	Solar	10/1/2024	10/1/2024	10/31/2024	NM	N/A	2	4412-NM-10-2024-04A6AE18-1 to 2
NM RPS Active	9aa7ddf2-4ffc	W4437	EPENMAGG1S NM042S	EPENMAGG1S NM042S	Solar	10/1/2024	10/1/2024	10/31/2024	NM	N/A	3	4437-NM-10-2024-8438D3FC-1 to 3
NM RPS Active	9aa7ddf2-4ffc	W4459	EPENMAGG1S NM043S	EPENMAGG1S NM043S	Solar	10/1/2024	10/1/2024	10/31/2024	NM	N/A	6	4459-NM-10-2024-7A5CBF21-1 to 6
NM RPS Active	9aa7ddf2-4ffc	W4507	EPENMAGG1S NM044S	EPENMAGG1S NM044S	Solar	10/1/2024	10/1/2024	10/31/2024	NM	N/A	5	4507-NM-10-2024-A70AF7DB-1 to 5
NM RPS Active	9aa7ddf2-4ffc	W4649	EPENMAGG1S NM045S	EPENMAGG1S NM045S	Solar	10/1/2024	10/1/2024	10/31/2024	NM	N/A	2	4649-NM-10-2024-F3ED6944-1 to 2
NM RPS Active	9aa7ddf2-4ffc	W4704	EPENMAGG1S NM046S	EPENMAGG1S NM046S	Solar	10/1/2024	10/1/2024	10/31/2024	NM	N/A	5	4704-NM-10-2024-2AED7084-1 to 5
NM RPS Active	9aa7ddf2-4ffc	W4732	EPENMAGG1S NM047S	EPENMAGG1S NM047S	Solar	10/1/2024	10/1/2024	10/31/2024	NM	N/A	2	4732-NM-10-2024-99E2C6BE-1 to 2
NM RPS Active	9aa7ddf2-4ffc	W4806	EPENMAGG1S NM048S	EPENMAGG1S NM048S	Solar	10/1/2024	10/1/2024	10/31/2024	NM	N/A	4	4806-NM-10-2024-7B3D6363-1 to 4
NM RPS Active	9aa7ddf2-4ffc	W4833	EPENMAGG1S NM049S	EPENMAGG1S NM049S	Solar	10/1/2024	10/1/2024	10/31/2024	NM	N/A	1	4833-NM-10-2024-58D8B42C-1 to 1

Account	Account ID	WREGIS GU ID	Unit Name	Facility Name	Fuel Type	Vintage	Generation Start Date	Generation End Date	Generator Location	Eligility	Quantity (RECs)	Serial Numbers
NM RPS Active	9aa7ddf2-4ffc	W4842	EPENMAGG1S NM050S	EPENMAGG1S NM050S	Solar	10/1/2024	10/1/2024	10/31/2024	NM	N/A	3	4842-NM-10-2024-2C89C4BC-1 to 3
NM RPS Active	9aa7ddf2-4ffc	W4843	EPENMAGG1S NM051S	EPENMAGG1S NM051S	Solar	10/1/2024	10/1/2024	10/31/2024	NM	N/A	2	4843-NM-10-2024-F00B9CB1-1 to 2
NM RPS Active	9aa7ddf2-4ffc	W4961	EPENMAGG1S NM052S	EPENMAGG1S NM052S	Solar	10/1/2024	10/1/2024	10/31/2024	NM	N/A	2	4961-NM-10-2024-5A5DFBA5-1 to 2
NM RPS Active	9aa7ddf2-4ffc	W5022	EPENMAGG1S NM053S	EPENMAGG1S NM053S	Solar	10/1/2024	10/1/2024	10/31/2024	NM	N/A	4	5022-NM-10-2024-F48B4611-1 to 4
NM RPS Active	9aa7ddf2-4ffc	W5071	EPENMAGG1S NM054S	EPENMAGG1S NM054S	Solar	10/1/2024	10/1/2024	10/31/2024	NM	N/A	2	5071-NM-10-2024-16AA5E7B-1 to 2
NM RPS Active	9aa7ddf2-4ffc	W5080	EPENMAGG1S NM056S	EPENMAGG1S NM056S	Solar	10/1/2024	10/1/2024	10/31/2024	NM	N/A	3	5080-NM-10-2024-08D07A88-1 to 3
NM RPS Active	9aa7ddf2-4ffc	W5111	EPENMAGG1S NM057S	EPENMAGG1S NM057S	Solar	10/1/2024	10/1/2024	10/31/2024	NM	N/A	4	5111-NM-10-2024-8B30DA1F-1 to 4
NM RPS Active	9aa7ddf2-4ffc	W5112	EPENMAGG1S NM058S	EPENMAGG1S NM058S	Solar	10/1/2024	10/1/2024	10/31/2024	NM	N/A	3	5112-NM-10-2024-B2C958F4-1 to 3
NM RPS Active	9aa7ddf2-4ffc	W5280	EPENMAGG1S NM059S	EPENMAGG1S NM059S	Solar	10/1/2024	10/1/2024	10/31/2024	NM	N/A	3	5280-NM-10-2024-2C745882-1 to 3
NM RPS Active	9aa7ddf2-4ffc	W5318	EPENMAGG1S NM060S	EPENMAGG1S NM060S	Solar	10/1/2024	10/1/2024	10/31/2024	NM	SMUD	1	5318-NM-10-2024-05E0A543-1 to 1
NM RPS Active	9aa7ddf2-4ffc	W5320	EPENMAGG1S NM062S	EPENMAGG1S NM062S	Solar	10/1/2024	10/1/2024	10/31/2024	NM	N/A	3	5320-NM-10-2024-57649AA8-1 to 3
NM RPS Active	9aa7ddf2-4ffc	W5379	EPENMAGG1S NM063S	EPENMAGG1S NM063S	Solar	10/1/2024	10/1/2024	10/31/2024	NM	N/A	2	5379-NM-10-2024-6FA90175-1 to 2
NM RPS Active	9aa7ddf2-4ffc	W5469	EPENMAGG1S NM064S	EPENMAGG1S NM064S	Solar	10/1/2024	10/1/2024	10/31/2024	NM	N/A	2	5469-NM-10-2024-1C6871A8-1 to 2
NM RPS Active	9aa7ddf2-4ffc	W5547	EPENMAGG1S NM065S	EPENMAGG1S NM065S	Solar	10/1/2024	10/1/2024	10/31/2024	NM	N/A	4	5547-NM-10-2024-C1210755-1 to 4
NM RPS Active	9aa7ddf2-4ffc	W5652	EPENMAGG1S NM067S	EPENMAGG1S NM067S	Solar	10/1/2024	10/1/2024	10/31/2024	NM	N/A	2	5652-NM-10-2024-4B5DB773-1 to 2
NM RPS Active	9aa7ddf2-4ffc	W5742	EPENMAGG1S NM070S	EPENMAGG1S NM070S	Solar	10/1/2024	10/1/2024	10/31/2024	NM	N/A	3	5742-NM-10-2024-15D42700-1 to 3
NM RPS Active	9aa7ddf2-4ffc	W5790	EPENMAGG1S NM071S	EPENMAGG1S NM071S	Solar	10/1/2024	10/1/2024	10/31/2024	NM	N/A	10	5790-NM-10-2024-797AF426-1 to 10
NM RPS Active	9aa7ddf2-4ffc	W5869	EPENMAGG1S NM073S	EPENMAGG1S NM073S	Solar	10/1/2024	10/1/2024	10/31/2024	NM	N/A	2	5869-NM-10-2024-45B85D05-1 to 2
NM RPS Active	9aa7ddf2-4ffc	W7116	EPENMAGG1S NM074S	EPENMAGG1S NM074S	Solar	10/1/2024	10/1/2024	10/31/2024	NM	N/A	2	7116-NM-10-2024-23E2F687-1 to 2
NM RPS Active	9aa7ddf2-4ffc	W7117	EPENMAGG1S NM075S	EPENMAGG1S NM075S	Solar	10/1/2024	10/1/2024	10/31/2024	NM	N/A	4	7117-NM-10-2024-2619A7C2-1 to 4
NM RPS Active	9aa7ddf2-4ffc	W7118	EPENMAGG1S NM076S	EPENMAGG1S NM076S	Solar	10/1/2024	10/1/2024	10/31/2024	NM	N/A	2	7118-NM-10-2024-4C91C6D5-1 to 2
NM RPS Active	9aa7ddf2-4ffc	W7119	EPENMAGG1S NM077S	EPENMAGG1S NM077S	Solar	10/1/2024	10/1/2024	10/31/2024	NM	N/A	7	7119-NM-10-2024-6E204BE6-1 to 7
NM RPS Active	9aa7ddf2-4ffc	W7120	EPENMAGG1S NM078S	EPENMAGG1S NM078S	Solar	10/1/2024	10/1/2024	10/31/2024	NM	N/A	2	7120-NM-10-2024-DDB8CD31-1 to 2
NM RPS Active	9aa7ddf2-4ffc	W7121	EPENMAGG1S NM079S	EPENMAGG1S NM079S	Solar	10/1/2024	10/1/2024	10/31/2024	NM	N/A	3	7121-NM-10-2024-0D82D458-1 to 3
NM RPS Active	9aa7ddf2-4ffc	W7324	EPENMAGG1S NM080S	EPENMAGG1S NM080S	Solar	10/1/2024	10/1/2024	10/31/2024	NM	N/A	3	7324-NM-10-2024-489F896C-1 to 3
NM RPS Active	9aa7ddf2-4ffc	W7325	EPENMAGG1S NM081S	EPENMAGG1S NM081S	Solar	10/1/2024	10/1/2024	10/31/2024	NM	N/A	3	7325-NM-10-2024-0D93AE93-1 to 3
NM RPS Active	9aa7ddf2-4ffc	W7332	EPENMAGG1S NM082S	EPENMAGG1S NM082S	Solar	10/1/2024	10/1/2024	10/31/2024	NM	N/A	3	7332-NM-10-2024-93BDE94E-1 to 3
NM RPS Active	9aa7ddf2-4ffc	W7333	EPENMAGG1S NM083S	EPENMAGG1S NM083S	Solar	10/1/2024	10/1/2024	10/31/2024	NM	N/A	4	7333-NM-10-2024-F464DD32-1 to 4
NM RPS Active	9aa7ddf2-4ffc	W7424	EPENMAGG1S NM084S	EPENMAGG1S NM084S	Solar	10/1/2024	10/1/2024	10/31/2024	NM	N/A	3	7424-NM-10-2024-F15D275E-1 to 3
NM RPS Active	9aa7ddf2-4ffc	W7425	EPENMAGG1S NM085S	EPENMAGG1S NM085S	Solar	10/1/2024	10/1/2024	10/31/2024	NM	N/A	2	7425-NM-10-2024-FCE9650C-1 to 2
NM RPS Active	9aa7ddf2-4ffc	W7547	EPENMAGG1S NM086S	EPENMAGG1S NM086S	Solar	10/1/2024	10/1/2024	10/31/2024	NM	N/A	1	7547-NM-10-2024-5079B66F-1 to 1
NM RPS Active	9aa7ddf2-4ffc	W7554	EPENMAGG1S NM087S	EPENMAGG1S NM087S	Solar	10/1/2024	10/1/2024	10/31/2024	NM	N/A	4	7554-NM-10-2024-CC24FE8B-1 to 4
NM RPS Active	9aa7ddf2-4ffc	W7555	EPENMAGG1S NM088S	EPENMAGG1S NM088S	Solar	10/1/2024	10/1/2024	10/31/2024	NM	N/A	1	7555-NM-10-2024-26FDB183-1 to 1
NM RPS Active	9aa7ddf2-4ffc	W7556	EPENMAGG1S NM089S	EPENMAGG1S NM089S	Solar	10/1/2024	10/1/2024	10/31/2024	NM	N/A	2	7556-NM-10-2024-5DDD570E-1 to 2
NM RPS Active	9aa7ddf2-4ffc	W7557	EPENMAGG1S NM090S	EPENMAGG1S NM090S	Solar	10/1/2024	10/1/2024	10/31/2024	NM	N/A	1	7557-NM-10-2024-6F8396E0-1 to 1
NM RPS Active	9aa7ddf2-4ffc	W7558	EPENMAGG1S NM091S	EPENMAGG1S NM091S	Solar	10/1/2024	10/1/2024	10/31/2024	NM	N/A	3	7558-NM-10-2024-6C3976E4-1 to 3
NM RPS Active	9aa7ddf2-4ffc	W7559	EPENMAGG1S NM092S	EPENMAGG1S NM092S	Solar	10/1/2024	10/1/2024	10/31/2024	NM	N/A	4	7559-NM-10-2024-0568CF03-1 to 4
NM RPS Active	9aa7ddf2-4ffc	W7561	EPENMAGG1S NM093S	EPENMAGG1S NM093S	Solar	10/1/2024	10/1/2024	10/31/2024	NM	N/A	2	7561-NM-10-2024-2701C0D9-1 to 2
NM RPS Active	9aa7ddf2-4ffc	W7671	EPENMAGG1S NM094S	EPENMAGG1S NM094S	Solar	10/1/2024	10/1/2024	10/31/2024	NM	N/A	2	7671-NM-10-2024-6DD58BE2-1 to 2
NM RPS Active	9aa7ddf2-4ffc	W7672	EPENMAGG1S NM095S	EPENMAGG1S NM095S	Solar	10/1/2024	10/1/2024	10/31/2024	NM	N/A	1	7672-NM-10-2024-B07A49A4-1 to 1
NM RPS Active	9aa7ddf2-4ffc	W7673	EPENMAGG1S NM096S	EPENMAGG1S NM096S	Solar	10/1/2024	10/1/2024	10/31/2024	NM	N/A	2	7673-NM-10-2024-9D6F68B1-1 to 2
NM RPS Active	9aa7ddf2-4ffc	W7674	EPENMAGG1S NM097S	EPENMAGG1S NM097S	Solar	10/1/2024	10/1/2024	10/31/2024	NM	N/A	2	7674-NM-10-2024-598D2CBD-1 to 2
NM RPS Active	9aa7ddf2-4ffc	W7699	EPENMAGG1S NM098S	EPENMAGG1S NM098S	Solar	10/1/2024	10/1/2024	10/31/2024	NM	N/A	2	7699-NM-10-2024-792CEA1A-1 to 2
NM RPS Active	9aa7ddf2-4ffc	W7700	EPENMAGG1S NM099S	EPENMAGG1S NM099S	Solar	10/1/2024	10/1/2024	10/31/2024	NM	N/A	2	7700-NM-10-2024-43745DD2-1 to 2
NM RPS Active	9aa7ddf2-4ffc	W8124	EPENMAGG1S NM101S	EPENMAGG1S NM101S	Solar	10/1/2024	10/1/2024	10/31/2024	NM	N/A	3	8124-NM-10-2024-24A3BB32-1 to 3
NM RPS Active	9aa7ddf2-4ffc	W8198	EPENMAGG1S NM103S	EPENMAGG1S NM103S	Solar	10/1/2024	10/1/2024	10/31/2024	NM	N/A	1	8198-NM-10-2024-B6660651-1 to 1
NM RPS Active	9aa7ddf2-4ffc	W8794	EPENMAGG1S NM104S	EPENMAGG1S NM104S	Solar	10/1/2024	10/1/2024	10/31/2024	NM	N/A	4	8794-NM-10-2024-C3000582-1 to 4
NM RPS Active	9aa7ddf2-4ffc	W8835	EPENMAGG1S NM105S	EPENMAGG1S NM105S	Solar	10/1/2024	10/1/2024	10/31/2024	NM	N/A	3	8835-NM-10-2024-5D0E0AE3-1 to 3
NM RPS Active	9aa7ddf2-4ffc	W8836	EPENMAGG1S NM106S	EPENMAGG1S NM106S	Solar	10/1/2024	10/1/2024	10/31/2024	NM	N/A	2	8836-NM-10-2024-0162B465-1 to 2
NM RPS Active	9aa7ddf2-4ffc	W9324	EPENMAGG1S NM107S	EPENMAGG1S NM107S	Solar	10/1/2024	10/1/2024	10/31/2024	NM	N/A	3	9324-NM-10-2024-91EF341A-1 to 3
NM RPS Active	9aa7ddf2-4ffc	W9325	EPENMAGG1S NM108S	EPENMAGG1S NM108S	Solar	10/1/2024	10/1/2024	10/31/2024	NM	N/A	2	9325-NM-10-2024-DB1A9CD7-1 to 2
NM RPS Active	9aa7ddf2-4ffc	W9344	EPENMAGG1S NM109S	EPENMAGG1S NM109S	Solar	10/1/2024	10/1/2024	10/31/2024	NM	N/A	1	9344-NM-10-2024-38051C6D-1 to 1
NM RPS Active	9aa7ddf2-4ffc	W9345	EPENMAGG1S NM110S	EPENMAGG1S NM110S	Solar	10/1/2024	10/1/2024	10/31/2024	NM	N/A	2	9345-NM-10-2024-4E895816-1 to 2
NM RPS Active	9aa7ddf2-4ffc	W9602	EPENMAGG1S NM111S	EPENMAGG1S NM111S	Solar	10/1/2024	10/1/2024	10/31/2024	NM	N/A	2	9602-NM-10-2024-2430858C-1 to 2
NM RPS Active	9aa7ddf2-4ffc	W9603	EPENMAGG1S NM112S	EPENMAGG1S NM112S	Solar	10/1/2024	10/1/2024	10/31/2024	NM	N/A	2	9603-NM-10-2024-E59C6939-1 to 2
NM RPS Active	9aa7ddf2-4ffc	W10025	EPENMAGG1S NM113S	EPENMAGG1S NM113S	Solar	10/1/2024	10/1/2024	10/31/2024	NM	N/A	4	10025-NM-10-2024-4D95B73D-1 to 4
NM RPS Active	9aa7ddf2-4ffc	W10026	EPENMAGG1S NM114S	EPENMAGG1S NM114S	Solar	10/1/2024	10/1/2024	10/31/2024	NM	N/A	2	10026-NM-10-2024-ACBDB646-1 to 2
NM RPS Active	9aa7ddf2-4ffc	W10027	EPENMAGG1S NM115S	EPENMAGG1S NM115S	Solar	10/1/2024	10/1/2024	10/31/2024	NM	N/A	2	10027-NM-10-2024-7A3BBD7A-1 to 2

Account	Account ID	WREGIS GU ID	Unit Name	Facility Name	Fuel Type	Vintage	Generation Start Date	Generation End Date	Generator Location	Eligility	Quantity (RECs)	Serial Numbers
NM RPS Active	9aa7ddf2-4ffc	W10105	EPENMAGG1S NM116S	EPENMAGG1S NM116S	Solar	10/1/2024	10/1/2024	10/31/2024	NM	N/A	2	10105-NM-10-2024-89BB12D8-1 to 2
NM RPS Active	9aa7ddf2-4ffc	W10106	EPENMAGG1S NM117S	EPENMAGG1S NM117S	Solar	10/1/2024	10/1/2024	10/31/2024	NM	N/A	1	10106-NM-10-2024-120FC276-1 to 1
NM RPS Active	9aa7ddf2-4ffc	W10107	EPENMAGG1S NM118S	EPENMAGG1S NM118S	Solar	10/1/2024	10/1/2024	10/31/2024	NM	N/A	3	10107-NM-10-2024-FECD7248-1 to 3
NM RPS Active	9aa7ddf2-4ffc	W10167	EPENMAGG1S NM119S	EPENMAGG1S NM119S	Solar	10/1/2024	10/1/2024	10/31/2024	NM	N/A	3	10167-NM-10-2024-DB2F4DE7-1 to 3
NM RPS Active	9aa7ddf2-4ffc	W10460	EPENMAGG1S NM121S	EPENMAGG1S NM121S	Solar	10/1/2024	10/1/2024	10/31/2024	NM	N/A	4	10460-NM-10-2024-A141EA84-1 to 4
NM RPS Active	9aa7ddf2-4ffc	W10461	EPENMAGG1S NM122S	EPENMAGG1S NM122S	Solar	10/1/2024	10/1/2024	10/31/2024	NM	N/A	4	10461-NM-10-2024-F0A5642B-1 to 4
NM RPS Active	9aa7ddf2-4ffc	W10695	EPENMAGG1S NM124S	EPENMAGG1S NM124S	Solar	10/1/2024	10/1/2024	10/31/2024	NM	N/A	2	10695-NM-10-2024-154A3C49-1 to 2
NM RPS Active	9aa7ddf2-4ffc	W10800	EPENMAGG1S NM125S	EPENMAGG1S NM125S	Solar	10/1/2024	10/1/2024	10/31/2024	NM	N/A	1	10800-NM-10-2024-8B48223F-1 to 1
NM RPS Active	9aa7ddf2-4ffc	W10820	EPENMAGG1S NM126S	EPENMAGG1S NM126S	Solar	10/1/2024	10/1/2024	10/31/2024	NM	N/A	2	10820-NM-10-2024-3D643DBC-1 to 2
NM RPS Active	9aa7ddf2-4ffc	W10821	EPENMAGG1S NM127S	EPENMAGG1S NM127S	Solar	10/1/2024	10/1/2024	10/31/2024	NM	N/A	4	10821-NM-10-2024-63E99445-1 to 4
NM RPS Active	9aa7ddf2-4ffc	W10867	EPENMAGG1S NM128S	EPENMAGG1S NM128S	Solar	10/1/2024	10/1/2024	10/31/2024	NM	N/A	3	10867-NM-10-2024-48DEE2F1-1 to 3
NM RPS Active	9aa7ddf2-4ffc	W10868	EPENMAGG1S NM129S	EPENMAGG1S NM129S	Solar	10/1/2024	10/1/2024	10/31/2024	NM	N/A	1	10868-NM-10-2024-AA443D4B-1 to 1
NM RPS Active	9aa7ddf2-4ffc	W10925	EPENMAGG1S NM131S	EPENMAGG1S NM131S	Solar	10/1/2024	10/1/2024	10/31/2024	NM	N/A	1	10925-NM-10-2024-8D238E69-1 to 1
NM RPS Active	9aa7ddf2-4ffc	W10926	EPENMAGG1S NM132S	EPENMAGG1S NM132S	Solar	10/1/2024	10/1/2024	10/31/2024	NM	N/A	1	10926-NM-10-2024-CAF9FBAE-1 to 1
NM RPS Active	9aa7ddf2-4ffc	W11361	EPENMAGG1S NM133S	EPENMAGG1S NM133S	Solar	10/1/2024	10/1/2024	10/31/2024	NM	N/A	1	11361-NM-10-2024-F1856530-1 to 1
NM RPS Active	9aa7ddf2-4ffc	W11363	EPENMAGG1S NM135S	EPENMAGG1S NM135S	Solar	10/1/2024	10/1/2024	10/31/2024	NM	N/A	2	11363-NM-10-2024-E647DE82-1 to 2
NM RPS Active	9aa7ddf2-4ffc	W11374	EPENMAGG1S NM136S	EPENMAGG1S NM136S	Solar	10/1/2024	10/1/2024	10/31/2024	NM	N/A	2	11374-NM-10-2024-7F6D7BDB-1 to 2
NM RPS Active	9aa7ddf2-4ffc	W11375	EPENMAGG1S NM137S	EPENMAGG1S NM137S	Solar	10/1/2024	10/1/2024	10/31/2024	NM	N/A	3	11375-NM-10-2024-DCE07FB4-1 to 3
NM RPS Active	9aa7ddf2-4ffc	W11377	EPENMAGG1S NM138S	EPENMAGG1S NM138S	Solar	10/1/2024	10/1/2024	10/31/2024	NM	N/A	3	11377-NM-10-2024-B39C2EE9-1 to 3
NM RPS Active	9aa7ddf2-4ffc	W11378	EPENMAGG1S NM139S	EPENMAGG1S NM139S	Solar	10/1/2024	10/1/2024	10/31/2024	NM	N/A	2	11378-NM-10-2024-232A0A61-1 to 2
NM RPS Active	9aa7ddf2-4ffc	W11379	EPENMAGG1S NM140S	EPENMAGG1S NM140S	Solar	10/1/2024	10/1/2024	10/31/2024	NM	N/A	5	11379-NM-10-2024-73DCFF9C-1 to 5
NM RPS Active	9aa7ddf2-4ffc	W11381	EPENMAGG1S NM141S	EPENMAGG1S NM141S	Solar	10/1/2024	10/1/2024	10/31/2024	NM	N/A	3	11381-NM-10-2024-48D010C3-1 to 3
NM RPS Active	9aa7ddf2-4ffc	W11382	EPENMAGG1S NM142S	EPENMAGG1S NM142S	Solar	10/1/2024	10/1/2024	10/31/2024	NM	N/A	1	11382-NM-10-2024-93529EB5-1 to 1
NM RPS Active	9aa7ddf2-4ffc	W11383	EPENMAGG1S NM143S	EPENMAGG1S NM143S	Solar	10/1/2024	10/1/2024	10/31/2024	NM	N/A	5	11383-NM-10-2024-24D65294-1 to 5
NM RPS Active	9aa7ddf2-4ffc	W11384	EPENMAGG1S NM144S	EPENMAGG1S NM144S	Solar	10/1/2024	10/1/2024	10/31/2024	NM	N/A	2	11384-NM-10-2024-ACB90CB5-1 to 2
NM RPS Active	9aa7ddf2-4ffc	W11968	EPENMAGG1S NM145S	EPENMAGG1S NM145S	Solar	10/1/2024	10/1/2024	10/31/2024	NM	N/A	5	11968-NM-10-2024-D0C662B9-1 to 5
NM RPS Active	9aa7ddf2-4ffc	W11969	EPENMAGG1S NM146S	EPENMAGG1S NM146S	Solar	10/1/2024	10/1/2024	10/31/2024	NM	N/A	2	11969-NM-10-2024-A713DD46-1 to 2
NM RPS Active	9aa7ddf2-4ffc	W11970	EPENMAGG1S NM147S	EPENMAGG1S NM147S	Solar	10/1/2024	10/1/2024	10/31/2024	NM	N/A	6	11970-NM-10-2024-EC4D45B8-1 to 6
NM RPS Active	9aa7ddf2-4ffc	W11972	EPENMAGG1S NM149S	EPENMAGG1S NM149S	Solar	10/1/2024	10/1/2024	10/31/2024	NM	N/A	4	11972-NM-10-2024-51DEED3B-1 to 4
NM RPS Active	9aa7ddf2-4ffc	W11973	EPENMAGG1S NM150S	EPENMAGG1S NM150S	Solar	10/1/2024	10/1/2024	10/31/2024	NM	N/A	4	11973-NM-10-2024-8BD30E36-1 to 4
NM RPS Active	9aa7ddf2-4ffc	W11974	EPENMAGG1S NM151S	EPENMAGG1S NM151S	Solar	10/1/2024	10/1/2024	10/31/2024	NM	N/A	4	11974-NM-10-2024-AE7BA0BB-1 to 4
NM RPS Active	9aa7ddf2-4ffc	W11975	EPENMAGG1S NM152S	EPENMAGG1S NM152S	Solar	10/1/2024	10/1/2024	10/31/2024	NM	N/A	3	11975-NM-10-2024-4D8439EC-1 to 3
NM RPS Active	9aa7ddf2-4ffc	W11976	EPENMAGG1S NM153S	EPENMAGG1S NM153S	Solar	10/1/2024	10/1/2024	10/31/2024	NM	N/A	4	11976-NM-10-2024-A1988199-1 to 4
NM RPS Active	9aa7ddf2-4ffc	W11977	EPENMAGG1S NM154S	EPENMAGG1S NM154S	Solar	10/1/2024	10/1/2024	10/31/2024	NM	N/A	4	11977-NM-10-2024-C35C206E-1 to 4
NM RPS Active	9aa7ddf2-4ffc	W11980	EPENMAGG1S NM156S	EPENMAGG1S NM156S	Solar	10/1/2024	10/1/2024	10/31/2024	NM	N/A	6	11980-NM-10-2024-C8D5C186-1 to 6
NM RPS Active	9aa7ddf2-4ffc	W11981	EPENMAGG1S NM157S	EPENMAGG1S NM157S	Solar	10/1/2024	10/1/2024	10/31/2024	NM	N/A	5	11981-NM-10-2024-5982D5FD-1 to 5
NM RPS Active	9aa7ddf2-4ffc	W11982	EPENMAGG1S NM158S	EPENMAGG1S NM158S	Solar	10/1/2024	10/1/2024	10/31/2024	NM	N/A	2	11982-NM-10-2024-5FEE5A95-1 to 2
NM RPS Active	9aa7ddf2-4ffc	W11984	EPENMAGG1S NM159S	EPENMAGG1S NM159S	Solar	10/1/2024	10/1/2024	10/31/2024	NM	N/A	2	11984-NM-10-2024-BD2F5BD4-1 to 2
NM RPS Active	9aa7ddf2-4ffc	W12098	EPENMAGG1S NM160S	EPENMAGG1S NM160S	Solar	10/1/2024	10/1/2024	10/31/2024	NM	N/A	2	12098-NM-10-2024-2AC27761-1 to 2
NM RPS Active	9aa7ddf2-4ffc	W12099	EPENMAGG1S NM161S	EPENMAGG1S NM161S	Solar	10/1/2024	10/1/2024	10/31/2024	NM	N/A	3	12099-NM-10-2024-27FD1F8F-1 to 3
NM RPS Active	9aa7ddf2-4ffc	W12100	EPENMAGG1S NM162S	EPENMAGG1S NM162S	Solar	10/1/2024	10/1/2024	10/31/2024	NM	N/A	4	12100-NM-10-2024-7829C4CC-1 to 4
NM RPS Active	9aa7ddf2-4ffc	W12101	EPENMAGG1S NM163S	EPENMAGG1S NM163S	Solar	10/1/2024	10/1/2024	10/31/2024	NM	N/A	4	12101-NM-10-2024-1F9896B6-1 to 4
NM RPS Active	9aa7ddf2-4ffc	W12188	EPENMAGG1S NM164S	EPENMAGG1S NM164S	Solar	10/1/2024	10/1/2024	10/31/2024	NM	N/A	3	12188-NM-10-2024-6BF81E7A-1 to 3
NM RPS Active	9aa7ddf2-4ffc	W12260	EPENMAGG1S NM168S	EPENMAGG1S NM168S	Solar	10/1/2024	10/1/2024	10/31/2024	NM	N/A	4	12260-NM-10-2024-5B463B96-1 to 4
NM RPS Active	9aa7ddf2-4ffc	W12643	EPENMAGG1S NM170S	EPENMAGG1S NM170S	Solar	10/1/2024	10/1/2024	10/31/2024	NM	N/A	4	12643-NM-10-2024-5633DC06-1 to 4
NM RPS Active	9aa7ddf2-4ffc	W12646	EPENMAGG1S NM173S	EPENMAGG1S NM173S	Solar	10/1/2024	10/1/2024	10/31/2024	NM	N/A	5	12646-NM-10-2024-7C9F483D-1 to 5
NM RPS Active	9aa7ddf2-4ffc	W12651	EPENMAGG1S NM176S	EPENMAGG1S NM176S	Solar	10/1/2024	10/1/2024	10/31/2024	NM	N/A	4	12651-NM-10-2024-216B9383-1 to 4
NM RPS Active	9aa7ddf2-4ffc	W12702	EPENMAGG1S NM177S	EPENMAGG1S NM177S	Solar	10/1/2024	10/1/2024	10/31/2024	NM	N/A	8	12702-NM-10-2024-4F7E0B60-1 to 8
NM RPS Active	9aa7ddf2-4ffc	W12703	EPENMAGG1S NM178S	EPENMAGG1S NM178S	Solar	10/1/2024	10/1/2024	10/31/2024	NM	N/A	5	12703-NM-10-2024-78110164-1 to 5
NM RPS Active	9aa7ddf2-4ffc	W12704	EPENMAGG1S NM179S	EPENMAGG1S NM179S	Solar	10/1/2024	10/1/2024	10/31/2024	NM	N/A	4	12704-NM-10-2024-2C1A8C2E-1 to 4
NM RPS Active	9aa7ddf2-4ffc	W12744	EPENMAGG1S NM180S	EPENMAGG1S NM180S	Solar	10/1/2024	10/1/2024	10/31/2024	NM	N/A	3	12744-NM-10-2024-52D358CD-1 to 3
NM RPS Active	9aa7ddf2-4ffc	W12745	EPENMAGG1S NM181S	EPENMAGG1S NM181S	Solar	10/1/2024	10/1/2024	10/31/2024	NM	N/A	3	12745-NM-10-2024-28A8270B-1 to 3
NM RPS Active	9aa7ddf2-4ffc	W13207	EPENMAGG1S NM182S	EPENMAGG1S NM182S	Solar	10/1/2024	10/1/2024	10/31/2024	NM	N/A	5	13207-NM-10-2024-A115BE6F-1 to 5
NM RPS Active	9aa7ddf2-4ffc	W13208	EPENMAGG1S NM183S	EPENMAGG1S NM183S	Solar	10/1/2024	10/1/2024	10/31/2024	NM	N/A	4	13208-NM-10-2024-559AD648-1 to 4
NM RPS Active	9aa7ddf2-4ffc	W13211	EPENMAGG1S NM185S	EPENMAGG1S NM185S	Solar	10/1/2024	10/1/2024	10/31/2024	NM	N/A	7	13211-NM-10-2024-810EA373-1 to 7
NM RPS Active	9aa7ddf2-4ffc	W13615	EPENMAGG1S NM186S	EPENMAGG1S NM186S	Solar	10/1/2024	10/1/2024	10/31/2024	NM	N/A	4	13615-NM-10-2024-5ED93D18-1 to 4
NM RPS Active	9aa7ddf2-4ffc	W13616	EPENMAGG1S NM187S	EPENMAGG1S NM187S	Solar	10/1/2024	10/1/2024	10/31/2024	NM	N/A	3	13616-NM-10-2024-E3C08C18-1 to 3
NM RPS Active	9aa7ddf2-4ffc	W13701	EPENMAGG1S NM188S	EPENMAGG1S NM188S	Solar	10/1/2024	10/1/2024	10/31/2024	NM	N/A	6	13701-NM-10-2024-423DB37F-1 to 6

Account	Account ID	WREGIS GU ID	Unit Name	Facility Name	Fuel Type	Vintage	Generation Start Date	Generation End Date	Generator Location	Eligility	Quantity (RECs)	Serial Numbers
NM RPS Active	9aa7ddf2-4ffc	W13702	EPENMAGG1S NM189S	EPENMAGG1S NM189S	Solar	10/1/2024	10/1/2024	10/31/2024	NM	N/A	4	13702-NM-10-2024-D17FC81E-1 to 4
NM RPS Active	9aa7ddf2-4ffc	W13799	EPENMAGG1S NM190S	EPENMAGG1S NM190S	Solar	10/1/2024	10/1/2024	10/31/2024	NM	N/A	5	13799-NM-10-2024-B30327C1-1 to 5
NM RPS Active	9aa7ddf2-4ffc	W13801	EPENMAGG1S NM191S	EPENMAGG1S NM191S	Solar	10/1/2024	10/1/2024	10/31/2024	NM	N/A	3	13801-NM-10-2024-B744D9DB-1 to 3
NM RPS Active	9aa7ddf2-4ffc	W13802	EPENMAGG1S NM192S	EPENMAGG1S NM192S	Solar	10/1/2024	10/1/2024	10/31/2024	NM	N/A	5	13802-NM-10-2024-25BA6FB8-1 to 5
NM RPS Active	9aa7ddf2-4ffc	W13803	EPENMAGG1S NM193S	EPENMAGG1S NM193S	Solar	10/1/2024	10/1/2024	10/31/2024	NM	N/A	7	13803-NM-10-2024-FE27B81D-1 to 7
NM RPS Active	9aa7ddf2-4ffc	W13804	EPENMAGG1S NM194S	EPENMAGG1S NM194S	Solar	10/1/2024	10/1/2024	10/31/2024	NM	N/A	3	13804-NM-10-2024-B25B0394-1 to 3
NM RPS Active	9aa7ddf2-4ffc	W13897	EPENMAGG1S NM195S	EPENMAGG1S NM195S	Solar	10/1/2024	10/1/2024	10/31/2024	NM	N/A	3	13897-NM-10-2024-E6630E15-1 to 3
NM RPS Active	9aa7ddf2-4ffc	W13898	EPENMAGG1S NM196S	EPENMAGG1S NM196S	Solar	10/1/2024	10/1/2024	10/31/2024	NM	N/A	6	13898-NM-10-2024-B74641CC-1 to 6
NM RPS Active	9aa7ddf2-4ffc	W13972	EPENMAGG1S NM197S	EPENMAGG1S NM197S	Solar	10/1/2024	10/1/2024	10/31/2024	NM	N/A	2	13972-NM-10-2024-BB827BA4-1 to 2
NM RPS Active	9aa7ddf2-4ffc	W13973	EPENMAGG1S NM198S	EPENMAGG1S NM198S	Solar	10/1/2024	10/1/2024	10/31/2024	NM	N/A	4	13973-NM-10-2024-8FBC90BD-1 to 4
NM RPS Active	9aa7ddf2-4ffc	W13975	EPENMAGG1S NM199S	EPENMAGG1S NM199S	Solar	10/1/2024	10/1/2024	10/31/2024	NM	N/A	4	13975-NM-10-2024-B64A7A03-1 to 4
NM RPS Active	9aa7ddf2-4ffc	W14044	EPENMAGG1S NM200S	EPENMAGG1S NM200S	Solar	10/1/2024	10/1/2024	10/31/2024	NM	N/A	3	14044-NM-10-2024-0AB38409-1 to 3
NM RPS Active	9aa7ddf2-4ffc	W14045	EPENMAGG1S NM201S	EPENMAGG1S NM201S	Solar	10/1/2024	10/1/2024	10/31/2024	NM	SMUD	4	14045-NM-10-2024-931F7760-1 to 4
NM RPS Active	9aa7ddf2-4ffc	W14046	EPENMAGG1S NM202S	EPENMAGG1S NM202S	Solar	10/1/2024	10/1/2024	10/31/2024	NM	N/A	3	14046-NM-10-2024-4247ED02-1 to 3
NM RPS Active	9aa7ddf2-4ffc	W14049	EPENMAGG1S NM204S	EPENMAGG1S NM204S	Solar	10/1/2024	10/1/2024	10/31/2024	NM	SMUD	4	14049-NM-10-2024-7ABE3B86-1 to 4
NM RPS Active	9aa7ddf2-4ffc	W14225	N/A	EPENMAGG1S NM205S	Solar	10/1/2024	10/1/2024	10/31/2024	NM	N/A	4	14225-NM-10-2024-8EC03AA4-1 to 4
NM RPS Active	9aa7ddf2-4ffc	W14230	N/A	EPENMAGG1S NM206S	Solar	10/1/2024	10/1/2024	10/31/2024	NM	N/A	5	14230-NM-10-2024-7A7CF9CC-1 to 5
NM RPS Active	9aa7ddf2-4ffc	W14334	N/A	EPENMAGG1S NM207S	Solar	10/1/2024	10/1/2024	10/31/2024	NM	N/A	4	14334-NM-10-2024-0D51D3D8-1 to 4
NM RPS Active	9aa7ddf2-4ffc	W15470	N/A	EPENMAGG1S NM208S	Solar	10/1/2024	10/1/2024	10/31/2024	NM	N/A	9	15470-NM-10-2024-7C36AB0E-1 to 9
NM RPS Active	9aa7ddf2-4ffc	W15471	N/A	EPENMAGG1S NM209S	Solar	10/1/2024	10/1/2024	10/31/2024	NM	N/A	4	15471-NM-10-2024-050EF482-1 to 4
NM RPS Active	9aa7ddf2-4ffc	W15472	N/A	EPENMAGG1S NM210S	Solar	10/1/2024	10/1/2024	10/31/2024	NM	N/A	2	15472-NM-10-2024-EF532164-1 to 2
NM RPS Active	9aa7ddf2-4ffc	W15473	N/A	EPENMAGG1S NM211S	Solar	10/1/2024	10/1/2024	10/31/2024	NM	N/A	2	15473-NM-10-2024-849FC872-1 to 2
NM RPS Active	9aa7ddf2-4ffc	W15474	N/A	EPENMAGG1S NM212S	Solar	10/1/2024	10/1/2024	10/31/2024	NM	N/A	2	15474-NM-10-2024-B0E76933-1 to 2
NM RPS Active	9aa7ddf2-4ffc	W15475	N/A	EPENMAGG1S NM213S	Solar	10/1/2024	10/1/2024	10/31/2024	NM	N/A	5	15475-NM-10-2024-B395D567-1 to 5
NM RPS Active	9aa7ddf2-4ffc	W15517	N/A	EPENMAGG1S NM214S	Solar	10/1/2024	10/1/2024	10/31/2024	NM	N/A	4	15517-NM-10-2024-83EF5711-1 to 4
NM RPS Active	9aa7ddf2-4ffc	W15518	N/A	EPENMAGG1S NM215S	Solar	10/1/2024	10/1/2024	10/31/2024	NM	N/A	6	15518-NM-10-2024-9B7FC76D-1 to 6
NM RPS Active	9aa7ddf2-4ffc	W15519	N/A	EPENMAGG1S NM216S	Solar	10/1/2024	10/1/2024	10/31/2024	NM	N/A	4	15519-NM-10-2024-02A1E562-1 to 4
NM RPS Active	9aa7ddf2-4ffc	W15520	N/A	EPENMAGG1S NM217S	Solar	10/1/2024	10/1/2024	10/31/2024	NM	N/A	2	15520-NM-10-2024-17E5DBCE-1 to 2
NM RPS Active	9aa7ddf2-4ffc	W15521	N/A	EPENMAGG1S NM218S	Solar	10/1/2024	10/1/2024	10/31/2024	NM	N/A	1	15521-NM-10-2024-7235706D-1 to 1
NM RPS Active	9aa7ddf2-4ffc	W15533	N/A	EPENMAGG1S NM219S	Solar	10/1/2024	10/1/2024	10/31/2024	NM	N/A	3	15533-NM-10-2024-F55DE897-1 to 3
NM RPS Active	9aa7ddf2-4ffc	W15702	N/A	EPENMAGG1S NM220S	Solar	10/1/2024	10/1/2024	10/31/2024	NM	N/A	4	15702-NM-10-2024-87DE4EA7-1 to 4
NM RPS Active	9aa7ddf2-4ffc	W15703	N/A	EPENMAGG1S NM221S	Solar	10/1/2024	10/1/2024	10/31/2024	NM	N/A	8	15703-NM-10-2024-16DDB97D-1 to 8
NM RPS Active	9aa7ddf2-4ffc	W15704	N/A	EPENMAGG1S NM222S	Solar	10/1/2024	10/1/2024	10/31/2024	NM	N/A	5	15704-NM-10-2024-45EDFD73-1 to 5
NM RPS Active	9aa7ddf2-4ffc	W15705	N/A	EPENMAGG1S NM223S	Solar	10/1/2024	10/1/2024	10/31/2024	NM	N/A	6	15705-NM-10-2024-2145BF11-1 to 6
NM RPS Active	9aa7ddf2-4ffc	W16065	N/A	EPENMAGG1S NM224S	Solar	10/1/2024	10/1/2024	10/31/2024	NM	N/A	2	16065-NM-10-2024-EB0BFA97-1 to 2
NM RPS Active	9aa7ddf2-4ffc	W16066	N/A	EPENMAGG1S NM225S	Solar	10/1/2024	10/1/2024	10/31/2024	NM	N/A	5	16066-NM-10-2024-8220C246-1 to 5
NM RPS Active	9aa7ddf2-4ffc	W16067	N/A	EPENMAGG1S NM226S	Solar	10/1/2024	10/1/2024	10/31/2024	NM	N/A	2	16067-NM-10-2024-9169BE3C-1 to 2
NM RPS Active	9aa7ddf2-4ffc	W16490	N/A	EPENMAGG1S NM227S	Solar	10/1/2024	10/1/2024	10/31/2024	NM	N/A	4	16490-NM-10-2024-A4EAFF9D-1 to 4
NM RPS Active	9aa7ddf2-4ffc	W16492	N/A	EPENMAGG1S NM229S	Solar	10/1/2024	10/1/2024	10/31/2024	NM	N/A	3	16492-NM-10-2024-539DB6AE-1 to 3
NM RPS Active	9aa7ddf2-4ffc	W16493	N/A	EPENMAGG1S NM230S	Solar	10/1/2024	10/1/2024	10/31/2024	NM	N/A	3	16493-NM-10-2024-DB098172-1 to 3
NM RPS Active	9aa7ddf2-4ffc	W16494	N/A	EPENMAGG1S NM231S	Solar	10/1/2024	10/1/2024	10/31/2024	NM	N/A	8	16494-NM-10-2024-61B5E7FA-1 to 8
NM RPS Active	9aa7ddf2-4ffc	W17425	N/A	EPENMAGG1S NM232S	Solar	10/1/2024	10/1/2024	10/31/2024	NM	N/A	3	17425-NM-10-2024-2835A495-1 to 3
NM RPS Active	9aa7ddf2-4ffc	W17426	N/A	EPENMAGG1S NM233S	Solar	10/1/2024	10/1/2024	10/31/2024	NM	N/A	6	17426-NM-10-2024-9D62C06A-1 to 6
NM RPS Active	9aa7ddf2-4ffc	W17427	N/A	EPENMAGG1S NM235S	Solar	10/1/2024	10/1/2024	10/31/2024	NM	N/A	4	17427-NM-10-2024-EE987ED1-1 to 4
NM RPS Active	9aa7ddf2-4ffc	W17428	N/A	EPENMAGG1S NM236S	Solar	10/1/2024	10/1/2024	10/31/2024	NM	N/A	5	17428-NM-10-2024-31F4495B-1 to 5
NM RPS Active	9aa7ddf2-4ffc	W17429	N/A	EPENMAGG1S NM237S	Solar	10/1/2024	10/1/2024	10/31/2024	NM	N/A	20	17429-NM-10-2024-909D4432-1 to 20
NM RPS Active	9aa7ddf2-4ffc	W17430	N/A	EPENMAGG1S NM238S	Solar	10/1/2024	10/1/2024	10/31/2024	NM	N/A	5	17430-NM-10-2024-9F6B9C54-1 to 5
NM RPS Active	9aa7ddf2-4ffc	W17431	N/A	EPENMAGG1S NM239S	Solar	10/1/2024	10/1/2024	10/31/2024	NM	N/A	6	17431-NM-10-2024-C22E410D-1 to 6
NM RPS Active	9aa7ddf2-4ffc	W17432	N/A	EPENMAGG1S NM240S	Solar	10/1/2024	10/1/2024	10/31/2024	NM	N/A	7	17432-NM-10-2024-B61E7E6D-1 to 7
NM RPS Active	9aa7ddf2-4ffc	W17433	N/A	EPENMAGG1S NM241S	Solar	10/1/2024	10/1/2024	10/31/2024	NM	N/A	5	17433-NM-10-2024-5E69B03F-1 to 5
NM RPS Active	9aa7ddf2-4ffc	W17434	N/A	EPENMAGG1S NM242S	Solar	10/1/2024	10/1/2024	10/31/2024	NM	N/A	2	17434-NM-10-2024-D4187A4C-1 to 2
NM RPS Active	9aa7ddf2-4ffc	W17435	N/A	EPENMAGG1S NM243S	Solar	10/1/2024	10/1/2024	10/31/2024	NM	N/A	3	17435-NM-10-2024-AF48A116-1 to 3
NM RPS Active	9aa7ddf2-4ffc	W17436	N/A	EPENMAGG1S NM244S	Solar	10/1/2024	10/1/2024	10/31/2024	NM	N/A	5	17436-NM-10-2024-B44056DD-1 to 5
NM RPS Active	9aa7ddf2-4ffc	W17546	N/A	EPENMAGG1S NM245S	Solar	10/1/2024	10/1/2024	10/31/2024	NM	N/A	6	17546-NM-10-2024-3853E32E-1 to 6
NM RPS Active	9aa7ddf2-4ffc	W17824	N/A	EPENMAGG1S NM246S	Solar	10/1/2024	10/1/2024	10/31/2024	NM	N/A	4	17824-NM-10-2024-969ACFCF-1 to 4
NM RPS Active	9aa7ddf2-4ffc	W17825	N/A	EPENMAGG1S NM247S	Solar	10/1/2024	10/1/2024	10/31/2024	NM	N/A	4	17825-NM-10-2024-D6BF2E16-1 to 4
NM RPS Active	9aa7ddf2-4ffc	W18165	N/A	EPENMAGG1S NM248S	Solar	10/1/2024	10/1/2024	10/31/2024	NM	N/A	5	18165-NM-10-2024-5C1040AD-1 to 5
NM RPS Active	9aa7ddf2-4ffc	W18166	N/A	EPENMAGG1S NM249S	Solar	10/1/2024	10/1/2024	10/31/2024	NM	N/A	4	18166-NM-10-2024-DDB7F619-1 to 4

Account	Account ID	WREGIS GU ID	Unit Name	Facility Name	Fuel Type	Vintage	Generation Start Date	Generation End Date	Generator Location	Eligility	Quantity (RECs)	Serial Numbers
NM RPS Active	9aa7ddf2-4ffc	W18167	N/A	EPENMAGG1S NM250S	Solar	10/1/2024	10/1/2024	10/31/2024	NM	N/A	5	18167-NM-10-2024-CB931060-1 to 5
NM RPS Active	9aa7ddf2-4ffc	W18279	N/A	EPENMAGG1S NM251S	Solar	10/1/2024	10/1/2024	10/31/2024	NM	N/A	3	18279-NM-10-2024-7D267530-1 to 3
NM RPS Active	9aa7ddf2-4ffc	W18280	N/A	EPENMAGG1S NM252S	Solar	10/1/2024	10/1/2024	10/31/2024	NM	N/A	4	18280-NM-10-2024-06BF48D4-1 to 4
NM RPS Active	9aa7ddf2-4ffc	W18547	N/A	EPENMAGG1S NM253S	Solar	10/1/2024	10/1/2024	10/31/2024	NM	N/A	3	18547-NM-10-2024-A53A6016-1 to 3
NM RPS Active	9aa7ddf2-4ffc	W18548	N/A	EPENMAGG1S NM254S	Solar	10/1/2024	10/1/2024	10/31/2024	NM	N/A	5	18548-NM-10-2024-67F3E04C-1 to 5
NM RPS Active	9aa7ddf2-4ffc	W18750	N/A	EPENMAGG1S NM255S	Solar	10/1/2024	10/1/2024	10/31/2024	NM	N/A	3	18750-NM-10-2024-DFF4B22F-1 to 3
NM RPS Active	9aa7ddf2-4ffc	W19059	N/A	EPENMAGG1S NM256S	Solar	10/1/2024	10/1/2024	10/31/2024	NM	N/A	3	19059-NM-10-2024-97BA5BEE-1 to 3
NM RPS Active	9aa7ddf2-4ffc	W20226	N/A	EPENMAGG1S NM258S	Solar	10/1/2024	10/1/2024	10/31/2024	NM	N/A	4	20226-NM-10-2024-855E002E-1 to 4
NM RPS Active	9aa7ddf2-4ffc	W20227	N/A	EPENMAGG1S NM259S	Solar	10/1/2024	10/1/2024	10/31/2024	NM	N/A	4	20227-NM-10-2024-936059C9-1 to 4
NM RPS Active	9aa7ddf2-4ffc	W20660	N/A	EPENMAGG1S NM260S	Solar	10/1/2024	10/1/2024	10/31/2024	NM	N/A	4	20660-NM-10-2024-697CBBEE-1 to 4
NM RPS Active	9aa7ddf2-4ffc	W20661	N/A	EPENMAGG1S NM261S	Solar	10/1/2024	10/1/2024	10/31/2024	NM	N/A	2	20661-NM-10-2024-598B0401-1 to 2
NM RPS Active	9aa7ddf2-4ffc	W12647	EPE NM174S - City of Las Cruces - Water Treatment Facilities	EPE NM174S	Solar	11/1/2024	11/1/2024	11/30/2024	NM	N/A	2	12647-NM-11-2024-B9B4028F-1 to 2
NM RPS Active	9aa7ddf2-4ffc	W12650	EPE NM175S - City of Las Cruces - Utilities - Waste Water	EPE NM175S	Solar	11/1/2024	11/1/2024	11/30/2024	NM	N/A	5	12650-NM-11-2024-5E8F502C-1 to 5
NM RPS Active	9aa7ddf2-4ffc	W3622	EPENMAGG1S NM001S	EPENMAGG1S NM001S	Solar	11/1/2024	11/1/2024	11/30/2024	NM	N/A	6	3622-NM-11-2024-03E803A4-1 to 6
NM RPS Active	9aa7ddf2-4ffc	W3624	EPENMAGG1S NM002S	EPENMAGG1S NM002S	Solar	11/1/2024	11/1/2024	11/30/2024	NM	N/A	4	3624-NM-11-2024-D9D4E983-1 to 4
NM RPS Active	9aa7ddf2-4ffc	W3637	EPENMAGG1S NM003S	EPENMAGG1S NM003S	Solar	11/1/2024	11/1/2024	11/30/2024	NM	N/A	6	3637-NM-11-2024-C8DB81EB-1 to 6
NM RPS Active	9aa7ddf2-4ffc	W3638	EPENMAGG1S NM004S	EPENMAGG1S NM004S	Solar	11/1/2024	11/1/2024	11/30/2024	NM	N/A	4	3638-NM-11-2024-5723F66E-1 to 4
NM RPS Active	9aa7ddf2-4ffc	W3639	EPENMAGG1s NM005S	EPENMAGG1s NM005S	Solar	11/1/2024	11/1/2024	11/30/2024	NM	N/A	6	3639-NM-11-2024-C0C06936-1 to 6
NM RPS Active	9aa7ddf2-4ffc	W3641	EPENMAGG1s NM007S	EPENMAGG1s NM007S	Solar	11/1/2024	11/1/2024	11/30/2024	NM	N/A	2	3641-NM-11-2024-53F146D0-1 to 2
NM RPS Active	9aa7ddf2-4ffc	W3642	EPENMAGG1s NM008S	EPENMAGG1s NM008S	Solar	11/1/2024	11/1/2024	11/30/2024	NM	N/A	4	3642-NM-11-2024-35387E61-1 to 4
NM RPS Active	9aa7ddf2-4ffc	W3643	EPENMAGG1s NM009S	EPENMAGG1s NM009S	Solar	11/1/2024	11/1/2024	11/30/2024	NM	N/A	4	3643-NM-11-2024-F00FE140-1 to 4
NM RPS Active	9aa7ddf2-4ffc	W3644	EPENMAGG1S NM010S	EPENMAGG1S NM010S	Solar	11/1/2024	11/1/2024	11/30/2024	NM	N/A	3	3644-NM-11-2024-58CC078A-1 to 3
NM RPS Active	9aa7ddf2-4ffc	W3645	EPENMAGG1S NM011S	EPENMAGG1S NM011S	Solar	11/1/2024	11/1/2024	11/30/2024	NM	N/A	2	3645-NM-11-2024-68EC5866-1 to 2
NM RPS Active	9aa7ddf2-4ffc	W3646	EPENMAGG1S NM012S	EPENMAGG1S NM012S	Solar	11/1/2024	11/1/2024	11/30/2024	NM	N/A	4	3646-NM-11-2024-DEF21658-1 to 4
NM RPS Active	9aa7ddf2-4ffc	W3647	EPENMAGG1S NM013S	EPENMAGG1S NM013S	Solar	11/1/2024	11/1/2024	11/30/2024	NM	N/A	4	3647-NM-11-2024-E1D47716-1 to 4
NM RPS Active	9aa7ddf2-4ffc	W3650	EPENMAGG1S NM016S	EPENMAGG1S NM016S	Solar	11/1/2024	11/1/2024	11/30/2024	NM	N/A	4	3650-NM-11-2024-88E66794-1 to 4
NM RPS Active	9aa7ddf2-4ffc	W3651	EPENMAGG1S NM017S	EPENMAGG1S NM017S	Solar	11/1/2024	11/1/2024	11/30/2024	NM	N/A	5	3651-NM-11-2024-28EF6487-1 to 5
NM RPS Active	9aa7ddf2-4ffc	W3652	EPENMAGG1S NM018S	EPENMAGG1S NM018S	Solar	11/1/2024	11/1/2024	11/30/2024	NM	N/A	7	3652-NM-11-2024-0C10CBA1-1 to 7
NM RPS Active	9aa7ddf2-4ffc	W3653	EPENMAGG1S NM019S	EPENMAGG1S NM019S	Solar	11/1/2024	11/1/2024	11/30/2024	NM	N/A	5	3653-NM-11-2024-7C6F41F4-1 to 5
NM RPS Active	9aa7ddf2-4ffc	W3654	EPENMAGG1S NM020S	EPENMAGG1S NM020S	Solar	11/1/2024	11/1/2024	11/30/2024	NM	N/A	4	3654-NM-11-2024-81D3A81A-1 to 4
NM RPS Active	9aa7ddf2-4ffc	W3655	EPENMAGG1S NM021S	EPENMAGG1S NM021S	Solar	11/1/2024	11/1/2024	11/30/2024	NM	N/A	6	3655-NM-11-2024-496BABD4-1 to 6
NM RPS Active	9aa7ddf2-4ffc	W3656	EPENMAGG1S NM022S	EPENMAGG1S NM022S	Solar	11/1/2024	11/1/2024	11/30/2024	NM	N/A	7	3656-NM-11-2024-E4A8CBD5-1 to 7
NM RPS Active	9aa7ddf2-4ffc	W3657	EPENMAGG1S NM023S	EPENMAGG1S NM023S	Solar	11/1/2024	11/1/2024	11/30/2024	NM	N/A	9	3657-NM-11-2024-1FA82FAE-1 to 9
NM RPS Active	9aa7ddf2-4ffc	W3658	EPENMAGG1S NM024S	EPENMAGG1S NM024S	Solar	11/1/2024	11/1/2024	11/30/2024	NM	N/A	5	3658-NM-11-2024-7006897A-1 to 5
NM RPS Active	9aa7ddf2-4ffc	W3659	EPENMAGG1S NM025S	EPENMAGG1S NM025S	Solar	11/1/2024	11/1/2024	11/30/2024	NM	N/A	5	3659-NM-11-2024-FE145043-1 to 5
NM RPS Active	9aa7ddf2-4ffc	W3660	EPENMAGG1S NM026S	EPENMAGG1S NM026S	Solar	11/1/2024	11/1/2024	11/30/2024	NM	N/A	6	3660-NM-11-2024-FC6F43E1-1 to 6
NM RPS Active	9aa7ddf2-4ffc	W3838	EPENMAGG1S NM027S	EPENMAGG1S NM027S	Solar	11/1/2024	11/1/2024	11/30/2024	NM	N/A	8	3838-NM-11-2024-8F6419BD-1 to 8
NM RPS Active	9aa7ddf2-4ffc	W3839	EPENMAGG1S NM028S	EPENMAGG1S NM028S	Solar	11/1/2024	11/1/2024	11/30/2024	NM	N/A	3	3839-NM-11-2024-F403C2BD-1 to 3
NM RPS Active	9aa7ddf2-4ffc	W3946	EPENMAGG1S NM029S	EPENMAGG1S NM029S	Solar	11/1/2024	11/1/2024	11/30/2024	NM	N/A	2	3946-NM-11-2024-D091715F-1 to 2
NM RPS Active	9aa7ddf2-4ffc	W3947	EPENMAGG1S NM030S	EPENMAGG1S NM030S	Solar	11/1/2024	11/1/2024	11/30/2024	NM	N/A	2	3947-NM-11-2024-5F2E1094-1 to 2
NM RPS Active	9aa7ddf2-4ffc	W3948	EPENMAGG1S NM031S	EPENMAGG1S NM031S	Solar	11/1/2024	11/1/2024	11/30/2024	NM	N/A	1	3948-NM-11-2024-1B081EE3-1 to 1
NM RPS Active	9aa7ddf2-4ffc	W3949	EPENMAGG1S NM032S	EPENMAGG1S NM032S	Solar	11/1/2024	11/1/2024	11/30/2024	NM	N/A	2	3949-NM-11-2024-7DC2AFAF-1 to 2
NM RPS Active	9aa7ddf2-4ffc	W3950	EPENMAGG1S NM033S	EPENMAGG1S NM033S	Solar	11/1/2024	11/1/2024	11/30/2024	NM	N/A	1	3950-NM-11-2024-A7D4F06A-1 to 1
NM RPS Active	9aa7ddf2-4ffc	W3952	EPENMAGG1S NM035S	EPENMAGG1S NM035S	Solar	11/1/2024	11/1/2024	11/30/2024	NM	N/A	6	3952-NM-11-2024-0F2322F6-1 to 6
NM RPS Active	9aa7ddf2-4ffc	W4101	EPENMAGG1S NM036S	EPENMAGG1S NM036S	Solar	11/1/2024	11/1/2024	11/30/2024	NM	N/A	6	4101-NM-11-2024-1EAC092B-1 to 6
NM RPS Active	9aa7ddf2-4ffc	W4121	EPENMAGG1S NM037S	EPENMAGG1S NM037S	Solar	11/1/2024	11/1/2024	11/30/2024	NM	N/A	5	4121-NM-11-2024-2A208601-1 to 5
NM RPS Active	9aa7ddf2-4ffc	W4221	EPENMAGG1S NM038S	EPENMAGG1S NM038S	Solar	11/1/2024	11/1/2024	11/30/2024	NM	N/A	8	4221-NM-11-2024-7904C866-1 to 8
NM RPS Active	9aa7ddf2-4ffc	W4270	EPENMAGG1S NM039S	EPENMAGG1S NM039S	Solar	11/1/2024	11/1/2024	11/30/2024	NM	N/A	6	4270-NM-11-2024-2A5EDCD2-1 to 6
NM RPS Active	9aa7ddf2-4ffc	W4341	EPENMAGG1S NM040S	EPENMAGG1S NM040S	Solar	11/1/2024	11/1/2024	11/30/2024	NM	N/A	1	4341-NM-11-2024-9E2C2D4E-1 to 1
NM RPS Active	9aa7ddf2-4ffc	W4412	EPENMAGG1S NM041S	EPENMAGG1S NM041S	Solar	11/1/2024	11/1/2024	11/30/2024	NM	N/A	4	4412-NM-11-2024-8F27D85B-1 to 4
NM RPS Active	9aa7ddf2-4ffc	W4437	EPENMAGG1S NM042S	EPENMAGG1S NM042S	Solar	11/1/2024	11/1/2024	11/30/2024	NM	N/A	6	4437-NM-11-2024-983ECCA8-1 to 6
NM RPS Active	9aa7ddf2-4ffc	W4459	EPENMAGG1S NM043S	EPENMAGG1S NM043S	Solar	11/1/2024	11/1/2024	11/30/2024	NM	N/A	8	4459-NM-11-2024-2BEC40C7-1 to 8
NM RPS Active	9aa7ddf2-4ffc	W4507	EPENMAGG1S NM044S	EPENMAGG1S NM044S	Solar	11/1/2024	11/1/2024	11/30/2024	NM	N/A	6	4507-NM-11-2024-3DB2CD43-1 to 6
NM RPS Active	9aa7ddf2-4ffc	W4649	EPENMAGG1S NM045S	EPENMAGG1S NM045S	Solar	11/1/2024	11/1/2024	11/30/2024	NM	N/A	4	4649-NM-11-2024-B6FC90B5-1 to 4

Account	Account ID	WREGIS GU ID	Unit Name	Facility Name	Fuel Type	Vintage	Generation Start Date	Generation End Date	Generator Location	Eligility	Quantity (RECs)	Serial Numbers
NM RPS Active	9aa7ddf2-4ffc	W4704	EPENMAGG1S NM046S	EPENMAGG1S NM046S	Solar	11/1/2024	11/1/2024	11/30/2024	NM	N/A	6	4704-NM-11-2024-0D5DDD14-1 to 6
NM RPS Active	9aa7ddf2-4ffc	W4732	EPENMAGG1S NM047S	EPENMAGG1S NM047S	Solar	11/1/2024	11/1/2024	11/30/2024	NM	N/A	5	4732-NM-11-2024-EB3028E8-1 to 5
NM RPS Active	9aa7ddf2-4ffc	W4806	EPENMAGG1S NM048S	EPENMAGG1S NM048S	Solar	11/1/2024	11/1/2024	11/30/2024	NM	N/A	4	4806-NM-11-2024-C6369CB1-1 to 4
NM RPS Active	9aa7ddf2-4ffc	W4833	EPENMAGG1S NM049S	EPENMAGG1S NM049S	Solar	11/1/2024	11/1/2024	11/30/2024	NM	N/A	3	4833-NM-11-2024-76237205-1 to 3
NM RPS Active	9aa7ddf2-4ffc	W4842	EPENMAGG1S NM050S	EPENMAGG1S NM050S	Solar	11/1/2024	11/1/2024	11/30/2024	NM	N/A	5	4842-NM-11-2024-1B03A323-1 to 5
NM RPS Active	9aa7ddf2-4ffc	W4843	EPENMAGG1S NM051S	EPENMAGG1S NM051S	Solar	11/1/2024	11/1/2024	11/30/2024	NM	N/A	4	4843-NM-11-2024-5AD7FD97-1 to 4
NM RPS Active	9aa7ddf2-4ffc	W4961	EPENMAGG1S NM052S	EPENMAGG1S NM052S	Solar	11/1/2024	11/1/2024	11/30/2024	NM	N/A	3	4961-NM-11-2024-AE314049-1 to 3
NM RPS Active	9aa7ddf2-4ffc	W5022	EPENMAGG1S NM053S	EPENMAGG1S NM053S	Solar	11/1/2024	11/1/2024	11/30/2024	NM	N/A	4	5022-NM-11-2024-A3940797-1 to 4
NM RPS Active	9aa7ddf2-4ffc	W5071	EPENMAGG1S NM054S	EPENMAGG1S NM054S	Solar	11/1/2024	11/1/2024	11/30/2024	NM	N/A	4	5071-NM-11-2024-792ECF5F-1 to 4
NM RPS Active	9aa7ddf2-4ffc	W5080	EPENMAGG1S NM056S	EPENMAGG1S NM056S	Solar	11/1/2024	11/1/2024	11/30/2024	NM	N/A	4	5080-NM-11-2024-AC586F2D-1 to 4
NM RPS Active	9aa7ddf2-4ffc	W5111	EPENMAGG1S NM057S	EPENMAGG1S NM057S	Solar	11/1/2024	11/1/2024	11/30/2024	NM	N/A	8	5111-NM-11-2024-69C7525E-1 to 8
NM RPS Active	9aa7ddf2-4ffc	W5112	EPENMAGG1S NM058S	EPENMAGG1S NM058S	Solar	11/1/2024	11/1/2024	11/30/2024	NM	N/A	4	5112-NM-11-2024-89B3B3D0-1 to 4
NM RPS Active	9aa7ddf2-4ffc	W5280	EPENMAGG1S NM059S	EPENMAGG1S NM059S	Solar	11/1/2024	11/1/2024	11/30/2024	NM	N/A	3	5280-NM-11-2024-D2F36049-1 to 3
NM RPS Active	9aa7ddf2-4ffc	W5318	EPENMAGG1S NM060S	EPENMAGG1S NM060S	Solar	11/1/2024	11/1/2024	11/30/2024	NM	SMUD	4	5318-NM-11-2024-6FABA36A-1 to 4
NM RPS Active	9aa7ddf2-4ffc	W5320	EPENMAGG1S NM062S	EPENMAGG1S NM062S	Solar	11/1/2024	11/1/2024	11/30/2024	NM	N/A	6	5320-NM-11-2024-5B0854F1-1 to 6
NM RPS Active	9aa7ddf2-4ffc	W5379	EPENMAGG1S NM063S	EPENMAGG1S NM063S	Solar	11/1/2024	11/1/2024	11/30/2024	NM	N/A	3	5379-NM-11-2024-6D15764E-1 to 3
NM RPS Active	9aa7ddf2-4ffc	W5469	EPENMAGG1S NM064S	EPENMAGG1S NM064S	Solar	11/1/2024	11/1/2024	11/30/2024	NM	N/A	4	5469-NM-11-2024-449515D4-1 to 4
NM RPS Active	9aa7ddf2-4ffc	W5547	EPENMAGG1S NM065S	EPENMAGG1S NM065S	Solar	11/1/2024	11/1/2024	11/30/2024	NM	N/A	3	5547-NM-11-2024-947C00C7-1 to 3
NM RPS Active	9aa7ddf2-4ffc	W5652	EPENMAGG1S NM067S	EPENMAGG1S NM067S	Solar	11/1/2024	11/1/2024	11/30/2024	NM	N/A	4	5652-NM-11-2024-478F24EA-1 to 4
NM RPS Active	9aa7ddf2-4ffc	W5742	EPENMAGG1S NM070S	EPENMAGG1S NM070S	Solar	11/1/2024	11/1/2024	11/30/2024	NM	N/A	5	5742-NM-11-2024-8AEB86F4-1 to 5
NM RPS Active	9aa7ddf2-4ffc	W5790	EPENMAGG1S NM071S	EPENMAGG1S NM071S	Solar	11/1/2024	11/1/2024	11/30/2024	NM	N/A	3	5790-NM-11-2024-FA278838-1 to 3
NM RPS Active	9aa7ddf2-4ffc	W5869	EPENMAGG1S NM073S	EPENMAGG1S NM073S	Solar	11/1/2024	11/1/2024	11/30/2024	NM	N/A	3	5869-NM-11-2024-18DD1CD0-1 to 3
NM RPS Active	9aa7ddf2-4ffc	W7116	EPENMAGG1S NM074S	EPENMAGG1S NM074S	Solar	11/1/2024	11/1/2024	11/30/2024	NM	N/A	3	7116-NM-11-2024-C97C360F-1 to 3
NM RPS Active	9aa7ddf2-4ffc	W7117	EPENMAGG1S NM075S	EPENMAGG1S NM075S	Solar	11/1/2024	11/1/2024	11/30/2024	NM	N/A	5	7117-NM-11-2024-D6C34319-1 to 5
NM RPS Active	9aa7ddf2-4ffc	W7118	EPENMAGG1S NM076S	EPENMAGG1S NM076S	Solar	11/1/2024	11/1/2024	11/30/2024	NM	N/A	4	7118-NM-11-2024-88FC879D-1 to 4
NM RPS Active	9aa7ddf2-4ffc	W7119	EPENMAGG1S NM077S	EPENMAGG1S NM077S	Solar	11/1/2024	11/1/2024	11/30/2024	NM	N/A	7	7119-NM-11-2024-822C0448-1 to 7
NM RPS Active	9aa7ddf2-4ffc	W7120	EPENMAGG1S NM078S	EPENMAGG1S NM078S	Solar	11/1/2024	11/1/2024	11/30/2024	NM	N/A	3	7120-NM-11-2024-13A91A5F-1 to 3
NM RPS Active	9aa7ddf2-4ffc	W7121	EPENMAGG1S NM079S	EPENMAGG1S NM079S	Solar	11/1/2024	11/1/2024	11/30/2024	NM	N/A	4	7121-NM-11-2024-9325E911-1 to 4
NM RPS Active	9aa7ddf2-4ffc	W7324	EPENMAGG1S NM080S	EPENMAGG1S NM080S	Solar	11/1/2024	11/1/2024	11/30/2024	NM	N/A	6	7324-NM-11-2024-9BB4E687-1 to 6
NM RPS Active	9aa7ddf2-4ffc	W7325	EPENMAGG1S NM081S	EPENMAGG1S NM081S	Solar	11/1/2024	11/1/2024	11/30/2024	NM	N/A	5	7325-NM-11-2024-7949525A-1 to 5
NM RPS Active	9aa7ddf2-4ffc	W7332	EPENMAGG1S NM082S	EPENMAGG1S NM082S	Solar	11/1/2024	11/1/2024	11/30/2024	NM	N/A	5	7332-NM-11-2024-1B50C964-1 to 5
NM RPS Active	9aa7ddf2-4ffc	W7333	EPENMAGG1S NM083S	EPENMAGG1S NM083S	Solar	11/1/2024	11/1/2024	11/30/2024	NM	N/A	6	7333-NM-11-2024-EDCFEDE4-1 to 6
NM RPS Active	9aa7ddf2-4ffc	W7424	EPENMAGG1S NM084S	EPENMAGG1S NM084S	Solar	11/1/2024	11/1/2024	11/30/2024	NM	N/A	4	7424-NM-11-2024-A957CB7A-1 to 4
NM RPS Active	9aa7ddf2-4ffc	W7425	EPENMAGG1S NM085S	EPENMAGG1S NM085S	Solar	11/1/2024	11/1/2024	11/30/2024	NM	N/A	3	7425-NM-11-2024-1815DE10-1 to 3
NM RPS Active	9aa7ddf2-4ffc	W7547	EPENMAGG1S NM086S	EPENMAGG1S NM086S	Solar	11/1/2024	11/1/2024	11/30/2024	NM	N/A	3	7547-NM-11-2024-CCCC83DA-1 to 3
NM RPS Active	9aa7ddf2-4ffc	W7554	EPENMAGG1S NM087S	EPENMAGG1S NM087S	Solar	11/1/2024	11/1/2024	11/30/2024	NM	N/A	5	7554-NM-11-2024-DB214C19-1 to 5
NM RPS Active	9aa7ddf2-4ffc	W7555	EPENMAGG1S NM088S	EPENMAGG1S NM088S	Solar	11/1/2024	11/1/2024	11/30/2024	NM	N/A	2	7555-NM-11-2024-CF683CEA-1 to 2
NM RPS Active	9aa7ddf2-4ffc	W7556	EPENMAGG1S NM089S	EPENMAGG1S NM089S	Solar	11/1/2024	11/1/2024	11/30/2024	NM	N/A	3	7556-NM-11-2024-9DBA94B4-1 to 3
NM RPS Active	9aa7ddf2-4ffc	W7557	EPENMAGG1S NM090S	EPENMAGG1S NM090S	Solar	11/1/2024	11/1/2024	11/30/2024	NM	N/A	2	7557-NM-11-2024-EF8BA9AC-1 to 2
NM RPS Active	9aa7ddf2-4ffc	W7558	EPENMAGG1S NM091S	EPENMAGG1S NM091S	Solar	11/1/2024	11/1/2024	11/30/2024	NM	N/A	5	7558-NM-11-2024-BF555C12-1 to 5
NM RPS Active	9aa7ddf2-4ffc	W7559	EPENMAGG1S NM092S	EPENMAGG1S NM092S	Solar	11/1/2024	11/1/2024	11/30/2024	NM	N/A	5	7559-NM-11-2024-84D77565-1 to 5
NM RPS Active	9aa7ddf2-4ffc	W7561	EPENMAGG1S NM093S	EPENMAGG1S NM093S	Solar	11/1/2024	11/1/2024	11/30/2024	NM	N/A	3	7561-NM-11-2024-49C634EC-1 to 3
NM RPS Active	9aa7ddf2-4ffc	W7671	EPENMAGG1S NM094S	EPENMAGG1S NM094S	Solar	11/1/2024	11/1/2024	11/30/2024	NM	N/A	3	7671-NM-11-2024-79C62B47-1 to 3
NM RPS Active	9aa7ddf2-4ffc	W7672	EPENMAGG1S NM095S	EPENMAGG1S NM095S	Solar	11/1/2024	11/1/2024	11/30/2024	NM	N/A	5	7672-NM-11-2024-BF4CB1D4-1 to 5
NM RPS Active	9aa7ddf2-4ffc	W7673	EPENMAGG1S NM096S	EPENMAGG1S NM096S	Solar	11/1/2024	11/1/2024	11/30/2024	NM	N/A	3	7673-NM-11-2024-839B1FE7-1 to 3
NM RPS Active	9aa7ddf2-4ffc	W7674	EPENMAGG1S NM097S	EPENMAGG1S NM097S	Solar	11/1/2024	11/1/2024	11/30/2024	NM	N/A	4	7674-NM-11-2024-1A5F1282-1 to 4
NM RPS Active	9aa7ddf2-4ffc	W7699	EPENMAGG1S NM098S	EPENMAGG1S NM098S	Solar	11/1/2024	11/1/2024	11/30/2024	NM	N/A	3	7699-NM-11-2024-29192103-1 to 3
NM RPS Active	9aa7ddf2-4ffc	W7700	EPENMAGG1S NM099S	EPENMAGG1S NM099S	Solar	11/1/2024	11/1/2024	11/30/2024	NM	N/A	4	7700-NM-11-2024-458D3A80-1 to 4
NM RPS Active	9aa7ddf2-4ffc	W8123	EPENMAGG1S NM100S	EPENMAGG1S NM100S	Solar	11/1/2024	11/1/2024	11/30/2024	NM	N/A	3	8123-NM-11-2024-2B00DACE-1 to 3
NM RPS Active	9aa7ddf2-4ffc	W8124	EPENMAGG1S NM101S	EPENMAGG1S NM101S	Solar	11/1/2024	11/1/2024	11/30/2024	NM	N/A	6	8124-NM-11-2024-144081FD-1 to 6
NM RPS Active	9aa7ddf2-4ffc	W8197	EPENMAGG1S NM102S	EPENMAGG1S NM102S	Solar	11/1/2024	11/1/2024	11/30/2024	NM	N/A	2	8197-NM-11-2024-B3A4C6AC-1 to 2
NM RPS Active	9aa7ddf2-4ffc	W8198	EPENMAGG1S NM103S	EPENMAGG1S NM103S	Solar	11/1/2024	11/1/2024	11/30/2024	NM	N/A	3	8198-NM-11-2024-8EFAE949-1 to 3
NM RPS Active	9aa7ddf2-4ffc	W8794	EPENMAGG1S NM104S	EPENMAGG1S NM104S	Solar	11/1/2024	11/1/2024	11/30/2024	NM	N/A	7	8794-NM-11-2024-DE27C05D-1 to 7
NM RPS Active	9aa7ddf2-4ffc	W8835	EPENMAGG1S NM105S	EPENMAGG1S NM105S	Solar	11/1/2024	11/1/2024	11/30/2024	NM	N/A	5	8835-NM-11-2024-67D1B602-1 to 5
NM RPS Active	9aa7ddf2-4ffc	W8836	EPENMAGG1S NM106S	EPENMAGG1S NM106S	Solar	11/1/2024	11/1/2024	11/30/2024	NM	N/A	3	8836-NM-11-2024-AFE33405-1 to 3
NM RPS Active	9aa7ddf2-4ffc	W9324	EPENMAGG1S NM107S	EPENMAGG1S NM107S	Solar	11/1/2024	11/1/2024	11/30/2024	NM	N/A	5	9324-NM-11-2024-B59EA04F-1 to 5
NM RPS Active	9aa7ddf2-4ffc	W9325	EPENMAGG1S NM108S	EPENMAGG1S NM108S	Solar	11/1/2024	11/1/2024	11/30/2024	NM	N/A	4	9325-NM-11-2024-7B307EB1-1 to 4
NM RPS Active	9aa7ddf2-4ffc	W9344	EPENMAGG1S NM109S	EPENMAGG1S NM109S	Solar	11/1/2024	11/1/2024	11/30/2024	NM	N/A	4	9344-NM-11-2024-62D222FA-1 to 4

Account	Account ID	WREGIS GU ID	Unit Name	Facility Name	Fuel Type	Vintage	Generation Start Date	Generation End Date	Generator Location	Eligility	Quantity (RECs)	Serial Numbers
NM RPS Active	9aa7ddf2-4ffc	W9345	EPENMAGG1S NM110S	EPENMAGG1S NM110S	Solar	11/1/2024	11/1/2024	11/30/2024	NM	N/A	4	9345-NM-11-2024-CD12934D-1 to 4
NM RPS Active	9aa7ddf2-4ffc	W9602	EPENMAGG1S NM111S	EPENMAGG1S NM111S	Solar	11/1/2024	11/1/2024	11/30/2024	NM	N/A	5	9602-NM-11-2024-9E003A14-1 to 5
NM RPS Active	9aa7ddf2-4ffc	W9603	EPENMAGG1S NM112S	EPENMAGG1S NM112S	Solar	11/1/2024	11/1/2024	11/30/2024	NM	N/A	4	9603-NM-11-2024-B346BEFE-1 to 4
NM RPS Active	9aa7ddf2-4ffc	W10025	EPENMAGG1S NM113S	EPENMAGG1S NM113S	Solar	11/1/2024	11/1/2024	11/30/2024	NM	N/A	5	10025-NM-11-2024-4DCE57A0-1 to 5
NM RPS Active	9aa7ddf2-4ffc	W10026	EPENMAGG1S NM114S	EPENMAGG1S NM114S	Solar	11/1/2024	11/1/2024	11/30/2024	NM	N/A	3	10026-NM-11-2024-DDD99CCC-1 to 3
NM RPS Active	9aa7ddf2-4ffc	W10027	EPENMAGG1S NM115S	EPENMAGG1S NM115S	Solar	11/1/2024	11/1/2024	11/30/2024	NM	N/A	4	10027-NM-11-2024-B631A5E1-1 to 4
NM RPS Active	9aa7ddf2-4ffc	W10105	EPENMAGG1S NM116S	EPENMAGG1S NM116S	Solar	11/1/2024	11/1/2024	11/30/2024	NM	N/A	3	10105-NM-11-2024-F6F7471D-1 to 3
NM RPS Active	9aa7ddf2-4ffc	W10106	EPENMAGG1S NM117S	EPENMAGG1S NM117S	Solar	11/1/2024	11/1/2024	11/30/2024	NM	N/A	3	10106-NM-11-2024-A3CD5DFE-1 to 3
NM RPS Active	9aa7ddf2-4ffc	W10107	EPENMAGG1S NM118S	EPENMAGG1S NM118S	Solar	11/1/2024	11/1/2024	11/30/2024	NM	N/A	4	10107-NM-11-2024-945C78D3-1 to 4
NM RPS Active	9aa7ddf2-4ffc	W10167	EPENMAGG1S NM119S	EPENMAGG1S NM119S	Solar	11/1/2024	11/1/2024	11/30/2024	NM	N/A	5	10167-NM-11-2024-1BF62118-1 to 5
NM RPS Active	9aa7ddf2-4ffc	W10460	EPENMAGG1S NM121S	EPENMAGG1S NM121S	Solar	11/1/2024	11/1/2024	11/30/2024	NM	N/A	5	10460-NM-11-2024-1914977A-1 to 5
NM RPS Active	9aa7ddf2-4ffc	W10461	EPENMAGG1S NM122S	EPENMAGG1S NM122S	Solar	11/1/2024	11/1/2024	11/30/2024	NM	N/A	6	10461-NM-11-2024-7784431B-1 to 6
NM RPS Active	9aa7ddf2-4ffc	W10695	EPENMAGG1S NM124S	EPENMAGG1S NM124S	Solar	11/1/2024	11/1/2024	11/30/2024	NM	N/A	4	10695-NM-11-2024-7334161E-1 to 4
NM RPS Active	9aa7ddf2-4ffc	W10800	EPENMAGG1S NM125S	EPENMAGG1S NM125S	Solar	11/1/2024	11/1/2024	11/30/2024	NM	N/A	3	10800-NM-11-2024-0A24D3E5-1 to 3
NM RPS Active	9aa7ddf2-4ffc	W10820	EPENMAGG1S NM126S	EPENMAGG1S NM126S	Solar	11/1/2024	11/1/2024	11/30/2024	NM	N/A	2	10820-NM-11-2024-E6744F62-1 to 2
NM RPS Active	9aa7ddf2-4ffc	W10821	EPENMAGG1S NM127S	EPENMAGG1S NM127S	Solar	11/1/2024	11/1/2024	11/30/2024	NM	N/A	5	10821-NM-11-2024-6F92522A-1 to 5
NM RPS Active	9aa7ddf2-4ffc	W10867	EPENMAGG1S NM128S	EPENMAGG1S NM128S	Solar	11/1/2024	11/1/2024	11/30/2024	NM	N/A	3	10867-NM-11-2024-3323CC14-1 to 3
NM RPS Active	9aa7ddf2-4ffc	W10868	EPENMAGG1S NM129S	EPENMAGG1S NM129S	Solar	11/1/2024	11/1/2024	11/30/2024	NM	N/A	5	10868-NM-11-2024-8A85814D-1 to 5
NM RPS Active	9aa7ddf2-4ffc	W10925	EPENMAGG1S NM131S	EPENMAGG1S NM131S	Solar	11/1/2024	11/1/2024	11/30/2024	NM	N/A	3	10925-NM-11-2024-60C2093A-1 to 3
NM RPS Active	9aa7ddf2-4ffc	W10926	EPENMAGG1S NM132S	EPENMAGG1S NM132S	Solar	11/1/2024	11/1/2024	11/30/2024	NM	N/A	2	10926-NM-11-2024-E9E32040-1 to 2
NM RPS Active	9aa7ddf2-4ffc	W11361	EPENMAGG1S NM133S	EPENMAGG1S NM133S	Solar	11/1/2024	11/1/2024	11/30/2024	NM	N/A	4	11361-NM-11-2024-D1DE9929-1 to 4
NM RPS Active	9aa7ddf2-4ffc	W11363	EPENMAGG1S NM135S	EPENMAGG1S NM135S	Solar	11/1/2024	11/1/2024	11/30/2024	NM	N/A	6	11363-NM-11-2024-F835C520-1 to 6
NM RPS Active	9aa7ddf2-4ffc	W11374	EPENMAGG1S NM136S	EPENMAGG1S NM136S	Solar	11/1/2024	11/1/2024	11/30/2024	NM	N/A	4	11374-NM-11-2024-A71D4735-1 to 4
NM RPS Active	9aa7ddf2-4ffc	W11375	EPENMAGG1S NM137S	EPENMAGG1S NM137S	Solar	11/1/2024	11/1/2024	11/30/2024	NM	N/A	8	11375-NM-11-2024-5F7E2FF1-1 to 8
NM RPS Active	9aa7ddf2-4ffc	W11377	EPENMAGG1S NM138S	EPENMAGG1S NM138S	Solar	11/1/2024	11/1/2024	11/30/2024	NM	N/A	6	11377-NM-11-2024-0D482D52-1 to 6
NM RPS Active	9aa7ddf2-4ffc	W11378	EPENMAGG1S NM139S	EPENMAGG1S NM139S	Solar	11/1/2024	11/1/2024	11/30/2024	NM	N/A	5	11378-NM-11-2024-AFFBD831-1 to 5
NM RPS Active	9aa7ddf2-4ffc	W11379	EPENMAGG1S NM140S	EPENMAGG1S NM140S	Solar	11/1/2024	11/1/2024	11/30/2024	NM	N/A	7	11379-NM-11-2024-4C653582-1 to 7
NM RPS Active	9aa7ddf2-4ffc	W11381	EPENMAGG1S NM141S	EPENMAGG1S NM141S	Solar	11/1/2024	11/1/2024	11/30/2024	NM	N/A	6	11381-NM-11-2024-EA3D34F2-1 to 6
NM RPS Active	9aa7ddf2-4ffc	W11382	EPENMAGG1S NM142S	EPENMAGG1S NM142S	Solar	11/1/2024	11/1/2024	11/30/2024	NM	N/A	5	11382-NM-11-2024-9A70E6D8-1 to 5
NM RPS Active	9aa7ddf2-4ffc	W11383	EPENMAGG1S NM143S	EPENMAGG1S NM143S	Solar	11/1/2024	11/1/2024	11/30/2024	NM	N/A	6	11383-NM-11-2024-F463D624-1 to 6
NM RPS Active	9aa7ddf2-4ffc	W11384	EPENMAGG1S NM144S	EPENMAGG1S NM144S	Solar	11/1/2024	11/1/2024	11/30/2024	NM	N/A	5	11384-NM-11-2024-F9438551-1 to 5
NM RPS Active	9aa7ddf2-4ffc	W11968	EPENMAGG1S NM145S	EPENMAGG1S NM145S	Solar	11/1/2024	11/1/2024	11/30/2024	NM	N/A	7	11968-NM-11-2024-6056CBB6-1 to 7
NM RPS Active	9aa7ddf2-4ffc	W11969	EPENMAGG1S NM146S	EPENMAGG1S NM146S	Solar	11/1/2024	11/1/2024	11/30/2024	NM	N/A	4	11969-NM-11-2024-F8231911-1 to 4
NM RPS Active	9aa7ddf2-4ffc	W11970	EPENMAGG1S NM147S	EPENMAGG1S NM147S	Solar	11/1/2024	11/1/2024	11/30/2024	NM	N/A	8	11970-NM-11-2024-34A9DA08-1 to 8
NM RPS Active	9aa7ddf2-4ffc	W11972	EPENMAGG1S NM149S	EPENMAGG1S NM149S	Solar	11/1/2024	11/1/2024	11/30/2024	NM	N/A	6	11972-NM-11-2024-4CE82A5D-1 to 6
NM RPS Active	9aa7ddf2-4ffc	W11973	EPENMAGG1S NM150S	EPENMAGG1S NM150S	Solar	11/1/2024	11/1/2024	11/30/2024	NM	N/A	8	11973-NM-11-2024-EF805502-1 to 8
NM RPS Active	9aa7ddf2-4ffc	W11974	EPENMAGG1S NM151S	EPENMAGG1S NM151S	Solar	11/1/2024	11/1/2024	11/30/2024	NM	N/A	5	11974-NM-11-2024-813FAE3D-1 to 5
NM RPS Active	9aa7ddf2-4ffc	W11975	EPENMAGG1S NM152S	EPENMAGG1S NM152S	Solar	11/1/2024	11/1/2024	11/30/2024	NM	N/A	6	11975-NM-11-2024-5505A68D-1 to 6
NM RPS Active	9aa7ddf2-4ffc	W11976	EPENMAGG1S NM153S	EPENMAGG1S NM153S	Solar	11/1/2024	11/1/2024	11/30/2024	NM	N/A	6	11976-NM-11-2024-D6C0EDB7-1 to 6
NM RPS Active	9aa7ddf2-4ffc	W11977	EPENMAGG1S NM154S	EPENMAGG1S NM154S	Solar	11/1/2024	11/1/2024	11/30/2024	NM	N/A	4	11977-NM-11-2024-CFD6CA78-1 to 4
NM RPS Active	9aa7ddf2-4ffc	W11980	EPENMAGG1S NM156S	EPENMAGG1S NM156S	Solar	11/1/2024	11/1/2024	11/30/2024	NM	N/A	7	11980-NM-11-2024-4820052B-1 to 7
NM RPS Active	9aa7ddf2-4ffc	W11981	EPENMAGG1S NM157S	EPENMAGG1S NM157S	Solar	11/1/2024	11/1/2024	11/30/2024	NM	N/A	7	11981-NM-11-2024-55033B06-1 to 7
NM RPS Active	9aa7ddf2-4ffc	W11982	EPENMAGG1S NM158S	EPENMAGG1S NM158S	Solar	11/1/2024	11/1/2024	11/30/2024	NM	N/A	5	11982-NM-11-2024-94C03B41-1 to 5
NM RPS Active	9aa7ddf2-4ffc	W11984	EPENMAGG1S NM159S	EPENMAGG1S NM159S	Solar	11/1/2024	11/1/2024	11/30/2024	NM	N/A	3	11984-NM-11-2024-6C634D61-1 to 3
NM RPS Active	9aa7ddf2-4ffc	W12098	EPENMAGG1S NM160S	EPENMAGG1S NM160S	Solar	11/1/2024	11/1/2024	11/30/2024	NM	N/A	6	12098-NM-11-2024-A3D1B331-1 to 6
NM RPS Active	9aa7ddf2-4ffc	W12099	EPENMAGG1S NM161S	EPENMAGG1S NM161S	Solar	11/1/2024	11/1/2024	11/30/2024	NM	N/A	7	12099-NM-11-2024-3FF7DF57-1 to 7
NM RPS Active	9aa7ddf2-4ffc	W12100	EPENMAGG1S NM162S	EPENMAGG1S NM162S	Solar	11/1/2024	11/1/2024	11/30/2024	NM	N/A	7	12100-NM-11-2024-ABD31374-1 to 7
NM RPS Active	9aa7ddf2-4ffc	W12101	EPENMAGG1S NM163S	EPENMAGG1S NM163S	Solar	11/1/2024	11/1/2024	11/30/2024	NM	N/A	6	12101-NM-11-2024-7790C405-1 to 6
NM RPS Active	9aa7ddf2-4ffc	W12188	EPENMAGG1S NM164S	EPENMAGG1S NM164S	Solar	11/1/2024	11/1/2024	11/30/2024	NM	N/A	5	12188-NM-11-2024-E9E1E280-1 to 5
NM RPS Active	9aa7ddf2-4ffc	W12260	EPENMAGG1S NM168S	EPENMAGG1S NM168S	Solar	11/1/2024	11/1/2024	11/30/2024	NM	N/A	6	12260-NM-11-2024-AA4C1101-1 to 6
NM RPS Active	9aa7ddf2-4ffc	W12643	EPENMAGG1S NM170S	EPENMAGG1S NM170S	Solar	11/1/2024	11/1/2024	11/30/2024	NM	N/A	7	12643-NM-11-2024-7D8677D8-1 to 7
NM RPS Active	9aa7ddf2-4ffc	W12646	EPENMAGG1S NM173S	EPENMAGG1S NM173S	Solar	11/1/2024	11/1/2024	11/30/2024	NM	N/A	7	12646-NM-11-2024-7CE73A05-1 to 7
NM RPS Active	9aa7ddf2-4ffc	W12651	EPENMAGG1S NM176S	EPENMAGG1S NM176S	Solar	11/1/2024	11/1/2024	11/30/2024	NM	N/A	7	12651-NM-11-2024-7345B0E8-1 to 7
NM RPS Active	9aa7ddf2-4ffc	W12702	EPENMAGG1S NM177S	EPENMAGG1S NM177S	Solar	11/1/2024	11/1/2024	11/30/2024	NM	N/A	8	12702-NM-11-2024-F7FADA1D-1 to 8
NM RPS Active	9aa7ddf2-4ffc	W12703	EPENMAGG1S NM178S	EPENMAGG1S NM178S	Solar	11/1/2024	11/1/2024	11/30/2024	NM	N/A	8	12703-NM-11-2024-0319771D-1 to 8
NM RPS Active	9aa7ddf2-4ffc	W12704	EPENMAGG1S NM179S	EPENMAGG1S NM179S	Solar	11/1/2024	11/1/2024	11/30/2024	NM	N/A	6	12704-NM-11-2024-0FE8A6DE-1 to 6
NM RPS Active	9aa7ddf2-4ffc	W12744	EPENMAGG1S NM180S	EPENMAGG1S NM180S	Solar	11/1/2024	11/1/2024	11/30/2024	NM	N/A	5	12744-NM-11-2024-0DE58802-1 to 5
NM RPS Active	9aa7ddf2-4ffc	W12745	EPENMAGG1S NM181S	EPENMAGG1S NM181S	Solar	11/1/2024	11/1/2024	11/30/2024	NM	N/A	6	12745-NM-11-2024-E685CF85-1 to 6

Account	Account ID	WREGIS GU ID	Unit Name	Facility Name	Fuel Type	Vintage	Generation Start Date	Generation End Date	Generator Location	Eligility	Quantity (RECs)	Serial Numbers
NM RPS Active	9aa7ddf2-4ffc	W13207	EPENMAGG1S NM182S	EPENMAGG1S NM182S	Solar	11/1/2024	11/1/2024	11/30/2024	NM	N/A	8	13207-NM-11-2024-0095AB1D-1 to 8
NM RPS Active	9aa7ddf2-4ffc	W13208	EPENMAGG1S NM183S	EPENMAGG1S NM183S	Solar	11/1/2024	11/1/2024	11/30/2024	NM	N/A	6	13208-NM-11-2024-D3077191-1 to 6
NM RPS Active	9aa7ddf2-4ffc	W13211	EPENMAGG1S NM185S	EPENMAGG1S NM185S	Solar	11/1/2024	11/1/2024	11/30/2024	NM	N/A	7	13211-NM-11-2024-A5DBB622-1 to 7
NM RPS Active	9aa7ddf2-4ffc	W13615	EPENMAGG1S NM186S	EPENMAGG1S NM186S	Solar	11/1/2024	11/1/2024	11/30/2024	NM	N/A	7	13615-NM-11-2024-22465601-1 to 7
NM RPS Active	9aa7ddf2-4ffc	W13616	EPENMAGG1S NM187S	EPENMAGG1S NM187S	Solar	11/1/2024	11/1/2024	11/30/2024	NM	N/A	5	13616-NM-11-2024-DF486DA6-1 to 5
NM RPS Active	9aa7ddf2-4ffc	W13701	EPENMAGG1S NM188S	EPENMAGG1S NM188S	Solar	11/1/2024	11/1/2024	11/30/2024	NM	N/A	7	13701-NM-11-2024-C928A8B7-1 to 7
NM RPS Active	9aa7ddf2-4ffc	W13702	EPENMAGG1S NM189S	EPENMAGG1S NM189S	Solar	11/1/2024	11/1/2024	11/30/2024	NM	N/A	6	13702-NM-11-2024-306A4EE0-1 to 6
NM RPS Active	9aa7ddf2-4ffc	W13799	EPENMAGG1S NM190S	EPENMAGG1S NM190S	Solar	11/1/2024	11/1/2024	11/30/2024	NM	N/A	7	13799-NM-11-2024-B82C915B-1 to 7
NM RPS Active	9aa7ddf2-4ffc	W13801	EPENMAGG1S NM191S	EPENMAGG1S NM191S	Solar	11/1/2024	11/1/2024	11/30/2024	NM	N/A	5	13801-NM-11-2024-44B9D0C3-1 to 5
NM RPS Active	9aa7ddf2-4ffc	W13802	EPENMAGG1S NM192S	EPENMAGG1S NM192S	Solar	11/1/2024	11/1/2024	11/30/2024	NM	N/A	8	13802-NM-11-2024-94A94266-1 to 8
NM RPS Active	9aa7ddf2-4ffc	W13803	EPENMAGG1S NM193S	EPENMAGG1S NM193S	Solar	11/1/2024	11/1/2024	11/30/2024	NM	N/A	6	13803-NM-11-2024-93CE5C04-1 to 6
NM RPS Active	9aa7ddf2-4ffc	W13804	EPENMAGG1S NM194S	EPENMAGG1S NM194S	Solar	11/1/2024	11/1/2024	11/30/2024	NM	N/A	6	13804-NM-11-2024-997FCF94-1 to 6
NM RPS Active	9aa7ddf2-4ffc	W13897	EPENMAGG1S NM195S	EPENMAGG1S NM195S	Solar	11/1/2024	11/1/2024	11/30/2024	NM	N/A	5	13897-NM-11-2024-E56BF3CA-1 to 5
NM RPS Active	9aa7ddf2-4ffc	W13898	EPENMAGG1S NM196S	EPENMAGG1S NM196S	Solar	11/1/2024	11/1/2024	11/30/2024	NM	N/A	7	13898-NM-11-2024-A0A7D70C-1 to 7
NM RPS Active	9aa7ddf2-4ffc	W13972	EPENMAGG1S NM197S	EPENMAGG1S NM197S	Solar	11/1/2024	11/1/2024	11/30/2024	NM	N/A	5	13972-NM-11-2024-578F50F1-1 to 5
NM RPS Active	9aa7ddf2-4ffc	W13973	EPENMAGG1S NM198S	EPENMAGG1S NM198S	Solar	11/1/2024	11/1/2024	11/30/2024	NM	N/A	6	13973-NM-11-2024-10315EF2-1 to 6
NM RPS Active	9aa7ddf2-4ffc	W13975	EPENMAGG1S NM199S	EPENMAGG1S NM199S	Solar	11/1/2024	11/1/2024	11/30/2024	NM	N/A	4	13975-NM-11-2024-9F50356B-1 to 4
NM RPS Active	9aa7ddf2-4ffc	W14044	EPENMAGG1S NM200S	EPENMAGG1S NM200S	Solar	11/1/2024	11/1/2024	11/30/2024	NM	N/A	6	14044-NM-11-2024-391D7278-1 to 6
NM RPS Active	9aa7ddf2-4ffc	W14045	EPENMAGG1S NM201S	EPENMAGG1S NM201S	Solar	11/1/2024	11/1/2024	11/30/2024	NM	SMUD	5	14045-NM-11-2024-A4ACA237-1 to 5
NM RPS Active	9aa7ddf2-4ffc	W14046	EPENMAGG1S NM202S	EPENMAGG1S NM202S	Solar	11/1/2024	11/1/2024	11/30/2024	NM	N/A	5	14046-NM-11-2024-A6219683-1 to 5
NM RPS Active	9aa7ddf2-4ffc	W14049	EPENMAGG1S NM204S	EPENMAGG1S NM204S	Solar	11/1/2024	11/1/2024	11/30/2024	NM	SMUD	6	14049-NM-11-2024-43224085-1 to 6
NM RPS Active	9aa7ddf2-4ffc	W14225	N/A	EPENMAGG1S NM205S	Solar	11/1/2024	11/1/2024	11/30/2024	NM	N/A	6	14225-NM-11-2024-AFB39D76-1 to 6
NM RPS Active	9aa7ddf2-4ffc	W14230	N/A	EPENMAGG1S NM206S	Solar	11/1/2024	11/1/2024	11/30/2024	NM	N/A	6	14230-NM-11-2024-72F2D641-1 to 6
NM RPS Active	9aa7ddf2-4ffc	W14334	N/A	EPENMAGG1S NM207S	Solar	11/1/2024	11/1/2024	11/30/2024	NM	N/A	6	14334-NM-11-2024-69B6FE56-1 to 6
NM RPS Active	9aa7ddf2-4ffc	W15470	N/A	EPENMAGG1S NM208S	Solar	11/1/2024	11/1/2024	11/30/2024	NM	N/A	10	15470-NM-11-2024-14D9E38D-1 to 10
NM RPS Active	9aa7ddf2-4ffc	W15471	N/A	EPENMAGG1S NM209S	Solar	11/1/2024	11/1/2024	11/30/2024	NM	N/A	6	15471-NM-11-2024-26142D86-1 to 6
NM RPS Active	9aa7ddf2-4ffc	W15472	N/A	EPENMAGG1S NM210S	Solar	11/1/2024	11/1/2024	11/30/2024	NM	N/A	5	15472-NM-11-2024-F522E9A8-1 to 5
NM RPS Active	9aa7ddf2-4ffc	W15473	N/A	EPENMAGG1S NM211S	Solar	11/1/2024	11/1/2024	11/30/2024	NM	N/A	7	15473-NM-11-2024-2F643B1E-1 to 7
NM RPS Active	9aa7ddf2-4ffc	W15474	N/A	EPENMAGG1S NM212S	Solar	11/1/2024	11/1/2024	11/30/2024	NM	N/A	5	15474-NM-11-2024-772CF592-1 to 5
NM RPS Active	9aa7ddf2-4ffc	W15475	N/A	EPENMAGG1S NM213S	Solar	11/1/2024	11/1/2024	11/30/2024	NM	N/A	9	15475-NM-11-2024-59758975-1 to 9
NM RPS Active	9aa7ddf2-4ffc	W15517	N/A	EPENMAGG1S NM214S	Solar	11/1/2024	11/1/2024	11/30/2024	NM	N/A	6	15517-NM-11-2024-109FED58-1 to 6
NM RPS Active	9aa7ddf2-4ffc	W15518	N/A	EPENMAGG1S NM215S	Solar	11/1/2024	11/1/2024	11/30/2024	NM	N/A	6	15518-NM-11-2024-5F934ECE-1 to 6
NM RPS Active	9aa7ddf2-4ffc	W15519	N/A	EPENMAGG1S NM216S	Solar	11/1/2024	11/1/2024	11/30/2024	NM	N/A	7	15519-NM-11-2024-C4EA9038-1 to 7
NM RPS Active	9aa7ddf2-4ffc	W15520	N/A	EPENMAGG1S NM217S	Solar	11/1/2024	11/1/2024	11/30/2024	NM	N/A	4	15520-NM-11-2024-6F919722-1 to 4
NM RPS Active	9aa7ddf2-4ffc	W15521	N/A	EPENMAGG1S NM218S	Solar	11/1/2024	11/1/2024	11/30/2024	NM	N/A	4	15521-NM-11-2024-6DD32D1D-1 to 4
NM RPS Active	9aa7ddf2-4ffc	W15533	N/A	EPENMAGG1S NM219S	Solar	11/1/2024	11/1/2024	11/30/2024	NM	N/A	7	15533-NM-11-2024-7674EAA0-1 to 7
NM RPS Active	9aa7ddf2-4ffc	W15702	N/A	EPENMAGG1S NM220S	Solar	11/1/2024	11/1/2024	11/30/2024	NM	N/A	6	15702-NM-11-2024-4E29D60C-1 to 6
NM RPS Active	9aa7ddf2-4ffc	W15703	N/A	EPENMAGG1S NM221S	Solar	11/1/2024	11/1/2024	11/30/2024	NM	N/A	8	15703-NM-11-2024-45C5AB69-1 to 8
NM RPS Active	9aa7ddf2-4ffc	W15704	N/A	EPENMAGG1S NM222S	Solar	11/1/2024	11/1/2024	11/30/2024	NM	N/A	8	15704-NM-11-2024-5E374BC4-1 to 8
NM RPS Active	9aa7ddf2-4ffc	W15705	N/A	EPENMAGG1S NM223S	Solar	11/1/2024	11/1/2024	11/30/2024	NM	N/A	8	15705-NM-11-2024-A3B46C46-1 to 8
NM RPS Active	9aa7ddf2-4ffc	W16065	N/A	EPENMAGG1S NM224S	Solar	11/1/2024	11/1/2024	11/30/2024	NM	N/A	6	16065-NM-11-2024-0C4D38CF-1 to 6
NM RPS Active	9aa7ddf2-4ffc	W16066	N/A	EPENMAGG1S NM225S	Solar	11/1/2024	11/1/2024	11/30/2024	NM	N/A	6	16066-NM-11-2024-2C8D11A4-1 to 6
NM RPS Active	9aa7ddf2-4ffc	W16067	N/A	EPENMAGG1S NM226S	Solar	11/1/2024	11/1/2024	11/30/2024	NM	N/A	6	16067-NM-11-2024-8B1847DE-1 to 6
NM RPS Active	9aa7ddf2-4ffc	W16490	N/A	EPENMAGG1S NM227S	Solar	11/1/2024	11/1/2024	11/30/2024	NM	N/A	9	16490-NM-11-2024-F1CD5864-1 to 9
NM RPS Active	9aa7ddf2-4ffc	W16492	N/A	EPENMAGG1S NM229S	Solar	11/1/2024	11/1/2024	11/30/2024	NM	N/A	6	16492-NM-11-2024-04A9EB25-1 to 6
NM RPS Active	9aa7ddf2-4ffc	W16493	N/A	EPENMAGG1S NM230S	Solar	11/1/2024	11/1/2024	11/30/2024	NM	N/A	6	16493-NM-11-2024-7D05EB8D-1 to 6
NM RPS Active	9aa7ddf2-4ffc	W16494	N/A	EPENMAGG1S NM231S	Solar	11/1/2024	11/1/2024	11/30/2024	NM	N/A	5	16494-NM-11-2024-64DD0507-1 to 5
NM RPS Active	9aa7ddf2-4ffc	W17425	N/A	EPENMAGG1S NM232S	Solar	11/1/2024	11/1/2024	11/30/2024	NM	N/A	5	17425-NM-11-2024-59E1A4CF-1 to 5
NM RPS Active	9aa7ddf2-4ffc	W17426	N/A	EPENMAGG1S NM233S	Solar	11/1/2024	11/1/2024	11/30/2024	NM	N/A	7	17426-NM-11-2024-8AADA7CC-1 to 7
NM RPS Active	9aa7ddf2-4ffc	W17427	N/A	EPENMAGG1S NM235S	Solar	11/1/2024	11/1/2024	11/30/2024	NM	N/A	7	17427-NM-11-2024-852F3755-1 to 7
NM RPS Active	9aa7ddf2-4ffc	W17428	N/A	EPENMAGG1S NM236S	Solar	11/1/2024	11/1/2024	11/30/2024	NM	N/A	8	17428-NM-11-2024-225924A2-1 to 8
NM RPS Active	9aa7ddf2-4ffc	W17429	N/A	EPENMAGG1S NM237S	Solar	11/1/2024	11/1/2024	11/30/2024	NM	N/A	8	17429-NM-11-2024-ABC672A6-1 to 8
NM RPS Active	9aa7ddf2-4ffc	W17430	N/A	EPENMAGG1S NM238S	Solar	11/1/2024	11/1/2024	11/30/2024	NM	N/A	8	17430-NM-11-2024-DA16DC5A-1 to 8
NM RPS Active	9aa7ddf2-4ffc	W17431	N/A	EPENMAGG1S NM239S	Solar	11/1/2024	11/1/2024	11/30/2024	NM	N/A	7	17431-NM-11-2024-DFBC2331-1 to 7
NM RPS Active	9aa7ddf2-4ffc	W17432	N/A	EPENMAGG1S NM240S	Solar	11/1/2024	11/1/2024	11/30/2024	NM	N/A	9	17432-NM-11-2024-C95E3E0C-1 to 9
NM RPS Active	9aa7ddf2-4ffc	W17433	N/A	EPENMAGG1S NM241S	Solar	11/1/2024	11/1/2024	11/30/2024	NM	N/A	6	17433-NM-11-2024-65C3328E-1 to 6
NM RPS Active	9aa7ddf2-4ffc	W17434	N/A	EPENMAGG1S NM242S	Solar	11/1/2024	11/1/2024	11/30/2024	NM	N/A	5	17434-NM-11-2024-6F9093AF-1 to 5
NM RPS Active	9aa7ddf2-4ffc	W17435	N/A	EPENMAGG1S NM243S	Solar	11/1/2024	11/1/2024	11/30/2024	NM	N/A	6	17435-NM-11-2024-52FC9182-1 to 6

Account	Account ID	WREGIS GU ID	Unit Name	Facility Name	Fuel Type	Vintage	Generation Start Date	Generation End Date	Generator Location	Eligility	Quantity (RECs)	Serial Numbers
NM RPS Active	9aa7ddf2-4ffc	W17436	N/A	EPENMAGG1S NM244S	Solar	11/1/2024	11/1/2024	11/30/2024	NM	N/A	9	17436-NM-11-2024-BF10943B-1 to 9
NM RPS Active	9aa7ddf2-4ffc	W17546	N/A	EPENMAGG1S NM245S	Solar	11/1/2024	11/1/2024	11/30/2024	NM	N/A	10	17546-NM-11-2024-F83FA702-1 to 10
NM RPS Active	9aa7ddf2-4ffc	W17824	N/A	EPENMAGG1S NM246S	Solar	11/1/2024	11/1/2024	11/30/2024	NM	N/A	5	17824-NM-11-2024-24A1BDC5-1 to 5
NM RPS Active	9aa7ddf2-4ffc	W17825	N/A	EPENMAGG1S NM247S	Solar	11/1/2024	11/1/2024	11/30/2024	NM	N/A	7	17825-NM-11-2024-43CC638F-1 to 7
NM RPS Active	9aa7ddf2-4ffc	W18165	N/A	EPENMAGG1S NM248S	Solar	11/1/2024	11/1/2024	11/30/2024	NM	N/A	8	18165-NM-11-2024-93C3B655-1 to 8
NM RPS Active	9aa7ddf2-4ffc	W18166	N/A	EPENMAGG1S NM249S	Solar	11/1/2024	11/1/2024	11/30/2024	NM	N/A	6	18166-NM-11-2024-B43ED81B-1 to 6
NM RPS Active	9aa7ddf2-4ffc	W18167	N/A	EPENMAGG1S NM250S	Solar	11/1/2024	11/1/2024	11/30/2024	NM	N/A	7	18167-NM-11-2024-A5D69CC4-1 to 7
NM RPS Active	9aa7ddf2-4ffc	W18279	N/A	EPENMAGG1S NM251S	Solar	11/1/2024	11/1/2024	11/30/2024	NM	N/A	8	18279-NM-11-2024-1143AB37-1 to 8
NM RPS Active	9aa7ddf2-4ffc	W18280	N/A	EPENMAGG1S NM252S	Solar	11/1/2024	11/1/2024	11/30/2024	NM	N/A	8	18280-NM-11-2024-1628C48B-1 to 8
NM RPS Active	9aa7ddf2-4ffc	W18547	N/A	EPENMAGG1S NM253S	Solar	11/1/2024	11/1/2024	11/30/2024	NM	N/A	5	18547-NM-11-2024-9F88F6A8-1 to 5
NM RPS Active	9aa7ddf2-4ffc	W18548	N/A	EPENMAGG1S NM254S	Solar	11/1/2024	11/1/2024	11/30/2024	NM	N/A	6	18548-NM-11-2024-CA8BAB70-1 to 6
NM RPS Active	9aa7ddf2-4ffc	W18750	N/A	EPENMAGG1S NM255S	Solar	11/1/2024	11/1/2024	11/30/2024	NM	N/A	5	18750-NM-11-2024-B12B5AC5-1 to 5
NM RPS Active	9aa7ddf2-4ffc	W19059	N/A	EPENMAGG1S NM256S	Solar	11/1/2024	11/1/2024	11/30/2024	NM	N/A	6	19059-NM-11-2024-6E187AFB-1 to 6
NM RPS Active	9aa7ddf2-4ffc	W20226	N/A	EPENMAGG1S NM258S	Solar	11/1/2024	11/1/2024	11/30/2024	NM	N/A	7	20226-NM-11-2024-60514132-1 to 7
NM RPS Active	9aa7ddf2-4ffc	W20227	N/A	EPENMAGG1S NM259S	Solar	11/1/2024	11/1/2024	11/30/2024	NM	N/A	6	20227-NM-11-2024-B318EE22-1 to 6
NM RPS Active	9aa7ddf2-4ffc	W20660	N/A	EPENMAGG1S NM260S	Solar	11/1/2024	11/1/2024	11/30/2024	NM	N/A	6	20660-NM-11-2024-DBABE1E5-1 to 6
NM RPS Active	9aa7ddf2-4ffc	W20661	N/A	EPENMAGG1S NM261S	Solar	11/1/2024	11/1/2024	11/30/2024	NM	N/A	11	20661-NM-11-2024-5F7FB6E8-1 to 11
NM RPS Active	9aa7ddf2-4ffc	W12650	EPE NM175S - City of Las Cruces - Utilities - Waste Water	EPE NM175S	Solar	12/1/2024	12/1/2024	12/31/2024	NM	N/A	2	12650-NM-12-2024-91978BD4-1 to 2
NM RPS Active	9aa7ddf2-4ffc	W3622	EPENMAGG1S NM001S	EPENMAGG1S NM001S	Solar	12/1/2024	12/1/2024	12/31/2024	NM	N/A	3	3622-NM-12-2024-EA692BD7-1 to 3
NM RPS Active	9aa7ddf2-4ffc	W3624	EPENMAGG1S NM002S	EPENMAGG1S NM002S	Solar	12/1/2024	12/1/2024	12/31/2024	NM	N/A	3	3624-NM-12-2024-2AC8BE00-1 to 3
NM RPS Active	9aa7ddf2-4ffc	W3637	EPENMAGG1S NM003S	EPENMAGG1S NM003S	Solar	12/1/2024	12/1/2024	12/31/2024	NM	N/A	4	3637-NM-12-2024-2F01EC80-1 to 4
NM RPS Active	9aa7ddf2-4ffc	W3638	EPENMAGG1S NM004S	EPENMAGG1S NM004S	Solar	12/1/2024	12/1/2024	12/31/2024	NM	N/A	4	3638-NM-12-2024-A6AA7C00-1 to 4
NM RPS Active	9aa7ddf2-4ffc	W3639	EPENMAGG1s NM005S	EPENMAGG1s NM005S	Solar	12/1/2024	12/1/2024	12/31/2024	NM	N/A	3	3639-NM-12-2024-5AD1FAC7-1 to 3
NM RPS Active	9aa7ddf2-4ffc	W3641	EPENMAGG1s NM007S	EPENMAGG1s NM007S	Solar	12/1/2024	12/1/2024	12/31/2024	NM	N/A	2	3641-NM-12-2024-D9EFE05A-1 to 2
NM RPS Active	9aa7ddf2-4ffc	W3642	EPENMAGG1s NM008S	EPENMAGG1s NM008S	Solar	12/1/2024	12/1/2024	12/31/2024	NM	N/A	3	3642-NM-12-2024-BDAEB71C-1 to 3
NM RPS Active	9aa7ddf2-4ffc	W3643	EPENMAGG1s NM009S	EPENMAGG1s NM009S	Solar	12/1/2024	12/1/2024	12/31/2024	NM	N/A	3	3643-NM-12-2024-1BE90897-1 to 3
NM RPS Active	9aa7ddf2-4ffc	W3644	EPENMAGG1S NM010S	EPENMAGG1S NM010S	Solar	12/1/2024	12/1/2024	12/31/2024	NM	N/A	2	3644-NM-12-2024-19E0F1E4-1 to 2
NM RPS Active	9aa7ddf2-4ffc	W3645	EPENMAGG1S NM011S	EPENMAGG1S NM011S	Solar	12/1/2024	12/1/2024	12/31/2024	NM	N/A	3	3645-NM-12-2024-27A1D978-1 to 3
NM RPS Active	9aa7ddf2-4ffc	W3646	EPENMAGG1S NM012S	EPENMAGG1S NM012S	Solar	12/1/2024	12/1/2024	12/31/2024	NM	N/A	4	3646-NM-12-2024-CFD348DE-1 to 4
NM RPS Active	9aa7ddf2-4ffc	W3647	EPENMAGG1S NM013S	EPENMAGG1S NM013S	Solar	12/1/2024	12/1/2024	12/31/2024	NM	N/A	2	3647-NM-12-2024-7BA2BA21-1 to 2
NM RPS Active	9aa7ddf2-4ffc	W3650	EPENMAGG1S NM016S	EPENMAGG1S NM016S	Solar	12/1/2024	12/1/2024	12/31/2024	NM	N/A	1	3650-NM-12-2024-135CB790-1 to 1
NM RPS Active	9aa7ddf2-4ffc	W3651	EPENMAGG1S NM017S	EPENMAGG1S NM017S	Solar	12/1/2024	12/1/2024	12/31/2024	NM	N/A	3	3651-NM-12-2024-FE4508DB-1 to 3
NM RPS Active	9aa7ddf2-4ffc	W3652	EPENMAGG1S NM018S	EPENMAGG1S NM018S	Solar	12/1/2024	12/1/2024	12/31/2024	NM	N/A	5	3652-NM-12-2024-C3C9009E-1 to 5
NM RPS Active	9aa7ddf2-4ffc	W3653	EPENMAGG1S NM019S	EPENMAGG1S NM019S	Solar	12/1/2024	12/1/2024	12/31/2024	NM	N/A	3	3653-NM-12-2024-7DCAFB8F-1 to 3
NM RPS Active	9aa7ddf2-4ffc	W3654	EPENMAGG1S NM020S	EPENMAGG1S NM020S	Solar	12/1/2024	12/1/2024	12/31/2024	NM	N/A	3	3654-NM-12-2024-37C4B4CB-1 to 3
NM RPS Active	9aa7ddf2-4ffc	W3655	EPENMAGG1S NM021S	EPENMAGG1S NM021S	Solar	12/1/2024	12/1/2024	12/31/2024	NM	N/A	4	3655-NM-12-2024-0E4058ED-1 to 4
NM RPS Active	9aa7ddf2-4ffc	W3656	EPENMAGG1S NM022S	EPENMAGG1S NM022S	Solar	12/1/2024	12/1/2024	12/31/2024	NM	N/A	5	3656-NM-12-2024-2E69927C-1 to 5
NM RPS Active	9aa7ddf2-4ffc	W3657	EPENMAGG1S NM023S	EPENMAGG1S NM023S	Solar	12/1/2024	12/1/2024	12/31/2024	NM	N/A	6	3657-NM-12-2024-C17499BD-1 to 6
NM RPS Active	9aa7ddf2-4ffc	W3658	EPENMAGG1S NM024S	EPENMAGG1S NM024S	Solar	12/1/2024	12/1/2024	12/31/2024	NM	N/A	4	3658-NM-12-2024-E8E387DA-1 to 4
NM RPS Active	9aa7ddf2-4ffc	W3659	EPENMAGG1S NM025S	EPENMAGG1S NM025S	Solar	12/1/2024	12/1/2024	12/31/2024	NM	N/A	4	3659-NM-12-2024-6EC752F4-1 to 4
NM RPS Active	9aa7ddf2-4ffc	W3660	EPENMAGG1S NM026S	EPENMAGG1S NM026S	Solar	12/1/2024	12/1/2024	12/31/2024	NM	N/A	2	3660-NM-12-2024-FDD80FA7-1 to 2
NM RPS Active	9aa7ddf2-4ffc	W3838	EPENMAGG1S NM027S	EPENMAGG1S NM027S	Solar	12/1/2024	12/1/2024	12/31/2024	NM	N/A	6	3838-NM-12-2024-9A69E7D6-1 to 6
NM RPS Active	9aa7ddf2-4ffc	W3839	EPENMAGG1S NM028S	EPENMAGG1S NM028S	Solar	12/1/2024	12/1/2024	12/31/2024	NM	N/A	4	3839-NM-12-2024-B4AB8F2E-1 to 4
NM RPS Active	9aa7ddf2-4ffc	W3946	EPENMAGG1S NM029S	EPENMAGG1S NM029S	Solar	12/1/2024	12/1/2024	12/31/2024	NM	N/A	2	3946-NM-12-2024-5E44335D-1 to 2
NM RPS Active	9aa7ddf2-4ffc	W3947	EPENMAGG1S NM030S	EPENMAGG1S NM030S	Solar	12/1/2024	12/1/2024	12/31/2024	NM	N/A	2	3947-NM-12-2024-13A02777-1 to 2
NM RPS Active	9aa7ddf2-4ffc	W3949	EPENMAGG1S NM032S	EPENMAGG1S NM032S	Solar	12/1/2024	12/1/2024	12/31/2024	NM	N/A	2	3949-NM-12-2024-852E7D3A-1 to 2
NM RPS Active	9aa7ddf2-4ffc	W3950	EPENMAGG1S NM033S	EPENMAGG1S NM033S	Solar	12/1/2024	12/1/2024	12/31/2024	NM	N/A	1	3950-NM-12-2024-EA536C97-1 to 1
NM RPS Active	9aa7ddf2-4ffc	W3951	EPENMAGG1S NM034S	EPENMAGG1S NM034S	Solar	12/1/2024	12/1/2024	12/31/2024	NM	N/A	1	3951-NM-12-2024-A9103C5E-1 to 1
NM RPS Active	9aa7ddf2-4ffc	W3952	EPENMAGG1S NM035S	EPENMAGG1S NM035S	Solar	12/1/2024	12/1/2024	12/31/2024	NM	N/A	5	3952-NM-12-2024-99FBAA31-1 to 5
NM RPS Active	9aa7ddf2-4ffc	W4101	EPENMAGG1S NM036S	EPENMAGG1S NM036S	Solar	12/1/2024	12/1/2024	12/31/2024	NM	N/A	4	4101-NM-12-2024-357788EA-1 to 4
NM RPS Active	9aa7ddf2-4ffc	W4121	EPENMAGG1S NM037S	EPENMAGG1S NM037S	Solar	12/1/2024	12/1/2024	12/31/2024	NM	N/A	3	4121-NM-12-2024-4F90E95E-1 to 3
NM RPS Active	9aa7ddf2-4ffc	W4221	EPENMAGG1S NM038S	EPENMAGG1S NM038S	Solar	12/1/2024	12/1/2024	12/31/2024	NM	N/A	5	4221-NM-12-2024-43BA1DB3-1 to 5
NM RPS Active	9aa7ddf2-4ffc	W4270	EPENMAGG1S NM039S	EPENMAGG1S NM039S	Solar	12/1/2024	12/1/2024	12/31/2024	NM	N/A	5	4270-NM-12-2024-A6B4D986-1 to 5
NM RPS Active	9aa7ddf2-4ffc	W4341	EPENMAGG1S NM040S	EPENMAGG1S NM040S	Solar	12/1/2024	12/1/2024	12/31/2024	NM	N/A	1	4341-NM-12-2024-67D6948D-1 to 1
NM RPS Active	9aa7ddf2-4ffc	W4412	EPENMAGG1S NM041S	EPENMAGG1S NM041S	Solar	12/1/2024	12/1/2024	12/31/2024	NM	N/A	1	4412-NM-12-2024-A8B5083E-1 to 1
NM RPS Active	9aa7ddf2-4ffc	W4437	EPENMAGG1S NM042S	EPENMAGG1S NM042S	Solar	12/1/2024	12/1/2024	12/31/2024	NM	N/A	5	4437-NM-12-2024-1E748B4D-1 to 5

Account	Account ID	WREGIS GU ID	Unit Name	Facility Name	Fuel Type	Vintage	Generation Start Date	Generation End Date	Generator Location	Eligility	Quantity (RECs)	Serial Numbers
NM RPS Active	9aa7ddf2-4ffc	W4459	EPENMAGG1S NM043S	EPENMAGG1S NM043S	Solar	12/1/2024	12/1/2024	12/31/2024	NM	N/A	4	4459-NM-12-2024-5B5C4750-1 to 4
NM RPS Active	9aa7ddf2-4ffc	W4507	EPENMAGG1S NM044S	EPENMAGG1S NM044S	Solar	12/1/2024	12/1/2024	12/31/2024	NM	N/A	5	4507-NM-12-2024-CE99A4A1-1 to 5
NM RPS Active	9aa7ddf2-4ffc	W4649	EPENMAGG1S NM045S	EPENMAGG1S NM045S	Solar	12/1/2024	12/1/2024	12/31/2024	NM	N/A	2	4649-NM-12-2024-435833CD-1 to 2
NM RPS Active	9aa7ddf2-4ffc	W4704	EPENMAGG1S NM046S	EPENMAGG1S NM046S	Solar	12/1/2024	12/1/2024	12/31/2024	NM	N/A	6	4704-NM-12-2024-F39597FA-1 to 6
NM RPS Active	9aa7ddf2-4ffc	W4732	EPENMAGG1S NM047S	EPENMAGG1S NM047S	Solar	12/1/2024	12/1/2024	12/31/2024	NM	N/A	2	4732-NM-12-2024-2E19CA0B-1 to 2
NM RPS Active	9aa7ddf2-4ffc	W4806	EPENMAGG1S NM048S	EPENMAGG1S NM048S	Solar	12/1/2024	12/1/2024	12/31/2024	NM	N/A	4	4806-NM-12-2024-FEEC90B0-1 to 4
NM RPS Active	9aa7ddf2-4ffc	W4833	EPENMAGG1S NM049S	EPENMAGG1S NM049S	Solar	12/1/2024	12/1/2024	12/31/2024	NM	N/A	3	4833-NM-12-2024-5AF4C581-1 to 3
NM RPS Active	9aa7ddf2-4ffc	W4842	EPENMAGG1S NM050S	EPENMAGG1S NM050S	Solar	12/1/2024	12/1/2024	12/31/2024	NM	N/A	2	4842-NM-12-2024-1B6D83D0-1 to 2
NM RPS Active	9aa7ddf2-4ffc	W4843	EPENMAGG1S NM051S	EPENMAGG1S NM051S	Solar	12/1/2024	12/1/2024	12/31/2024	NM	N/A	2	4843-NM-12-2024-1127E5EF-1 to 2
NM RPS Active	9aa7ddf2-4ffc	W4961	EPENMAGG1S NM052S	EPENMAGG1S NM052S	Solar	12/1/2024	12/1/2024	12/31/2024	NM	N/A	3	4961-NM-12-2024-4F23DE8A-1 to 3
NM RPS Active	9aa7ddf2-4ffc	W5022	EPENMAGG1S NM053S	EPENMAGG1S NM053S	Solar	12/1/2024	12/1/2024	12/31/2024	NM	N/A	3	5022-NM-12-2024-072A2601-1 to 3
NM RPS Active	9aa7ddf2-4ffc	W5071	EPENMAGG1S NM054S	EPENMAGG1S NM054S	Solar	12/1/2024	12/1/2024	12/31/2024	NM	N/A	3	5071-NM-12-2024-3404C7FC-1 to 3
NM RPS Active	9aa7ddf2-4ffc	W5080	EPENMAGG1S NM056S	EPENMAGG1S NM056S	Solar	12/1/2024	12/1/2024	12/31/2024	NM	N/A	4	5080-NM-12-2024-D2301A96-1 to 4
NM RPS Active	9aa7ddf2-4ffc	W5111	EPENMAGG1S NM057S	EPENMAGG1S NM057S	Solar	12/1/2024	12/1/2024	12/31/2024	NM	N/A	6	5111-NM-12-2024-B39EBBA0-1 to 6
NM RPS Active	9aa7ddf2-4ffc	W5112	EPENMAGG1S NM058S	EPENMAGG1S NM058S	Solar	12/1/2024	12/1/2024	12/31/2024	NM	N/A	3	5112-NM-12-2024-7207D01F-1 to 3
NM RPS Active	9aa7ddf2-4ffc	W5280	EPENMAGG1S NM059S	EPENMAGG1S NM059S	Solar	12/1/2024	12/1/2024	12/31/2024	NM	N/A	2	5280-NM-12-2024-0FBB25EC-1 to 2
NM RPS Active	9aa7ddf2-4ffc	W5318	EPENMAGG1S NM060S	EPENMAGG1S NM060S	Solar	12/1/2024	12/1/2024	12/31/2024	NM	SMUD	4	5318-NM-12-2024-0C1B8A83-1 to 4
NM RPS Active	9aa7ddf2-4ffc	W5320	EPENMAGG1S NM062S	EPENMAGG1S NM062S	Solar	12/1/2024	12/1/2024	12/31/2024	NM	N/A	4	5320-NM-12-2024-2B71782D-1 to 4
NM RPS Active	9aa7ddf2-4ffc	W5379	EPENMAGG1S NM063S	EPENMAGG1S NM063S	Solar	12/1/2024	12/1/2024	12/31/2024	NM	N/A	2	5379-NM-12-2024-D231E9A8-1 to 2
NM RPS Active	9aa7ddf2-4ffc	W5469	EPENMAGG1S NM064S	EPENMAGG1S NM064S	Solar	12/1/2024	12/1/2024	12/31/2024	NM	N/A	2	5469-NM-12-2024-D0C5361A-1 to 2
NM RPS Active	9aa7ddf2-4ffc	W5547	EPENMAGG1S NM065S	EPENMAGG1S NM065S	Solar	12/1/2024	12/1/2024	12/31/2024	NM	N/A	3	5547-NM-12-2024-EDDB36B3-1 to 3
NM RPS Active	9aa7ddf2-4ffc	W5652	EPENMAGG1S NM067S	EPENMAGG1S NM067S	Solar	12/1/2024	12/1/2024	12/31/2024	NM	N/A	3	5652-NM-12-2024-604A0826-1 to 3
NM RPS Active	9aa7ddf2-4ffc	W5742	EPENMAGG1S NM070S	EPENMAGG1S NM070S	Solar	12/1/2024	12/1/2024	12/31/2024	NM	N/A	4	5742-NM-12-2024-46E21E6E-1 to 4
NM RPS Active	9aa7ddf2-4ffc	W5790	EPENMAGG1S NM071S	EPENMAGG1S NM071S	Solar	12/1/2024	12/1/2024	12/31/2024	NM	N/A	2	5790-NM-12-2024-8D809754-1 to 2
NM RPS Active	9aa7ddf2-4ffc	W5869	EPENMAGG1S NM073S	EPENMAGG1S NM073S	Solar	12/1/2024	12/1/2024	12/31/2024	NM	N/A	3	5869-NM-12-2024-87E20373-1 to 3
NM RPS Active	9aa7ddf2-4ffc	W7116	EPENMAGG1S NM074S	EPENMAGG1S NM074S	Solar	12/1/2024	12/1/2024	12/31/2024	NM	N/A	1	7116-NM-12-2024-321030D9-1 to 1
NM RPS Active	9aa7ddf2-4ffc	W7117	EPENMAGG1S NM075S	EPENMAGG1S NM075S	Solar	12/1/2024	12/1/2024	12/31/2024	NM	N/A	4	7117-NM-12-2024-2F16FFF1-1 to 4
NM RPS Active	9aa7ddf2-4ffc	W7118	EPENMAGG1S NM076S	EPENMAGG1S NM076S	Solar	12/1/2024	12/1/2024	12/31/2024	NM	N/A	2	7118-NM-12-2024-DC4DE2BA-1 to 2
NM RPS Active	9aa7ddf2-4ffc	W7119	EPENMAGG1S NM077S	EPENMAGG1S NM077S	Solar	12/1/2024	12/1/2024	12/31/2024	NM	N/A	4	7119-NM-12-2024-62FE506C-1 to 4
NM RPS Active	9aa7ddf2-4ffc	W7120	EPENMAGG1S NM078S	EPENMAGG1S NM078S	Solar	12/1/2024	12/1/2024	12/31/2024	NM	N/A	4	7120-NM-12-2024-55146AE4-1 to 4
NM RPS Active	9aa7ddf2-4ffc	W7121	EPENMAGG1S NM079S	EPENMAGG1S NM079S	Solar	12/1/2024	12/1/2024	12/31/2024	NM	N/A	3	7121-NM-12-2024-3C71D205-1 to 3
NM RPS Active	9aa7ddf2-4ffc	W7324	EPENMAGG1S NM080S	EPENMAGG1S NM080S	Solar	12/1/2024	12/1/2024	12/31/2024	NM	N/A	5	7324-NM-12-2024-F9CD4CF8-1 to 5
NM RPS Active	9aa7ddf2-4ffc	W7325	EPENMAGG1S NM081S	EPENMAGG1S NM081S	Solar	12/1/2024	12/1/2024	12/31/2024	NM	N/A	5	7325-NM-12-2024-7E372B4B-1 to 5
NM RPS Active	9aa7ddf2-4ffc	W7332	EPENMAGG1S NM082S	EPENMAGG1S NM082S	Solar	12/1/2024	12/1/2024	12/31/2024	NM	N/A	4	7332-NM-12-2024-D1123F8C-1 to 4
NM RPS Active	9aa7ddf2-4ffc	W7333	EPENMAGG1S NM083S	EPENMAGG1S NM083S	Solar	12/1/2024	12/1/2024	12/31/2024	NM	N/A	5	7333-NM-12-2024-120EA418-1 to 5
NM RPS Active	9aa7ddf2-4ffc	W7424	EPENMAGG1S NM084S	EPENMAGG1S NM084S	Solar	12/1/2024	12/1/2024	12/31/2024	NM	N/A	3	7424-NM-12-2024-07B4E072-1 to 3
NM RPS Active	9aa7ddf2-4ffc	W7425	EPENMAGG1S NM085S	EPENMAGG1S NM085S	Solar	12/1/2024	12/1/2024	12/31/2024	NM	N/A	2	7425-NM-12-2024-D9456C64-1 to 2
NM RPS Active	9aa7ddf2-4ffc	W7547	EPENMAGG1S NM086S	EPENMAGG1S NM086S	Solar	12/1/2024	12/1/2024	12/31/2024	NM	N/A	3	7547-NM-12-2024-2ED3EBB2-1 to 3
NM RPS Active	9aa7ddf2-4ffc	W7554	EPENMAGG1S NM087S	EPENMAGG1S NM087S	Solar	12/1/2024	12/1/2024	12/31/2024	NM	N/A	4	7554-NM-12-2024-F9E58CDD-1 to 4
NM RPS Active	9aa7ddf2-4ffc	W7555	EPENMAGG1S NM088S	EPENMAGG1S NM088S	Solar	12/1/2024	12/1/2024	12/31/2024	NM	N/A	2	7555-NM-12-2024-31C1F673-1 to 2
NM RPS Active	9aa7ddf2-4ffc	W7556	EPENMAGG1S NM089S	EPENMAGG1S NM089S	Solar	12/1/2024	12/1/2024	12/31/2024	NM	N/A	1	7556-NM-12-2024-A4D6DB69-1 to 1
NM RPS Active	9aa7ddf2-4ffc	W7557	EPENMAGG1S NM090S	EPENMAGG1S NM090S	Solar	12/1/2024	12/1/2024	12/31/2024	NM	N/A	2	7557-NM-12-2024-EA1A5CBB-1 to 2
NM RPS Active	9aa7ddf2-4ffc	W7558	EPENMAGG1S NM091S	EPENMAGG1S NM091S	Solar	12/1/2024	12/1/2024	12/31/2024	NM	N/A	4	7558-NM-12-2024-179B578E-1 to 4
NM RPS Active	9aa7ddf2-4ffc	W7559	EPENMAGG1S NM092S	EPENMAGG1S NM092S	Solar	12/1/2024	12/1/2024	12/31/2024	NM	N/A	3	7559-NM-12-2024-20C36120-1 to 3
NM RPS Active	9aa7ddf2-4ffc	W7561	EPENMAGG1S NM093S	EPENMAGG1S NM093S	Solar	12/1/2024	12/1/2024	12/31/2024	NM	N/A	3	7561-NM-12-2024-B1F68DD2-1 to 3
NM RPS Active	9aa7ddf2-4ffc	W7671	EPENMAGG1S NM094S	EPENMAGG1S NM094S	Solar	12/1/2024	12/1/2024	12/31/2024	NM	N/A	1	7671-NM-12-2024-ED9400AD-1 to 1
NM RPS Active	9aa7ddf2-4ffc	W7672	EPENMAGG1S NM095S	EPENMAGG1S NM095S	Solar	12/1/2024	12/1/2024	12/31/2024	NM	N/A	3	7672-NM-12-2024-FB427A9E-1 to 3
NM RPS Active	9aa7ddf2-4ffc	W7673	EPENMAGG1S NM096S	EPENMAGG1S NM096S	Solar	12/1/2024	12/1/2024	12/31/2024	NM	N/A	2	7673-NM-12-2024-CE3D896F-1 to 2
NM RPS Active	9aa7ddf2-4ffc	W7674	EPENMAGG1S NM097S	EPENMAGG1S NM097S	Solar	12/1/2024	12/1/2024	12/31/2024	NM	N/A	2	7674-NM-12-2024-9231DB6E-1 to 2
NM RPS Active	9aa7ddf2-4ffc	W7699	EPENMAGG1S NM098S	EPENMAGG1S NM098S	Solar	12/1/2024	12/1/2024	12/31/2024	NM	N/A	1	7699-NM-12-2024-7EAE298B-1 to 1
NM RPS Active	9aa7ddf2-4ffc	W7700	EPENMAGG1S NM099S	EPENMAGG1S NM099S	Solar	12/1/2024	12/1/2024	12/31/2024	NM	N/A	3	7700-NM-12-2024-C322FD5C-1 to 3
NM RPS Active	9aa7ddf2-4ffc	W8123	EPENMAGG1S NM100S	EPENMAGG1S NM100S	Solar	12/1/2024	12/1/2024	12/31/2024	NM	N/A	3	8123-NM-12-2024-959FDECA-1 to 3
NM RPS Active	9aa7ddf2-4ffc	W8124	EPENMAGG1S NM101S	EPENMAGG1S NM101S	Solar	12/1/2024	12/1/2024	12/31/2024	NM	N/A	5	8124-NM-12-2024-4D722D42-1 to 5
NM RPS Active	9aa7ddf2-4ffc	W8197	EPENMAGG1S NM102S	EPENMAGG1S NM102S	Solar	12/1/2024	12/1/2024	12/31/2024	NM	N/A	1	8197-NM-12-2024-5AC7E021-1 to 1
NM RPS Active	9aa7ddf2-4ffc	W8198	EPENMAGG1S NM103S	EPENMAGG1S NM103S	Solar	12/1/2024	12/1/2024	12/31/2024	NM	N/A	3	8198-NM-12-2024-CB091A54-1 to 3
NM RPS Active	9aa7ddf2-4ffc	W8794	EPENMAGG1S NM104S	EPENMAGG1S NM104S	Solar	12/1/2024	12/1/2024	12/31/2024	NM	N/A	5	8794-NM-12-2024-532114A3-1 to 5
NM RPS Active	9aa7ddf2-4ffc	W8835	EPENMAGG1S NM105S	EPENMAGG1S NM105S	Solar	12/1/2024	12/1/2024	12/31/2024	NM	N/A	3	8835-NM-12-2024-9F6A347D-1 to 3
NM RPS Active	9aa7ddf2-4ffc	W8836	EPENMAGG1S NM106S	EPENMAGG1S NM106S	Solar	12/1/2024	12/1/2024	12/31/2024	NM	N/A	1	8836-NM-12-2024-777C89C7-1 to 1

Account	Account ID	WREGIS GU ID	Unit Name	Facility Name	Fuel Type	Vintage	Generation Start Date	Generation End Date	Generator Location	Eligility	Quantity (RECs)	Serial Numbers
NM RPS Active	9aa7ddf2-4ffc	W9324	EPENMAGG1S NM107S	EPENMAGG1S NM107S	Solar	12/1/2024	12/1/2024	12/31/2024	NM	N/A	3	9324-NM-12-2024-CB8A799A-1 to 3
NM RPS Active	9aa7ddf2-4ffc	W9325	EPENMAGG1S NM108S	EPENMAGG1S NM108S	Solar	12/1/2024	12/1/2024	12/31/2024	NM	N/A	3	9325-NM-12-2024-876D1F68-1 to 3
NM RPS Active	9aa7ddf2-4ffc	W9344	EPENMAGG1S NM109S	EPENMAGG1S NM109S	Solar	12/1/2024	12/1/2024	12/31/2024	NM	N/A	3	9344-NM-12-2024-46142688-1 to 3
NM RPS Active	9aa7ddf2-4ffc	W9345	EPENMAGG1S NM110S	EPENMAGG1S NM110S	Solar	12/1/2024	12/1/2024	12/31/2024	NM	N/A	3	9345-NM-12-2024-B235320E-1 to 3
NM RPS Active	9aa7ddf2-4ffc	W9602	EPENMAGG1S NM111S	EPENMAGG1S NM111S	Solar	12/1/2024	12/1/2024	12/31/2024	NM	N/A	4	9602-NM-12-2024-BF212C11-1 to 4
NM RPS Active	9aa7ddf2-4ffc	W9603	EPENMAGG1S NM112S	EPENMAGG1S NM112S	Solar	12/1/2024	12/1/2024	12/31/2024	NM	N/A	3	9603-NM-12-2024-14320A74-1 to 3
NM RPS Active	9aa7ddf2-4ffc	W10025	EPENMAGG1S NM113S	EPENMAGG1S NM113S	Solar	12/1/2024	12/1/2024	12/31/2024	NM	N/A	4	10025-NM-12-2024-44F36E3F-1 to 4
NM RPS Active	9aa7ddf2-4ffc	W10026	EPENMAGG1S NM114S	EPENMAGG1S NM114S	Solar	12/1/2024	12/1/2024	12/31/2024	NM	N/A	1	10026-NM-12-2024-56561C0E-1 to 1
NM RPS Active	9aa7ddf2-4ffc	W10027	EPENMAGG1S NM115S	EPENMAGG1S NM115S	Solar	12/1/2024	12/1/2024	12/31/2024	NM	N/A	2	10027-NM-12-2024-39625C2C-1 to 2
NM RPS Active	9aa7ddf2-4ffc	W10105	EPENMAGG1S NM116S	EPENMAGG1S NM116S	Solar	12/1/2024	12/1/2024	12/31/2024	NM	N/A	3	10105-NM-12-2024-045F4E19-1 to 3
NM RPS Active	9aa7ddf2-4ffc	W10106	EPENMAGG1S NM117S	EPENMAGG1S NM117S	Solar	12/1/2024	12/1/2024	12/31/2024	NM	N/A	3	10106-NM-12-2024-B5C77E17-1 to 3
NM RPS Active	9aa7ddf2-4ffc	W10107	EPENMAGG1S NM118S	EPENMAGG1S NM118S	Solar	12/1/2024	12/1/2024	12/31/2024	NM	N/A	2	10107-NM-12-2024-DB56621B-1 to 2
NM RPS Active	9aa7ddf2-4ffc	W10167	EPENMAGG1S NM119S	EPENMAGG1S NM119S	Solar	12/1/2024	12/1/2024	12/31/2024	NM	N/A	2	10167-NM-12-2024-1470A6A2-1 to 2
NM RPS Active	9aa7ddf2-4ffc	W10460	EPENMAGG1S NM121S	EPENMAGG1S NM121S	Solar	12/1/2024	12/1/2024	12/31/2024	NM	N/A	3	10460-NM-12-2024-1E48F86A-1 to 3
NM RPS Active	9aa7ddf2-4ffc	W10461	EPENMAGG1S NM122S	EPENMAGG1S NM122S	Solar	12/1/2024	12/1/2024	12/31/2024	NM	N/A	4	10461-NM-12-2024-E9230446-1 to 4
NM RPS Active	9aa7ddf2-4ffc	W10695	EPENMAGG1S NM124S	EPENMAGG1S NM124S	Solar	12/1/2024	12/1/2024	12/31/2024	NM	N/A	3	10695-NM-12-2024-C63F5AEE-1 to 3
NM RPS Active	9aa7ddf2-4ffc	W10800	EPENMAGG1S NM125S	EPENMAGG1S NM125S	Solar	12/1/2024	12/1/2024	12/31/2024	NM	N/A	2	10800-NM-12-2024-3ADF24EF-1 to 2
NM RPS Active	9aa7ddf2-4ffc	W10820	EPENMAGG1S NM126S	EPENMAGG1S NM126S	Solar	12/1/2024	12/1/2024	12/31/2024	NM	N/A	2	10820-NM-12-2024-58519D42-1 to 2
NM RPS Active	9aa7ddf2-4ffc	W10821	EPENMAGG1S NM127S	EPENMAGG1S NM127S	Solar	12/1/2024	12/1/2024	12/31/2024	NM	N/A	3	10821-NM-12-2024-2B6F751B-1 to 3
NM RPS Active	9aa7ddf2-4ffc	W10867	EPENMAGG1S NM128S	EPENMAGG1S NM128S	Solar	12/1/2024	12/1/2024	12/31/2024	NM	N/A	2	10867-NM-12-2024-CE055F4E-1 to 2
NM RPS Active	9aa7ddf2-4ffc	W10868	EPENMAGG1S NM129S	EPENMAGG1S NM129S	Solar	12/1/2024	12/1/2024	12/31/2024	NM	N/A	2	10868-NM-12-2024-A36F9124-1 to 2
NM RPS Active	9aa7ddf2-4ffc	W10925	EPENMAGG1S NM131S	EPENMAGG1S NM131S	Solar	12/1/2024	12/1/2024	12/31/2024	NM	N/A	2	10925-NM-12-2024-9D85C3AD-1 to 2
NM RPS Active	9aa7ddf2-4ffc	W10926	EPENMAGG1S NM132S	EPENMAGG1S NM132S	Solar	12/1/2024	12/1/2024	12/31/2024	NM	N/A	2	10926-NM-12-2024-B1934C2E-1 to 2
NM RPS Active	9aa7ddf2-4ffc	W11361	EPENMAGG1S NM133S	EPENMAGG1S NM133S	Solar	12/1/2024	12/1/2024	12/31/2024	NM	N/A	3	11361-NM-12-2024-4402137A-1 to 3
NM RPS Active	9aa7ddf2-4ffc	W11363	EPENMAGG1S NM135S	EPENMAGG1S NM135S	Solar	12/1/2024	12/1/2024	12/31/2024	NM	N/A	3	11363-NM-12-2024-D3F3549B-1 to 3
NM RPS Active	9aa7ddf2-4ffc	W11374	EPENMAGG1S NM136S	EPENMAGG1S NM136S	Solar	12/1/2024	12/1/2024	12/31/2024	NM	N/A	2	11374-NM-12-2024-3BCA0355-1 to 2
NM RPS Active	9aa7ddf2-4ffc	W11375	EPENMAGG1S NM137S	EPENMAGG1S NM137S	Solar	12/1/2024	12/1/2024	12/31/2024	NM	N/A	4	11375-NM-12-2024-A8EF1A24-1 to 4
NM RPS Active	9aa7ddf2-4ffc	W11377	EPENMAGG1S NM138S	EPENMAGG1S NM138S	Solar	12/1/2024	12/1/2024	12/31/2024	NM	N/A	4	11377-NM-12-2024-F4AB10DF-1 to 4
NM RPS Active	9aa7ddf2-4ffc	W11378	EPENMAGG1S NM139S	EPENMAGG1S NM139S	Solar	12/1/2024	12/1/2024	12/31/2024	NM	N/A	4	11378-NM-12-2024-2E56BD1B-1 to 4
NM RPS Active	9aa7ddf2-4ffc	W11379	EPENMAGG1S NM140S	EPENMAGG1S NM140S	Solar	12/1/2024	12/1/2024	12/31/2024	NM	N/A	4	11379-NM-12-2024-F0039A42-1 to 4
NM RPS Active	9aa7ddf2-4ffc	W11381	EPENMAGG1S NM141S	EPENMAGG1S NM141S	Solar	12/1/2024	12/1/2024	12/31/2024	NM	N/A	4	11381-NM-12-2024-19F89891-1 to 4
NM RPS Active	9aa7ddf2-4ffc	W11382	EPENMAGG1S NM142S	EPENMAGG1S NM142S	Solar	12/1/2024	12/1/2024	12/31/2024	NM	N/A	5	11382-NM-12-2024-3FD82D4B-1 to 5
NM RPS Active	9aa7ddf2-4ffc	W11383	EPENMAGG1S NM143S	EPENMAGG1S NM143S	Solar	12/1/2024	12/1/2024	12/31/2024	NM	N/A	4	11383-NM-12-2024-E7891AA2-1 to 4
NM RPS Active	9aa7ddf2-4ffc	W11384	EPENMAGG1S NM144S	EPENMAGG1S NM144S	Solar	12/1/2024	12/1/2024	12/31/2024	NM	N/A	5	11384-NM-12-2024-11F22A25-1 to 5
NM RPS Active	9aa7ddf2-4ffc	W11968	EPENMAGG1S NM145S	EPENMAGG1S NM145S	Solar	12/1/2024	12/1/2024	12/31/2024	NM	N/A	3	11968-NM-12-2024-709D36FF-1 to 3
NM RPS Active	9aa7ddf2-4ffc	W11969	EPENMAGG1S NM146S	EPENMAGG1S NM146S	Solar	12/1/2024	12/1/2024	12/31/2024	NM	N/A	2	11969-NM-12-2024-9561675C-1 to 2
NM RPS Active	9aa7ddf2-4ffc	W11970	EPENMAGG1S NM147S	EPENMAGG1S NM147S	Solar	12/1/2024	12/1/2024	12/31/2024	NM	N/A	5	11970-NM-12-2024-7604367F-1 to 5
NM RPS Active	9aa7ddf2-4ffc	W11972	EPENMAGG1S NM149S	EPENMAGG1S NM149S	Solar	12/1/2024	12/1/2024	12/31/2024	NM	N/A	4	11972-NM-12-2024-51CB4463-1 to 4
NM RPS Active	9aa7ddf2-4ffc	W11973	EPENMAGG1S NM150S	EPENMAGG1S NM150S	Solar	12/1/2024	12/1/2024	12/31/2024	NM	N/A	5	11973-NM-12-2024-D1659BB0-1 to 5
NM RPS Active	9aa7ddf2-4ffc	W11974	EPENMAGG1S NM151S	EPENMAGG1S NM151S	Solar	12/1/2024	12/1/2024	12/31/2024	NM	N/A	3	11974-NM-12-2024-24A1950F-1 to 3
NM RPS Active	9aa7ddf2-4ffc	W11975	EPENMAGG1S NM152S	EPENMAGG1S NM152S	Solar	12/1/2024	12/1/2024	12/31/2024	NM	N/A	4	11975-NM-12-2024-748AC241-1 to 4
NM RPS Active	9aa7ddf2-4ffc	W11976	EPENMAGG1S NM153S	EPENMAGG1S NM153S	Solar	12/1/2024	12/1/2024	12/31/2024	NM	N/A	4	11976-NM-12-2024-0596C057-1 to 4
NM RPS Active	9aa7ddf2-4ffc	W11977	EPENMAGG1S NM154S	EPENMAGG1S NM154S	Solar	12/1/2024	12/1/2024	12/31/2024	NM	N/A	3	11977-NM-12-2024-42D0ED4B-1 to 3
NM RPS Active	9aa7ddf2-4ffc	W11980	EPENMAGG1S NM156S	EPENMAGG1S NM156S	Solar	12/1/2024	12/1/2024	12/31/2024	NM	N/A	4	11980-NM-12-2024-649D2B8C-1 to 4
NM RPS Active	9aa7ddf2-4ffc	W11981	EPENMAGG1S NM157S	EPENMAGG1S NM157S	Solar	12/1/2024	12/1/2024	12/31/2024	NM	N/A	3	11981-NM-12-2024-5666EBF7-1 to 3
NM RPS Active	9aa7ddf2-4ffc	W11982	EPENMAGG1S NM158S	EPENMAGG1S NM158S	Solar	12/1/2024	12/1/2024	12/31/2024	NM	N/A	3	11982-NM-12-2024-6C61BC66-1 to 3
NM RPS Active	9aa7ddf2-4ffc	W11984	EPENMAGG1S NM159S	EPENMAGG1S NM159S	Solar	12/1/2024	12/1/2024	12/31/2024	NM	N/A	1	11984-NM-12-2024-309A038E-1 to 1
NM RPS Active	9aa7ddf2-4ffc	W12098	EPENMAGG1S NM160S	EPENMAGG1S NM160S	Solar	12/1/2024	12/1/2024	12/31/2024	NM	N/A	5	12098-NM-12-2024-B8325141-1 to 5
NM RPS Active	9aa7ddf2-4ffc	W12099	EPENMAGG1S NM161S	EPENMAGG1S NM161S	Solar	12/1/2024	12/1/2024	12/31/2024	NM	N/A	5	12099-NM-12-2024-FF421E9C-1 to 5
NM RPS Active	9aa7ddf2-4ffc	W12100	EPENMAGG1S NM162S	EPENMAGG1S NM162S	Solar	12/1/2024	12/1/2024	12/31/2024	NM	N/A	5	12100-NM-12-2024-C8EF6C53-1 to 5
NM RPS Active	9aa7ddf2-4ffc	W12101	EPENMAGG1S NM163S	EPENMAGG1S NM163S	Solar	12/1/2024	12/1/2024	12/31/2024	NM	N/A	3	12101-NM-12-2024-2781754A-1 to 3
NM RPS Active	9aa7ddf2-4ffc	W12188	EPENMAGG1S NM164S	EPENMAGG1S NM164S	Solar	12/1/2024	12/1/2024	12/31/2024	NM	N/A	4	12188-NM-12-2024-5EE6CEE8-1 to 4
NM RPS Active	9aa7ddf2-4ffc	W12257	EPENMAGG1S NM166S	EPENMAGG1S NM166S	Solar	12/1/2024	12/1/2024	12/31/2024	NM	N/A	1	12257-NM-12-2024-66D0B69C-1 to 1
NM RPS Active	9aa7ddf2-4ffc	W12260	EPENMAGG1S NM168S	EPENMAGG1S NM168S	Solar	12/1/2024	12/1/2024	12/31/2024	NM	N/A	3	12260-NM-12-2024-19DAE4A8-1 to 3
NM RPS Active	9aa7ddf2-4ffc	W12643	EPENMAGG1S NM170S	EPENMAGG1S NM170S	Solar	12/1/2024	12/1/2024	12/31/2024	NM	N/A	4	12643-NM-12-2024-032658B4-1 to 4
NM RPS Active	9aa7ddf2-4ffc	W12646	EPENMAGG1S NM173S	EPENMAGG1S NM173S	Solar	12/1/2024	12/1/2024	12/31/2024	NM	N/A	4	12646-NM-12-2024-C15019FF-1 to 4
NM RPS Active	9aa7ddf2-4ffc	W12651	EPENMAGG1S NM176S	EPENMAGG1S NM176S	Solar	12/1/2024	12/1/2024	12/31/2024	NM	N/A	5	12651-NM-12-2024-D6ADB415-1 to 5
NM RPS Active	9aa7ddf2-4ffc	W12702	EPENMAGG1S NM177S	EPENMAGG1S NM177S	Solar	12/1/2024	12/1/2024	12/31/2024	NM	N/A	6	12702-NM-12-2024-AAF2C0BD-1 to 6

Account	Account ID	WREGIS GU ID	Unit Name	Facility Name	Fuel Type	Vintage	Generation Start Date	Generation End Date	Generator Location	Eligility	Quantity (RECs)	Serial Numbers
NM RPS Active	9aa7ddf2-4ffc	W12703	EPENMAGG1S NM178S	EPENMAGG1S NM178S	Solar	12/1/2024	12/1/2024	12/31/2024	NM	N/A	5	12703-NM-12-2024-9057CAF9-1 to 5
NM RPS Active	9aa7ddf2-4ffc	W12704	EPENMAGG1S NM179S	EPENMAGG1S NM179S	Solar	12/1/2024	12/1/2024	12/31/2024	NM	N/A	3	12704-NM-12-2024-8B901ACC-1 to 3
NM RPS Active	9aa7ddf2-4ffc	W12744	EPENMAGG1S NM180S	EPENMAGG1S NM180S	Solar	12/1/2024	12/1/2024	12/31/2024	NM	N/A	4	12744-NM-12-2024-A229E939-1 to 4
NM RPS Active	9aa7ddf2-4ffc	W12745	EPENMAGG1S NM181S	EPENMAGG1S NM181S	Solar	12/1/2024	12/1/2024	12/31/2024	NM	N/A	3	12745-NM-12-2024-113896C3-1 to 3
NM RPS Active	9aa7ddf2-4ffc	W13207	EPENMAGG1S NM182S	EPENMAGG1S NM182S	Solar	12/1/2024	12/1/2024	12/31/2024	NM	N/A	5	13207-NM-12-2024-16ADC75B-1 to 5
NM RPS Active	9aa7ddf2-4ffc	W13208	EPENMAGG1S NM183S	EPENMAGG1S NM183S	Solar	12/1/2024	12/1/2024	12/31/2024	NM	N/A	5	13208-NM-12-2024-69CCE4C1-1 to 5
NM RPS Active	9aa7ddf2-4ffc	W13211	EPENMAGG1S NM185S	EPENMAGG1S NM185S	Solar	12/1/2024	12/1/2024	12/31/2024	NM	N/A	4	13211-NM-12-2024-5752DE1C-1 to 4
NM RPS Active	9aa7ddf2-4ffc	W13615	EPENMAGG1S NM186S	EPENMAGG1S NM186S	Solar	12/1/2024	12/1/2024	12/31/2024	NM	N/A	5	13615-NM-12-2024-19A8B241-1 to 5
NM RPS Active	9aa7ddf2-4ffc	W13616	EPENMAGG1S NM187S	EPENMAGG1S NM187S	Solar	12/1/2024	12/1/2024	12/31/2024	NM	N/A	4	13616-NM-12-2024-FD10AFF0-1 to 4
NM RPS Active	9aa7ddf2-4ffc	W13701	EPENMAGG1S NM188S	EPENMAGG1S NM188S	Solar	12/1/2024	12/1/2024	12/31/2024	NM	N/A	5	13701-NM-12-2024-334A53B3-1 to 5
NM RPS Active	9aa7ddf2-4ffc	W13702	EPENMAGG1S NM189S	EPENMAGG1S NM189S	Solar	12/1/2024	12/1/2024	12/31/2024	NM	N/A	4	13702-NM-12-2024-BACD277A-1 to 4
NM RPS Active	9aa7ddf2-4ffc	W13799	EPENMAGG1S NM190S	EPENMAGG1S NM190S	Solar	12/1/2024	12/1/2024	12/31/2024	NM	N/A	5	13799-NM-12-2024-ACF000F7-1 to 5
NM RPS Active	9aa7ddf2-4ffc	W13801	EPENMAGG1S NM191S	EPENMAGG1S NM191S	Solar	12/1/2024	12/1/2024	12/31/2024	NM	N/A	4	13801-NM-12-2024-928245C2-1 to 4
NM RPS Active	9aa7ddf2-4ffc	W13802	EPENMAGG1S NM192S	EPENMAGG1S NM192S	Solar	12/1/2024	12/1/2024	12/31/2024	NM	N/A	5	13802-NM-12-2024-DC341EEC-1 to 5
NM RPS Active	9aa7ddf2-4ffc	W13803	EPENMAGG1S NM193S	EPENMAGG1S NM193S	Solar	12/1/2024	12/1/2024	12/31/2024	NM	N/A	5	13803-NM-12-2024-6EB316B8-1 to 5
NM RPS Active	9aa7ddf2-4ffc	W13804	EPENMAGG1S NM194S	EPENMAGG1S NM194S	Solar	12/1/2024	12/1/2024	12/31/2024	NM	N/A	4	13804-NM-12-2024-1BBBC02C-1 to 4
NM RPS Active	9aa7ddf2-4ffc	W13897	EPENMAGG1S NM195S	EPENMAGG1S NM195S	Solar	12/1/2024	12/1/2024	12/31/2024	NM	N/A	4	13897-NM-12-2024-B335ECDF-1 to 4
NM RPS Active	9aa7ddf2-4ffc	W13898	EPENMAGG1S NM196S	EPENMAGG1S NM196S	Solar	12/1/2024	12/1/2024	12/31/2024	NM	N/A	3	13898-NM-12-2024-C40773D6-1 to 3
NM RPS Active	9aa7ddf2-4ffc	W13972	EPENMAGG1S NM197S	EPENMAGG1S NM197S	Solar	12/1/2024	12/1/2024	12/31/2024	NM	N/A	5	13972-NM-12-2024-8820A1DD-1 to 5
NM RPS Active	9aa7ddf2-4ffc	W13973	EPENMAGG1S NM198S	EPENMAGG1S NM198S	Solar	12/1/2024	12/1/2024	12/31/2024	NM	N/A	4	13973-NM-12-2024-286D6E7F-1 to 4
NM RPS Active	9aa7ddf2-4ffc	W13975	EPENMAGG1S NM199S	EPENMAGG1S NM199S	Solar	12/1/2024	12/1/2024	12/31/2024	NM	N/A	2	13975-NM-12-2024-410B7342-1 to 2
NM RPS Active	9aa7ddf2-4ffc	W14044	EPENMAGG1S NM200S	EPENMAGG1S NM200S	Solar	12/1/2024	12/1/2024	12/31/2024	NM	N/A	3	14044-NM-12-2024-89D9865D-1 to 3
NM RPS Active	9aa7ddf2-4ffc	W14045	EPENMAGG1S NM201S	EPENMAGG1S NM201S	Solar	12/1/2024	12/1/2024	12/31/2024	NM	SMUD	4	14045-NM-12-2024-DA2A219C-1 to 4
NM RPS Active	9aa7ddf2-4ffc	W14046	EPENMAGG1S NM202S	EPENMAGG1S NM202S	Solar	12/1/2024	12/1/2024	12/31/2024	NM	N/A	2	14046-NM-12-2024-2F264C1B-1 to 2
NM RPS Active	9aa7ddf2-4ffc	W14049	EPENMAGG1S NM204S	EPENMAGG1S NM204S	Solar	12/1/2024	12/1/2024	12/31/2024	NM	SMUD	5	14049-NM-12-2024-6B92C53A-1 to 5
NM RPS Active	9aa7ddf2-4ffc	W14225	N/A	EPENMAGG1S NM205S	Solar	12/1/2024	12/1/2024	12/31/2024	NM	N/A	4	14225-NM-12-2024-B686DC12-1 to 4
NM RPS Active	9aa7ddf2-4ffc	W14230	N/A	EPENMAGG1S NM206S	Solar	12/1/2024	12/1/2024	12/31/2024	NM	N/A	3	14230-NM-12-2024-415A6AFC-1 to 3
NM RPS Active	9aa7ddf2-4ffc	W14334	N/A	EPENMAGG1S NM207S	Solar	12/1/2024	12/1/2024	12/31/2024	NM	N/A	5	14334-NM-12-2024-FF936047-1 to 5
NM RPS Active	9aa7ddf2-4ffc	W15470	N/A	EPENMAGG1S NM208S	Solar	12/1/2024	12/1/2024	12/31/2024	NM	N/A	6	15470-NM-12-2024-31C7136C-1 to 6
NM RPS Active	9aa7ddf2-4ffc	W15471	N/A	EPENMAGG1S NM209S	Solar	12/1/2024	12/1/2024	12/31/2024	NM	N/A	5	15471-NM-12-2024-57E1CC5A-1 to 5
NM RPS Active	9aa7ddf2-4ffc	W15472	N/A	EPENMAGG1S NM210S	Solar	12/1/2024	12/1/2024	12/31/2024	NM	N/A	4	15472-NM-12-2024-EDF30E55-1 to 4
NM RPS Active	9aa7ddf2-4ffc	W15473	N/A	EPENMAGG1S NM211S	Solar	12/1/2024	12/1/2024	12/31/2024	NM	N/A	3	15473-NM-12-2024-9A8506FD-1 to 3
NM RPS Active	9aa7ddf2-4ffc	W15474	N/A	EPENMAGG1S NM212S	Solar	12/1/2024	12/1/2024	12/31/2024	NM	N/A	4	15474-NM-12-2024-407859E7-1 to 4
NM RPS Active	9aa7ddf2-4ffc	W15475	N/A	EPENMAGG1S NM213S	Solar	12/1/2024	12/1/2024	12/31/2024	NM	N/A	7	15475-NM-12-2024-B8FF5056-1 to 7
NM RPS Active	9aa7ddf2-4ffc	W15517	N/A	EPENMAGG1S NM214S	Solar	12/1/2024	12/1/2024	12/31/2024	NM	N/A	5	15517-NM-12-2024-FAF05420-1 to 5
NM RPS Active	9aa7ddf2-4ffc	W15518	N/A	EPENMAGG1S NM215S	Solar	12/1/2024	12/1/2024	12/31/2024	NM	N/A	4	15518-NM-12-2024-8BB75948-1 to 4
NM RPS Active	9aa7ddf2-4ffc	W15519	N/A	EPENMAGG1S NM216S	Solar	12/1/2024	12/1/2024	12/31/2024	NM	N/A	6	15519-NM-12-2024-5B10315F-1 to 6
NM RPS Active	9aa7ddf2-4ffc	W15520	N/A	EPENMAGG1S NM217S	Solar	12/1/2024	12/1/2024	12/31/2024	NM	N/A	3	15520-NM-12-2024-D4C8658D-1 to 3
NM RPS Active	9aa7ddf2-4ffc	W15521	N/A	EPENMAGG1S NM218S	Solar	12/1/2024	12/1/2024	12/31/2024	NM	N/A	2	15521-NM-12-2024-BD502EEF-1 to 2
NM RPS Active	9aa7ddf2-4ffc	W15533	N/A	EPENMAGG1S NM219S	Solar	12/1/2024	12/1/2024	12/31/2024	NM	N/A	4	15533-NM-12-2024-EB889DDF-1 to 4
NM RPS Active	9aa7ddf2-4ffc	W15702	N/A	EPENMAGG1S NM220S	Solar	12/1/2024	12/1/2024	12/31/2024	NM	N/A	4	15702-NM-12-2024-2C6D17B3-1 to 4
NM RPS Active	9aa7ddf2-4ffc	W15703	N/A	EPENMAGG1S NM221S	Solar	12/1/2024	12/1/2024	12/31/2024	NM	N/A	6	15703-NM-12-2024-AE2D17F6-1 to 6
NM RPS Active	9aa7ddf2-4ffc	W15704	N/A	EPENMAGG1S NM222S	Solar	12/1/2024	12/1/2024	12/31/2024	NM	N/A	7	15704-NM-12-2024-1A5DCD04-1 to 7
NM RPS Active	9aa7ddf2-4ffc	W15705	N/A	EPENMAGG1S NM223S	Solar	12/1/2024	12/1/2024	12/31/2024	NM	N/A	6	15705-NM-12-2024-105B076C-1 to 6
NM RPS Active	9aa7ddf2-4ffc	W16065	N/A	EPENMAGG1S NM224S	Solar	12/1/2024	12/1/2024	12/31/2024	NM	N/A	3	16065-NM-12-2024-3A1466D1-1 to 3
NM RPS Active	9aa7ddf2-4ffc	W16066	N/A	EPENMAGG1S NM225S	Solar	12/1/2024	12/1/2024	12/31/2024	NM	N/A	4	16066-NM-12-2024-41AD1387-1 to 4
NM RPS Active	9aa7ddf2-4ffc	W16067	N/A	EPENMAGG1S NM226S	Solar	12/1/2024	12/1/2024	12/31/2024	NM	N/A	3	16067-NM-12-2024-0730E016-1 to 3
NM RPS Active	9aa7ddf2-4ffc	W16490	N/A	EPENMAGG1S NM227S	Solar	12/1/2024	12/1/2024	12/31/2024	NM	N/A	5	16490-NM-12-2024-AB760730-1 to 5
NM RPS Active	9aa7ddf2-4ffc	W16492	N/A	EPENMAGG1S NM229S	Solar	12/1/2024	12/1/2024	12/31/2024	NM	N/A	6	16492-NM-12-2024-43941639-1 to 6
NM RPS Active	9aa7ddf2-4ffc	W16493	N/A	EPENMAGG1S NM230S	Solar	12/1/2024	12/1/2024	12/31/2024	NM	N/A	4	16493-NM-12-2024-07AF43FA-1 to 4
NM RPS Active	9aa7ddf2-4ffc	W16494	N/A	EPENMAGG1S NM231S	Solar	12/1/2024	12/1/2024	12/31/2024	NM	N/A	3	16494-NM-12-2024-2AE299CD-1 to 3
NM RPS Active	9aa7ddf2-4ffc	W17425	N/A	EPENMAGG1S NM232S	Solar	12/1/2024	12/1/2024	12/31/2024	NM	N/A	3	17425-NM-12-2024-6A39D92A-1 to 3
NM RPS Active	9aa7ddf2-4ffc	W17426	N/A	EPENMAGG1S NM233S	Solar	12/1/2024	12/1/2024	12/31/2024	NM	N/A	4	17426-NM-12-2024-4549AAC5-1 to 4
NM RPS Active	9aa7ddf2-4ffc	W17427	N/A	EPENMAGG1S NM235S	Solar	12/1/2024	12/1/2024	12/31/2024	NM	N/A	5	17427-NM-12-2024-1B9085B5-1 to 5
NM RPS Active	9aa7ddf2-4ffc	W17428	N/A	EPENMAGG1S NM236S	Solar	12/1/2024	12/1/2024	12/31/2024	NM	N/A	6	17428-NM-12-2024-E1E5D02E-1 to 6
NM RPS Active	9aa7ddf2-4ffc	W17429	N/A	EPENMAGG1S NM237S	Solar	12/1/2024	12/1/2024	12/31/2024	NM	N/A	5	17429-NM-12-2024-97C6ED93-1 to 5
NM RPS Active	9aa7ddf2-4ffc	W17430	N/A	EPENMAGG1S NM238S	Solar	12/1/2024	12/1/2024	12/31/2024	NM	N/A	4	17430-NM-12-2024-AB03763A-1 to 4
NM RPS Active	9aa7ddf2-4ffc	W17431	N/A	EPENMAGG1S NM239S	Solar	12/1/2024	12/1/2024	12/31/2024	NM	N/A	3	17431-NM-12-2024-4F67C6EE-1 to 3

Account	Account ID	WREGIS GU ID	Unit Name	Facility Name	Fuel Type	Vintage	Generation Start Date	Generation End Date	Generator Location	Eligility	Quantity (RECs)	Serial Numbers
NM RPS Active	9aa7ddf2-4ffc	W17432	N/A	EPENMAGG1S NM240S	Solar	12/1/2024	12/1/2024	12/31/2024	NM	N/A	5	17432-NM-12-2024-1122ECCD-1 to 5
NM RPS Active	9aa7ddf2-4ffc	W17433	N/A	EPENMAGG1S NM241S	Solar	12/1/2024	12/1/2024	12/31/2024	NM	N/A	4	17433-NM-12-2024-541B9701-1 to 4
NM RPS Active	9aa7ddf2-4ffc	W17434	N/A	EPENMAGG1S NM242S	Solar	12/1/2024	12/1/2024	12/31/2024	NM	N/A	4	17434-NM-12-2024-1A995499-1 to 4
NM RPS Active	9aa7ddf2-4ffc	W17435	N/A	EPENMAGG1S NM243S	Solar	12/1/2024	12/1/2024	12/31/2024	NM	N/A	4	17435-NM-12-2024-9D1556C4-1 to 4
NM RPS Active	9aa7ddf2-4ffc	W17436	N/A	EPENMAGG1S NM244S	Solar	12/1/2024	12/1/2024	12/31/2024	NM	N/A	7	17436-NM-12-2024-35AA221D-1 to 7
NM RPS Active	9aa7ddf2-4ffc	W17546	N/A	EPENMAGG1S NM245S	Solar	12/1/2024	12/1/2024	12/31/2024	NM	N/A	5	17546-NM-12-2024-D63612C1-1 to 5
NM RPS Active	9aa7ddf2-4ffc	W17824	N/A	EPENMAGG1S NM246S	Solar	12/1/2024	12/1/2024	12/31/2024	NM	N/A	4	17824-NM-12-2024-0791EB79-1 to 4
NM RPS Active	9aa7ddf2-4ffc	W17825	N/A	EPENMAGG1S NM247S	Solar	12/1/2024	12/1/2024	12/31/2024	NM	N/A	5	17825-NM-12-2024-47DBB42D-1 to 5
NM RPS Active	9aa7ddf2-4ffc	W18165	N/A	EPENMAGG1S NM248S	Solar	12/1/2024	12/1/2024	12/31/2024	NM	N/A	7	18165-NM-12-2024-A778AE95-1 to 7
NM RPS Active	9aa7ddf2-4ffc	W18166	N/A	EPENMAGG1S NM249S	Solar	12/1/2024	12/1/2024	12/31/2024	NM	N/A	5	18166-NM-12-2024-835F8584-1 to 5
NM RPS Active	9aa7ddf2-4ffc	W18167	N/A	EPENMAGG1S NM250S	Solar	12/1/2024	12/1/2024	12/31/2024	NM	N/A	4	18167-NM-12-2024-E17A0F7A-1 to 4
NM RPS Active	9aa7ddf2-4ffc	W18279	N/A	EPENMAGG1S NM251S	Solar	12/1/2024	12/1/2024	12/31/2024	NM	N/A	5	18279-NM-12-2024-3436D32A-1 to 5
NM RPS Active	9aa7ddf2-4ffc	W18280	N/A	EPENMAGG1S NM252S	Solar	12/1/2024	12/1/2024	12/31/2024	NM	N/A	6	18280-NM-12-2024-D689431C-1 to 6
NM RPS Active	9aa7ddf2-4ffc	W18547	N/A	EPENMAGG1S NM253S	Solar	12/1/2024	12/1/2024	12/31/2024	NM	N/A	4	18547-NM-12-2024-367AC93F-1 to 4
NM RPS Active	9aa7ddf2-4ffc	W18548	N/A	EPENMAGG1S NM254S	Solar	12/1/2024	12/1/2024	12/31/2024	NM	N/A	3	18548-NM-12-2024-45C2B69F-1 to 3
NM RPS Active	9aa7ddf2-4ffc	W18750	N/A	EPENMAGG1S NM255S	Solar	12/1/2024	12/1/2024	12/31/2024	NM	N/A	3	18750-NM-12-2024-CBF5AC7E-1 to 3
NM RPS Active	9aa7ddf2-4ffc	W19059	N/A	EPENMAGG1S NM256S	Solar	12/1/2024	12/1/2024	12/31/2024	NM	N/A	4	19059-NM-12-2024-4E6153A7-1 to 4
NM RPS Active	9aa7ddf2-4ffc	W20226	N/A	EPENMAGG1S NM258S	Solar	12/1/2024	12/1/2024	12/31/2024	NM	N/A	5	20226-NM-12-2024-1213083F-1 to 5
NM RPS Active	9aa7ddf2-4ffc	W20227	N/A	EPENMAGG1S NM259S	Solar	12/1/2024	12/1/2024	12/31/2024	NM	N/A	4	20227-NM-12-2024-1E8DCD17-1 to 4
NM RPS Active	9aa7ddf2-4ffc	W20660	N/A	EPENMAGG1S NM260S	Solar	12/1/2024	12/1/2024	12/31/2024	NM	N/A	3	20660-NM-12-2024-2996C53A-1 to 3
NM RPS Active	9aa7ddf2-4ffc	W20661	N/A	EPENMAGG1S NM261S	Solar	12/1/2024	12/1/2024	12/31/2024	NM	N/A	5	20661-NM-12-2024-4129F30F-1 to 5
NM RPS Active	9aa7ddf2-4ffc	W21465	N/A	EPENMAGG1S NM263S	Solar	12/1/2024	12/1/2024	12/31/2024	NM	N/A	4	21465-NM-12-2024-78256662-1 to 4
NM RPS Active	9aa7ddf2-4ffc	W21659	N/A	EPENMAGG1S NM264S	Solar	12/1/2024	12/1/2024	12/31/2024	NM	N/A	2	21659-NM-12-2024-496D4F92-1 to 2

ATTACHMENT 2

Monthly Solar Energy Purchase Documentation –
Hatch Solar Energy Center 1, LLC

Hatch Solar Energy Center 1 LLC

Source: Hatch Solar Energy Center Statements

2024	RECs Purchased kWh	Delivered Energy [1] kWh		Total $
January	538,894.6	531,453.0	$	63,242.91
February	646,779.9	640,153.0	$	76,178.21
March	834,440.6	827,814.7	$	98,509.94
April	1,043,931.7	1,038,039.8	$	123,526.74
May	1,132,989.5	1,127,698.9	$	134,196.17
June	961,900.1	956,707.3	$	113,848.17
July	982,567.6	977,214.9	$	116,288.57
August	891,195.1	885,410.7	$	105,363.88
September	856,881.6	850,856.8	$	101,251.96
October	794,811.9	787,819.9	$	93,750.56
November	711,809.5	704,347.0	$	83,817.29
December	664,992.6	657,006.0	$	78,183.71
Total	10,061,194.7	9,984,522.0	$	1,188,158.11

[1] Delivered energy equals gross production net of station power.

Hatch Solar Energy Center I, LLC

[redacted]
700 Universe Blvd
Juno Beach, FL 33408

BILL TO

El Paso Electric Company
Attn: Settlement Admin

SETTLEMENT DETAILS

Number:	2691
Date:	02-06-2024
Due Date:	03-06-2024
Grand Total:	$63,242.91 USD

Energy

Start Dt	End Dt	Description	Volume	UoM	Price	Price Type	Amount Due
01/01/2024	01/31/2024	PPA Energy Generation	531,452.98994	kWh	$0.119	FIXED	$63,242.91 USD
Subtotal							**$63,242.91 USD**

Current Balance:	$63,242.91 USD
Statement Grand Total:	$63,242.91 USD

Hatch Solar Energy Center I, LLC

[redacted]
700 Universe Blvd
Juno Beach, FL 33408

ACH PAYMENT INSTRUCTIONS

[redacted]

WIRE PAYMENT INSTRUCTIONS

[redacted]

FOR QUESTIONS CONTACT

Analyst:	Svetlana Vorobieva
Email:	NEER-Revenue-Team.SharedMailbox@nexteraenergy.com

RENEWABLE ENERGY CERTIFICATE

Period: For the month of January 2024

Source of REC: Renewable Energy Provider

Hatch Solar Energy Center I, LLC
7349 Highway 26
Hatch, NM 87937

Contact: Isa Li
Business Manager
700 Universe Blvd,
FEB/JB E3225
Juno Beach, FL 33408

Generator type:	Concentrating Solar Photovoltaic
Nameplate capacity (in MW):	5.04 MW
Date of generator start-up:	June 24, 2011
Fuel Source:	Solar
Revenue Meter manufacturer and identification / serial number:	ION 7650 / LJ-1105A306-02
Location of generator:	32° 37.527'N, 107° 15.586'W

Renewable Energy Purchaser:

Interconnection Utility: El Paso Electric Company

Control Area Operator: El Paso Electric Company

EPE Contact:
Evan Evans
P.O. Box 982
El Paso, TX 79960
(915) 543-5995
Fax (915) 521-4729

MONTHLY STATEMENT OF RECS

Renewable Energy delivery for the month of January 2024

Energy Delivered 538,894.60 kWh

SUPPLIER CERTIFICATION

I, Daniel Dorsano, herby certify that:

The energy produced, sold and delivered by Hatch Solar Energy Center I, LLC to El Paso Electric Company from these facilities is from a renewable energy resource, as defined by the New Mexico Renewable Energy Act, NMSA 1978, Section 62-16-1 et seq., and the NMPRC Rule 572, Renewable Energy For Electric Utilities, 17.9.572 NMAC;

Each kilowatt hour of electricity is generated using a solar fuel source; and

No other Renewable Energy Certificates associated with the renewable energy produced and delivered by Hatch Solar Energy Center I, LLC to El Paso Electric Company have been traded, sold, retired or otherwise transferred by Hatch Solar Energy Center I, LLC to any other person or entity.

Daniel M. Dorsano

Daniel Dorsano

Business Manager

DATE: 02/05/2024

Hatch Solar Energy Center I, LLC

[redacted]
700 Universe Blvd
Juno Beach, FL 33408

BILL TO

El Paso Electric Company
Attn: Settlement Admin

SETTLEMENT DETAILS

Number:	2978
Date:	03-06-2024
Due Date:	04-03-2024
Grand Total:	$76,178.21 USD

Energy

Start Dt	End Dt	Description	Volume	UoM	Price	Price Type	Amount Due
02/01/2024	02/29/2024	PPA Energy Generation	640,153.03492	kWh	$0.119	FIXED	$76,178.21 USD
Subtotal							**$76,178.21 USD**

Current Balance:	$76,178.21 USD
Statement Grand Total:	$76,178.21 USD

Hatch Solar Energy Center I, LLC

[redacted]
700 Universe Blvd
Juno Beach, FL 33408

ACH PAYMENT INSTRUCTIONS

[redacted]

WIRE PAYMENT INSTRUCTIONS

[redacted]

FOR QUESTIONS CONTACT

Analyst:	Svetlana Vorobieva
Email:	NEER-Revenue-Team.SharedMailbox@nexteraenergy.com

RENEWABLE ENERGY CERTIFICATE

Period: For the month of February 2024

Source of REC: Renewable Energy Provider

Hatch Solar Energy Center I, LLC
7349 Highway 26
Hatch, NM 87937

Contact: Isa Li
Business Manager
700 Universe Blvd,
FEB/JB E3225
Juno Beach, FL 33408

Generator type:	Concentrating Solar Photovoltaic
Nameplate capacity (in MW):	5.04 MW
Date of generator start-up:	June 24, 2011
Fuel Source:	Solar
Revenue Meter manufacturer and identification / serial number:	ION 7650 / LJ-1105A306-02
Location of generator:	32° 37.527'N, 107° 15.586'W

Renewable Energy Purchaser:

Interconnection Utility: El Paso Electric Company

Control Area Operator: El Paso Electric Company

EPE Contact:
Evan Evans
P.O. Box 982
El Paso, TX 79960
(915) 543-5995
Fax (915) 521-4729

MONTHLY STATEMENT OF RECS

Renewable Energy delivery for the month of February 2024

Energy Delivered 646,779.90 kWh

SUPPLIER CERTIFICATION

I, Daniel Dorsano, herby certify that:

The energy produced, sold and delivered by Hatch Solar Energy Center I, LLC to El Paso Electric Company from these facilities is from a renewable energy resource, as defined by the New Mexico Renewable Energy Act, NMSA 1978, Section 62-16-1 et seq., and the NMPRC Rule 572, Renewable Energy For Electric Utilities, 17.9.572 NMAC;

Each kilowatt hour of electricity is generated using a solar fuel source; and

No other Renewable Energy Certificates associated with the renewable energy produced and delivered by Hatch Solar Energy Center I, LLC to El Paso Electric Company have been traded, sold, retired or otherwise transferred by Hatch Solar Energy Center I, LLC to any other person or entity.

Daniel M. Dorsano

Daniel Dorsano

Business Manager

DATE: 03/06/2024

Hatch Solar Energy Center I, LLC

[redacted]
700 Universe Blvd
Juno Beach, FL 33408

2024 March

BILL TO

El Paso Electric Company
Attn: Settlement Admin

SETTLEMENT DETAILS

Number:	3230
Date:	04-04-2024
Due Date:	05-02-2024
Grand Total:	$98,509.94 USD

Energy

Start Dt	End Dt	Description	Volume	UoM	Price	Price Type	Amount Due
03/01/2024	03/31/2024	PPA Energy Generation	827,814.65241	kWh	$0.119	FIXED	$98,509.94 USD
Subtotal							**$98,509.94 USD**

Current Balance:	$98,509.94 USD
Statement Grand Total:	$98,509.94 USD

Hatch Solar Energy Center I, LLC

[redacted]
700 Universe Blvd
Juno Beach, FL 33408

ACH PAYMENT INSTRUCTIONS

[redacted]

WIRE PAYMENT INSTRUCTIONS

[redacted]

FOR QUESTIONS CONTACT

Analyst:	Svetlana Vorobieva
Email:	NEER-Revenue-Team.SharedMailbox@nexteraenergy.com

RENEWABLE ENERGY CERTIFICATE

Period: For the month of March 2024

Source of REC: Renewable Energy Provider

Hatch Solar Energy Center I, LLC
7349 Highway 26
Hatch, NM 87937

Contact: Daniel Dorsano
Business Manager 700
Universe Blvd, FEB/JB
E3225
Juno Beach, FL 33408

Generator type:	Concentrating Solar Photovoltaic
Nameplate capacity (in MW):	5.04 MW
Date of generator start-up:	June 24, 2011
Fuel Source:	Solar
Revenue Meter manufacturer and identification / serial number:	ION 7650 / LJ-1105A306-02
Location of generator:	32° 37.527'N, 107° 15.586'W

Renewable Energy Purchaser:

Interconnection Utility: El Paso Electric Company

Control Area Operator: El Paso Electric Company

EPE Contact:
Evan Evans
P.O. Box 982
El Paso, TX 79960
(915) 543-5995
Fax (915) 521-4729

MONTHLY STATEMENT OF RECS

Renewable Energy delivery for the month of March 2024

Energy Delivered 834,440.60 kWh

SUPPLIER CERTIFICATION

I, Daniel Dorsano, herby certify that:

The energy produced, sold and delivered by Hatch Solar Energy Center I, LLC to El Paso Electric Company from these facilities is from a renewable energy resource, as defined by the New Mexico Renewable Energy Act, NMSA 1978, Section 62-16-1 et seq., and the NMPRC Rule 572, Renewable Energy For Electric Utilities, 17.9.572 NMAC;

Each kilowatt hour of electricity is generated using a solar fuel source; and

No other Renewable Energy Certificates associated with the renewable energy produced and delivered by Hatch Solar Energy Center I, LLC to El Paso Electric Company have been traded, sold, retired or otherwise transferred by Hatch Solar Energy Center I, LLC to any other person or entity.

Daniel M. Dorsano

Daniel Dorsano

Business Manager

DATE: 04/04/2024

Hatch Solar Energy Center I, LLC

[redacted]
700 Universe Blvd
Juno Beach, FL 33408

2024 April

BILL TO

El Paso Electric Company
Attn: Settlement Admin

SETTLEMENT DETAILS

Number:	3557
Date:	05-06-2024
Due Date:	06-04-2024
Grand Total:	$123,526.74 USD

Energy

Start Dt	End Dt	Description	Volume	UoM	Price	Price Type	Amount Due
04/01/2024	04/30/2024	PPA Energy Generation	1,038,039.79607	kWh	$0.119	FIXED	$123,526.74 USD
Subtotal							**$123,526.74 USD**

Current Balance:	$123,526.74 USD
Statement Grand Total:	$123,526.74 USD

Hatch Solar Energy Center I, LLC

[redacted]
700 Universe Blvd
Juno Beach, FL 33408

ACH PAYMENT INSTRUCTIONS

[redacted]

WIRE PAYMENT INSTRUCTIONS

[redacted]

FOR QUESTIONS CONTACT

Analyst:	Svetlana Vorobieva
Email:	NEER-Revenue-Team.SharedMailbox@nexteraenergy.com

RENEWABLE ENERGY CERTIFICATE

Period: For the month of April 2024

Source of REC: Renewable Energy Provider

Hatch Solar Energy Center I, LLC
7349 Highway 26
Hatch, NM 87937

Contact: Daniel Dorsano
Business Manager 700
Universe Blvd, FEB/JB
E3225
Juno Beach, FL 33408

Generator type:	Concentrating Solar Photovoltaic
Nameplate capacity (in MW):	5.04 MW
Date of generator start-up:	June 24, 2011
Fuel Source:	Solar
Revenue Meter manufacturer and identification / serial number:	ION 7650 / LJ-1105A306-02
Location of generator:	32° 37.527'N, 107° 15.586'W

Renewable Energy Purchaser:

Interconnection Utility: El Paso Electric Company

Control Area Operator: El Paso Electric Company

EPE Contact:
Evan Evans
P.O. Box 982
El Paso, TX 79960
(915) 543-5995
Fax (915) 521-4729

MONTHLY STATEMENT OF RECS

Renewable Energy delivery for the month of April 2024

Energy Delivered 1,043,931.70 kWh

SUPPLIER CERTIFICATION

I, Daniel Dorsano, herby certify that:

The energy produced, sold and delivered by Hatch Solar Energy Center I, LLC to El Paso Electric Company from these facilities is from a renewable energy resource, as defined by the New Mexico Renewable Energy Act, NMSA 1978, Section 62-16-1 et seq., and the NMPRC Rule 572, Renewable Energy For Electric Utilities, 17.9.572 NMAC;

Each kilowatt hour of electricity is generated using a solar fuel source; and

No other Renewable Energy Certificates associated with the renewable energy produced and delivered by Hatch Solar Energy Center I, LLC to El Paso Electric Company have been traded, sold, retired or otherwise transferred by Hatch Solar Energy Center I, LLC to any other person or entity.

Daniel M. Dorsano

Daniel Dorsano

Business Manager

DATE: 05/06/2024

2024 May

Hatch Solar Energy Center I, LLC

[redacted]
700 Universe Blvd
Juno Beach, FL 33408

BILL TO

El Paso Electric Company
Attn: Settlement Admin

SETTLEMENT DETAILS

Number:	3884
Date:	06-07-2024
Due Date:	07-09-2024
Grand Total:	$134,196.17 USD

Energy

Start Dt	End Dt	Description	Volume	UoM	Price	Price Type	Amount Due
05/01/2024	05/31/2024	PPA Energy Generation	1,127,698.94339	kWh	$0.119	FIXED	$134,196.17 USD
Subtotal							**$134,196.17 USD**

Current Balance:	$134,196.17 USD
Statement Grand Total:	$134,196.17 USD

Hatch Solar Energy Center I, LLC

[redacted]
700 Universe Blvd
Juno Beach, FL 33408

ACH PAYMENT INSTRUCTIONS

[redacted]

WIRE PAYMENT INSTRUCTIONS

[redacted]

FOR QUESTIONS CONTACT

Analyst:	Svetlana Vorobieva
Email:	NEER-Revenue-Team.SharedMailbox@nexteraenergy.com

RENEWABLE ENERGY CERTIFICATE

Period: For the month of May 2024

Source of REC: Renewable Energy Provider

Hatch Solar Energy Center I, LLC
7349 Highway 26
Hatch, NM 87937

Contact: Daniel Dorsano
Business Manager 700
Universe Blvd, FEB/JB
E3225
Juno Beach, FL 33408

Generator type:	Concentrating Solar Photovoltaic
Nameplate capacity (in MW):	5.04 MW
Date of generator start-up:	June 24, 2011
Fuel Source:	Solar
Revenue Meter manufacturer and identification / serial number:	ION 7650 / LJ-1105A306-02
Location of generator:	32° 37.527'N, 107° 15.586'W

Renewable Energy Purchaser:

Interconnection Utility: El Paso Electric Company

Control Area Operator: El Paso Electric Company

EPE Contact:
Evan Evans
P.O. Box 982
El Paso, TX 79960
(915) 543-5995
Fax (915) 521-4729

MONTHLY STATEMENT OF RECS

Renewable Energy delivery for the month of May 2024

Energy Delivered 1,132,989.50 kWh

SUPPLIER CERTIFICATION

I, Daniel Dorsano, herby certify that:

The energy produced, sold and delivered by Hatch Solar Energy Center I, LLC to El Paso Electric Company from these facilities is from a renewable energy resource, as defined by the New Mexico Renewable Energy Act, NMSA 1978, Section 62-16-1 et seq., and the NMPRC Rule 572, Renewable Energy For Electric Utilities, 17.9.572 NMAC;

Each kilowatt hour of electricity is generated using a solar fuel source; and

No other Renewable Energy Certificates associated with the renewable energy produced and delivered by Hatch Solar Energy Center I, LLC to El Paso Electric Company have been traded, sold, retired or otherwise transferred by Hatch Solar Energy Center I, LLC to any other person or entity.

Daniel M. Dorsano

Daniel Dorsano

Business Manager

DATE: 06/07/2024

Hatch Solar Energy Center I, LLC

[redacted]
700 Universe Blvd
Juno Beach, FL 33408

BILL TO

El Paso Electric Company
Attn: Settlement Admin

SETTLEMENT DETAILS

Statement Number:	4168
PO Number:	
Date:	07-08-2024
Due Date:	08-05-2024
Grand Total:	$113,848.17 USD

Energy

Start Dt	End Dt	Description	Volume	UoM	Price	Price Type	Amount Due
06/01/2024	06/30/2024	PPA Energy Generation	956,707.28473	kWh	$0.12	FIXED	$113,848.17 USD
Subtotal							**$113,848.17 USD**

Current Balance:	$113,848.17 USD
Statement Grand Total:	$113,848.17 USD

Hatch Solar Energy Center I, LLC

[redacted]
700 Universe Blvd
Juno Beach, FL 33408

ACH PAYMENT INSTRUCTIONS

[redacted]

WIRE PAYMENT INSTRUCTIONS

[redacted]

FOR QUESTIONS CONTACT

Analyst:	Svetlana Vorobieva
Email:	NEER-Revenue-Team.SharedMailbox@nexteraenergy.com

RENEWABLE ENERGY CERTIFICATE

Period: For the month of June 2024

Source of REC: Renewable Energy Provider

Hatch Solar Energy Center I, LLC
7349 Highway 26
Hatch, NM 87937

Contact: Daniel Dorsano
Business Manager 700
Universe Blvd, FEB/JB
E3225
Juno Beach, FL 33408

Generator type:	Concentrating Solar Photovoltaic
Nameplate capacity (in MW):	5.04 MW
Date of generator start-up:	June 24, 2011
Fuel Source:	Solar
Revenue Meter manufacturer and identification / serial number:	ION 7650 / LJ-1105A306-02
Location of generator:	32° 37.527'N, 107° 15.586'W

Renewable Energy Purchaser:

Interconnection Utility: El Paso Electric Company

Control Area Operator: El Paso Electric Company

EPE Contact:
Evan Evans
P.O. Box 982
El Paso, TX 79960
(915) 543-5995
Fax (915) 521-4729

MONTHLY STATEMENT OF RECS

Renewable Energy delivery for the month of June 2024

Energy Delivered 961,900.10 kWh

SUPPLIER CERTIFICATION

I, Daniel Dorsano, herby certify that:

The energy produced, sold and delivered by Hatch Solar Energy Center I, LLC to El Paso Electric Company from these facilities is from a renewable energy resource, as defined by the New Mexico Renewable Energy Act, NMSA 1978, Section 62-16-1 et seq., and the NMPRC Rule 572, Renewable Energy For Electric Utilities, 17.9.572 NMAC;

Each kilowatt hour of electricity is generated using a solar fuel source; and

No other Renewable Energy Certificates associated with the renewable energy produced and delivered by Hatch Solar Energy Center I, LLC to El Paso Electric Company have been traded, sold, retired or otherwise transferred by Hatch Solar Energy Center I, LLC to any other person or entity.

Daniel M. Dorsano

Daniel Dorsano

Business Manager

DATE: 07/08/2024

2024 July

Hatch Solar Energy Center I, LLC

[redacted]
700 Universe Blvd
Juno Beach, FL 33408

BILL TO

El Paso Electric Company
Attn: Settlement Admin

SETTLEMENT DETAILS

Statement Number:	4468
PO Number:	
Date:	08-06-2024
Due Date:	09-04-2024
Grand Total:	$116,288.57 USD

Energy

Start Dt	End Dt	Description	Volume	UoM	Price	Price Type	Amount Due
07/01/2024	07/31/2024	PPA Energy Generation	977,214.87861	kWh	$0.12	FIXED	$116,288.57 USD
Subtotal							**$116,288.57 USD**

Current Balance:	$116,288.57 USD
Statement Grand Total:	$116,288.57 USD

Hatch Solar Energy Center I, LLC

[redacted]
700 Universe Blvd
Juno Beach, FL 33408

ACH PAYMENT INSTRUCTIONS

[redacted]

WIRE PAYMENT INSTRUCTIONS

[redacted]

FOR QUESTIONS CONTACT

Analyst:	Svetlana Vorobieva
Email:	NEER-Revenue-Team.SharedMailbox@nexteraenergy.com

RENEWABLE ENERGY CERTIFICATE

Period: For the month of July 2024

Source of REC: Renewable Energy Provider

Hatch Solar Energy Center I, LLC
7349 Highway 26
Hatch, NM 87937

Contact: Daniel Dorsano
Business Manager 700
Universe Blvd, FEB/JB
E3225
Juno Beach, FL 33408

Generator type:	Concentrating Solar Photovoltaic
Nameplate capacity (in MW):	5.04 MW
Date of generator start-up:	June 24, 2011
Fuel Source:	Solar
Revenue Meter manufacturer and identification / serial number:	ION 7650 / LJ-1105A306-02
Location of generator:	32° 37.527'N, 107° 15.586'W

Renewable Energy Purchaser:

Interconnection Utility: El Paso Electric Company

Control Area Operator: El Paso Electric Company

EPE Contact:
Evan Evans
P.O. Box 982
El Paso, TX 79960
(915) 543-5995
Fax (915) 521-4729

MONTHLY STATEMENT OF RECS

Renewable Energy delivery for the month of July 2024

Energy Delivered 982,567.60 kWh

SUPPLIER CERTIFICATION

I, Daniel Dorsano, herby certify that:

The energy produced, sold and delivered by Hatch Solar Energy Center I, LLC to El Paso Electric Company from these facilities is from a renewable energy resource, as defined by the New Mexico Renewable Energy Act, NMSA 1978, Section 62-16-1 et seq., and the NMPRC Rule 572, Renewable Energy For Electric Utilities, 17.9.572 NMAC;

Each kilowatt hour of electricity is generated using a solar fuel source; and

No other Renewable Energy Certificates associated with the renewable energy produced and delivered by Hatch Solar Energy Center I, LLC to El Paso Electric Company have been traded, sold, retired or otherwise transferred by Hatch Solar Energy Center I, LLC to any other person or entity.

Daniel M. Dorsano

Daniel Dorsano

Business Manager

DATE: 08/06/2024

Hatch Solar Energy Center I, LLC

2024 August

[redacted]
700 Universe Blvd
Juno Beach, FL 33408

BILL TO

El Paso Electric Company
Attn: Settlement Admin

SETTLEMENT DETAILS

Statement Number:	4819
PO Number:	
Date:	09-05-2024
Due Date:	10-03-2024
Grand Total:	$105,363.88 USD

Energy

Start Dt	End Dt	Description	Volume	UoM	Price	Price Type	Amount Due
08/01/2024	08/31/2024	PPA Energy Generation	885,410.71508	kWh	$0.12	FIXED	$105,363.88 USD
Subtotal							**$105,363.88 USD**

Current Balance:	$105,363.88 USD
Statement Grand Total:	$105,363.88 USD

Hatch Solar Energy Center I, LLC

[redacted]
700 Universe Blvd
Juno Beach, FL 33408

ACH PAYMENT INSTRUCTIONS

[redacted]

WIRE PAYMENT INSTRUCTIONS

[redacted]

FOR QUESTIONS CONTACT

Analyst:	Svetlana Vorobieva
Email:	NEER-Revenue-Team.SharedMailbox@nexteraenergy.com

RENEWABLE ENERGY CERTIFICATE

Period: For the month of August 2024

Source of REC: Renewable Energy Provider

Hatch Solar Energy Center I, LLC
7349 Highway 26
Hatch, NM 87937

Contact: Daniel Dorsano
Business Manager 700
Universe Blvd, FEB/JB
E3225
Juno Beach, FL 33408

Generator type:	Concentrating Solar Photovoltaic
Nameplate capacity (in MW):	5.04 MW
Date of generator start-up:	June 24, 2011
Fuel Source:	Solar
Revenue Meter manufacturer and identification / serial number:	ION 7650 / LJ-1105A306-02
Location of generator:	32° 37.527'N, 107° 15.586'W

Renewable Energy Purchaser:

Interconnection Utility: El Paso Electric Company

Control Area Operator: El Paso Electric Company

EPE Contact:
Evan Evans
P.O. Box 982
El Paso, TX 79960
(915) 543-5995
Fax (915) 521-4729

MONTHLY STATEMENT OF RECS

Renewable Energy delivery for the month of August 2024

Energy Delivered 891,195.10 kWh

SUPPLIER CERTIFICATION

I, Daniel Dorsano, herby certify that:

The energy produced, sold and delivered by Hatch Solar Energy Center I, LLC to El Paso Electric Company from these facilities is from a renewable energy resource, as defined by the New Mexico Renewable Energy Act, NMSA 1978, Section 62-16-1 et seq., and the NMPRC Rule 572, Renewable Energy For Electric Utilities, 17.9.572 NMAC;

Each kilowatt hour of electricity is generated using a solar fuel source; and

No other Renewable Energy Certificates associated with the renewable energy produced and delivered by Hatch Solar Energy Center I, LLC to El Paso Electric Company have been traded, sold, retired or otherwise transferred by Hatch Solar Energy Center I, LLC to any other person or entity.

Daniel M. Dorsano

Daniel Dorsano

Business Manager

DATE: 09/05/2024

Hatch Solar Energy Center I, LLC 2024 September

[redacted]
700 Universe Blvd
Juno Beach, FL 33408

BILL TO

El Paso Electric Company
Attn: Settlement Admin

SETTLEMENT DETAILS

Statement Number:	5161
PO Number:	
Date:	10-03-2024
Due Date:	11-01-2024
Grand Total:	$101,251.96 USD

Energy

Start Dt	End Dt	Description	Volume	UoM	Price	Price Type	Amount Due
09/01/2024	09/30/2024	PPA Energy Generation	850,856.83607	kWh	$0.12	FIXED	$101,251.96 USD
Subtotal							**$101,251.96 USD**

Current Balance:	$101,251.96 USD
Statement Grand Total:	$101,251.96 USD

Hatch Solar Energy Center I, LLC

[redacted]
700 Universe Blvd
Juno Beach, FL 33408

ACH PAYMENT INSTRUCTIONS

[redacted]

WIRE PAYMENT INSTRUCTIONS

[redacted]

FOR QUESTIONS CONTACT

Analyst:	Svetlana Vorobieva
Email:	NEER-Revenue-Team.SharedMailbox@nexteraenergy.com

RENEWABLE ENERGY CERTIFICATE

Period: For the month of September 2024

Source of REC: Renewable Energy Provider

Hatch Solar Energy Center I, LLC
7349 Highway 26
Hatch, NM 87937

Contact: Daniel Dorsano
Business Manager 700
Universe Blvd, FEB/JB
E3225
Juno Beach, FL 33408

Generator type:	Concentrating Solar Photovoltaic
Nameplate capacity (in MW):	5.04 MW
Date of generator start-up:	June 24, 2011
Fuel Source:	Solar
Revenue Meter manufacturer and identification / serial number:	ION 7650 / LJ-1105A306-02
Location of generator:	32° 37.527'N, 107° 15.586'W

Renewable Energy Purchaser:

Interconnection Utility: El Paso Electric Company

Control Area Operator: El Paso Electric Company

EPE Contact:
Evan Evans
P.O. Box 982
El Paso, TX 79960
(915) 543-5995
Fax (915) 521-4729

MONTHLY STATEMENT OF RECS

Renewable Energy delivery for the month of September 2024

Energy Delivered 856,881.60 kWh

SUPPLIER CERTIFICATION

I, Daniel Dorsano, herby certify that:

The energy produced, sold and delivered by Hatch Solar Energy Center I, LLC to El Paso Electric Company from these facilities is from a renewable energy resource, as defined by the New Mexico Renewable Energy Act, NMSA 1978, Section 62-16-1 et seq., and the NMPRC Rule 572, Renewable Energy For Electric Utilities, 17.9.572 NMAC;

Each kilowatt hour of electricity is generated using a solar fuel source; and

No other Renewable Energy Certificates associated with the renewable energy produced and delivered by Hatch Solar Energy Center I, LLC to El Paso Electric Company have been traded, sold, retired or otherwise transferred by Hatch Solar Energy Center I, LLC to any other person or entity.

Daniel M. Dorsano

Daniel Dorsano

Business Manager

DATE: 10/03/2024

Hatch Solar Energy Center I, LLC

[redacted]
700 Universe Blvd
Juno Beach, FL 33408

BILL TO

El Paso Electric Company
Attn: Settlement Admin

SETTLEMENT DETAILS

Statement Number:	5539
PO Number:	
Date:	11-05-2024
Due Date:	12-05-2024
Grand Total:	$93,750.56 USD

Energy

Start Dt	End Dt	Description	Volume	UoM	Price	Price Type	Amount Due
10/01/2024	10/31/2024	PPA Energy Generation	787,819.86975	kWh	$0.12	FIXED	$93,750.56 USD
Subtotal							**$93,750.56 USD**

Current Balance:	$93,750.56 USD
Statement Grand Total:	$93,750.56 USD

Hatch Solar Energy Center I, LLC

[redacted]
700 Universe Blvd
Juno Beach, FL 33408

ACH PAYMENT INSTRUCTIONS

[redacted]

WIRE PAYMENT INSTRUCTIONS

[redacted]

FOR QUESTIONS CONTACT

Analyst:	Svetlana Vorobieva
Email:	NEER-Revenue-Team.SharedMailbox@nexteraenergy.com

RENEWABLE ENERGY CERTIFICATE

Period: For the month of October 2024

Source of REC: Renewable Energy Provider

Hatch Solar Energy Center I, LLC
7349 Highway 26
Hatch, NM 87937

Contact: Daniel Dorsano
Business Manager 700
Universe Blvd, FEB/JB
E3225
Juno Beach, FL 33408

Generator type:	Concentrating Solar Photovoltaic
Nameplate capacity (in MW):	5.04 MW
Date of generator start-up:	June 24, 2011
Fuel Source:	Solar
Revenue Meter manufacturer and identification / serial number:	ION 7650 / LJ-1105A306-02
Location of generator:	32° 37.527'N, 107° 15.586'W

Renewable Energy Purchaser:

Interconnection Utility: El Paso Electric Company

Control Area Operator: El Paso Electric Company

EPE Contact:
Evan Evans
P.O. Box 982
El Paso, TX 79960
(915) 543-5995
Fax (915) 521-4729

MONTHLY STATEMENT OF RECS

Renewable Energy delivery for the month of October 2024

Energy Delivered 794,811.90 kWh

SUPPLIER CERTIFICATION

I, Daniel Dorsano, herby certify that:

The energy produced, sold and delivered by Hatch Solar Energy Center I, LLC to El Paso Electric Company from these facilities is from a renewable energy resource, as defined by the New Mexico Renewable Energy Act, NMSA 1978, Section 62-16-1 et seq., and the NMPRC Rule 572, Renewable Energy For Electric Utilities, 17.9.572 NMAC;

Each kilowatt hour of electricity is generated using a solar fuel source; and

No other Renewable Energy Certificates associated with the renewable energy produced and delivered by Hatch Solar Energy Center I, LLC to El Paso Electric Company have been traded, sold, retired or otherwise transferred by Hatch Solar Energy Center I, LLC to any other person or entity.

Daniel M. Dorsano

Daniel Dorsano

Business Manager

DATE: 11/05/2024

Hatch Solar Energy Center I, LLC 2024 November

[redacted]
700 Universe Blvd
Juno Beach, FL 33408

BILL TO

El Paso Electric Company
Attn: Settlement Admin

SETTLEMENT DETAILS

Statement Number:	5871
PO Number:	
Date:	12-05-2024
Due Date:	01-06-2025
Grand Total:	$83,817.29 USD

Energy

Start Dt	End Dt	Description	Volume	UoM	Price	Price Type	Amount Due
11/01/2024	11/30/2024	PPA Energy Generation	704,347.00268	kWh	$0.12	FIXED	$83,817.29 USD
Subtotal							**$83,817.29 USD**

Current Balance:	$83,817.29 USD
Statement Grand Total:	$83,817.29 USD

Hatch Solar Energy Center I, LLC

[redacted]
700 Universe Blvd
Juno Beach, FL 33408

ACH PAYMENT INSTRUCTIONS

[redacted]

WIRE PAYMENT INSTRUCTIONS

[redacted]

FOR QUESTIONS CONTACT

Analyst:	Svetlana Vorobieva
Email:	NEER-Revenue-Team.SharedMailbox@nexteraenergy.com

RENEWABLE ENERGY CERTIFICATE

Period: For the month of November 2024

Source of REC: Renewable Energy Provider

Hatch Solar Energy Center I, LLC
7349 Highway 26
Hatch, NM 87937

Contact: Daniel Dorsano
Business Manager 700
Universe Blvd, FEB/JB
E3225
Juno Beach, FL 33408

Generator type:	Concentrating Solar Photovoltaic
Nameplate capacity (in MW):	5.04 MW
Date of generator start-up:	June 24, 2011
Fuel Source:	Solar
Revenue Meter manufacturer and identification / serial number:	ION 7650 / LJ-1105A306-02
Location of generator:	32° 37.527'N, 107° 15.586'W

Renewable Energy Purchaser:

Interconnection Utility: El Paso Electric Company

Control Area Operator: El Paso Electric Company

EPE Contact:
Evan Evans
P.O. Box 982
El Paso, TX 79960
(915) 543-5995
Fax (915) 521-4729

MONTHLY STATEMENT OF RECS

Renewable Energy delivery for the month of November 2024

Energy Delivered 711,809.50 kWh

SUPPLIER CERTIFICATION

I, Daniel Dorsano, herby certify that:

The energy produced, sold and delivered by Hatch Solar Energy Center I, LLC to El Paso Electric Company from these facilities is from a renewable energy resource, as defined by the New Mexico Renewable Energy Act, NMSA 1978, Section 62-16-1 et seq., and the NMPRC Rule 572, Renewable Energy For Electric Utilities, 17.9.572 NMAC;

Each kilowatt hour of electricity is generated using a solar fuel source; and

No other Renewable Energy Certificates associated with the renewable energy produced and delivered by Hatch Solar Energy Center I, LLC to El Paso Electric Company have been traded, sold, retired or otherwise transferred by Hatch Solar Energy Center I, LLC to any other person or entity.

Daniel M. Dorsano

Daniel Dorsano

Business Manager

DATE: 12/05/2024

2024 December

Hatch Solar Energy Center I, LLC

[redacted]
700 Universe Blvd
Juno Beach, FL 33408

BILL TO

El Paso Electric Company
Attn: Settlement Admin

SETTLEMENT DETAILS

Statement Number:	6154
PO Number:	
Date:	01-06-2025
Due Date:	02-04-2025
Grand Total:	$78,183.71 USD

Energy

Start Dt	End Dt	Description	Volume	UoM	Price	Price Type	Amount Due
12/01/2024	12/31/2024	PPA Energy Generation	657,005.96837	kWh	$0.12	FIXED	$78,183.71 USD
Subtotal							**$78,183.71 USD**

Current Balance:	$78,183.71 USD
Statement Grand Total:	$78,183.71 USD

Hatch Solar Energy Center I, LLC

[redacted]
700 Universe Blvd
Juno Beach, FL 33408

ACH PAYMENT INSTRUCTIONS

[redacted]

WIRE PAYMENT INSTRUCTIONS

[redacted]

FOR QUESTIONS CONTACT

Analyst:	Svetlana Vorobieva
Email:	NEER-Revenue-Team.SharedMailbox@nexteraenergy.com

RENEWABLE ENERGY CERTIFICATE

Period: For the month of December 2024

Source of REC: Renewable Energy Provider

Hatch Solar Energy Center I, LLC
7349 Highway 26
Hatch, NM 87937

Contact: Daniel Dorsano
Business Manager 700
Universe Blvd, FEB/JB
E3225
Juno Beach, FL 33408

Generator type:	Concentrating Solar Photovoltaic
Nameplate capacity (in MW):	5.04 MW
Date of generator start-up:	June 24, 2011
Fuel Source:	Solar
Revenue Meter manufacturer and identification / serial number:	ION 7650 / LJ-1105A306-02
Location of generator:	32° 37.527'N, 107° 15.586'W

Renewable Energy Purchaser:

Interconnection Utility: El Paso Electric Company

Control Area Operator: El Paso Electric Company

EPE Contact:
Evan Evans
P.O. Box 982
El Paso, TX 79960
(915) 543-5995
Fax (915) 521-4729

MONTHLY STATEMENT OF RECS

Renewable Energy delivery for the month of December 2024

Energy Delivered 664,992.60 kWh

SUPPLIER CERTIFICATION

I, Daniel Dorsano, herby certify that:

The energy produced, sold and delivered by Hatch Solar Energy Center I, LLC to El Paso Electric Company from these facilities is from a renewable energy resource, as defined by the New Mexico Renewable Energy Act, NMSA 1978, Section 62-16-1 et seq., and the NMPRC Rule 572, Renewable Energy For Electric Utilities, 17.9.572 NMAC;

Each kilowatt hour of electricity is generated using a solar fuel source; and

No other Renewable Energy Certificates associated with the renewable energy produced and delivered by Hatch Solar Energy Center I, LLC to El Paso Electric Company have been traded, sold, retired or otherwise transferred by Hatch Solar Energy Center I, LLC to any other person or entity.

Daniel M. Dorsano

Daniel Dorsano

Business Manager

DATE: 01/06/2025

ATTACHMENT 3

Monthly Solar Energy Purchase Documentation –
Solar Roadrunner LLC

Solar Roadrunner LLC
Source: Monthy FPPCAC Reporting

2024	RECs Purchased kWh	Delivered Energy [1] kWh		Total $
January	2,721,616.0	2,701,840.8	$	344,349.61
February	2,730,119.9	2,712,935.1	$	345,763.57
March	3,787,382.1	3,770,871.4	$	480,597.56
April	4,596,504.9	4,582,152.7	$	583,995.37
May	5,623,020.9	5,609,155.8	$	714,886.90
June	4,403,773.5	4,390,367.4	$	559,552.32
July	4,400,764.9	4,386,987.5	$	559,121.56
August	4,546,572.6	4,530,808.7	$	571,703.68
September	4,202,972.7	4,186,856.9	$	533,614.91
October	3,712,798.1	3,693,925.3	$	470,790.78
November	2,809,020.6	2,789,349.2	$	355,502.56
December	2,513,015.7	2,492,721.6	$	317,697.37
Total	46,047,561.9	45,847,972.4	$	5,837,576.19

[1] Delivered energy equals gross production net of station power.

Clearway

2024 January

Solar Roadrunner LLC
4900 N Scottsdale Rd #5000
Scottsdale, AZ 85251

Invoice Date:	2/2/2024
Invoice Number:	0124
Due Date:	3/1/2024

El Paso Electric Company
PO Box 982
El Paso, TX 79901

Attn: Energy Accounting

Sales:	**Mwh**		**Rate**		**Amount**
Post COD - Contract Energy Rate					
December-23 Energy - Delivered	2,721.616	$	127.45	$	346,869.96
December-23 Energy - Received	(19.775)	$	127.45	$	(2,520.35)
December-23 Energy-Delivered in excess of 115% expected	-	$	95.59	$	-
Total due Solar Roadrunner LLC	**2,701.841**			**$**	**344,349.61**

COD 8/29/2011

Please note new banking instructions:

[redacted]

REF: [redacted]

Please direct all correspondence concerning this invoice to settlements@clearwayenergy.com

RENEWABLE ENERGY CERTIFICATE

Period: For the month of January 2024

Source of REC: Renewable Energy Provider

Solar Roadrunner LLC
5790 Fleet Street, Suite 200
Carlsbad, CA 92008

Contact: Tiana Ribeiro Goelz - Settlements
4900 N Scottsdale Road, Suite 5000
Scottsdale, AZ 85251
Tiana.ribeirogoelz@clearwayenergy.com

Generator type: Photovoltaic Solar
Nameplate capacity (in MW): 20 MW
Date of generator start-up: July 20, 2011 [COD August 29, 2011]
Fuel Source: Solar
Revenue Meter manufacturer and identification/serial number:
Landis & Gyr/074564006
Location of generator: 6500 Bi-National Avenue
Santa Teresa, NM 88044

Renewable Energy Purchaser

Interconnection Utility: El Paso Electric Company
Control Area Operator: El Paso Electric Company

EPE Contact:
Ruben Quiroga
Daniel Fraire
P.O. Box 982
El Paso, TX 79960
(913) 521-4475
(915) 526-3978 Cell

Monthly Statement of RECs

Renewable Energy delivered for the month of January 2024

Energy Delivered: 2,721,616.014 kWh

Supplier Certification

I, Tiana Ribeiro Goelz, hereby certify that:

The energy produced, sold and delivered by Solar Roadrunner LLC to El Paso Electric Company from this facility is from a renewable energy resource, as defined by the New Mexico Renewable Energy Act, NMSA 1978, Section 62-16-1 et seq., and the NMPRC Rule 572, Renewable Energy for Electric Utilities, 17.9.572 NMAC;

Each kilowatt hour of electricity is generated using a solar fuel source; and

No other Renewable Energy Certificates associated with the renewable energy produced and delivered by Solar Roadrunner LLC to El Paso Electric Company have been traded, sold, retired, or otherwise transferred by Solar Roadrunner LLC to any other person or entity.

By: Tiana Ribeiro Goelz
Tiana Ribeiro Goelz

02/02/2024

2024 February

Clearway

Solar Roadrunner LLC
4900 N Scottsdale Rd #5000
Scottsdale, AZ 85251

Invoice Date:	3/1/2024
Invoice Number:	02/24
Due Date:	3/29/2024

El Paso Electric Company
PO Box 982
El Paso, TX 79901

Attn: Energy Accounting

Sales:	**Mwh**	**Rate**	**Amount**
Post COD - Contract Energy Rate			
December-23 Energy - Delivered	2,730.120	$ 127.45	$ 347,953.78
December-23 Energy - Received	(17.185)	$ 127.45	$ (2,190.21)
December-23 Energy-Delivered in excess of 115% expected	-	$ 95.59	$ -
Total due Solar Roadrunner LLC	**2,712.935**		**$ 345,763.57**

COD 8/29/2011

Please note new banking instructions:
Wire Instructions:

[redacted]

Please direct all correspondence concerning this invoice to settlements@clearwayenergy.com

RENEWABLE ENERGY CERTIFICATE

Period: For the month of February 2024

Source of REC: Renewable Energy Provider

Solar Roadrunner LLC
5790 Fleet Street, Suite 200
Carlsbad, CA 92008

Contact: Tiana Ribeiro Goelz - Settlements
4900 N Scottsdale Road, Suite 5000
Scottsdale, AZ 85251
Tiana.ribeirogoelz@clearwayenergy.com

Generator type: Photovoltaic Solar
Nameplate capacity (in MW): 20 MW
Date of generator start-up: July 20, 2011 [COD August 29, 2011]
Fuel Source: Solar
Revenue Meter manufacturer and identification/serial number:
Landis & Gyr/074564006
Location of generator: 6500 Bi-National Avenue
Santa Teresa, NM 88044

Renewable Energy Purchaser

Interconnection Utility: El Paso Electric Company
Control Area Operator: El Paso Electric Company

EPE Contact:
Ruben Quiroga
Daniel Fraire
P.O. Box 982
El Paso, TX 79960
(913) 521-4475
(915) 526-3978 Cell

Monthly Statement of RECs

Renewable Energy delivered for the month of February 2024

Energy Delivered: 2,730,119.875 kWh

Supplier Certification

I, Tiana Ribeiro Goelz, hereby certify that:

The energy produced, sold and delivered by Solar Roadrunner LLC to El Paso Electric Company from this facility is from a renewable energy resource, as defined by the New Mexico Renewable Energy Act, NMSA 1978, Section 62-16-1 et seq., and the NMPRC Rule 572, Renewable Energy for Electric Utilities, 17.9.572 NMAC;

Each kilowatt hour of electricity is generated using a solar fuel source; and

No other Renewable Energy Certificates associated with the renewable energy produced and delivered by Solar Roadrunner LLC to El Paso Electric Company have been traded, sold, retired, or otherwise transferred by Solar Roadrunner LLC to any other person or entity.

By: Tiana Ribeiro Goelz
Tiana Ribeiro Goelz

03/01/2024

2024 March

Clearway

Solar Roadrunner LLC
4900 N Scottsdale Rd #5000
Scottsdale, AZ 85251

Invoice Date:	4/1/2024
Invoice Number:	03/24
Due Date:	4/29/2024

El Paso Electric Company
PO Box 982
El Paso, TX 79901

Attn: Energy Accounting

Sales:	**Mwh**	**Rate**	**Amount**
Post COD - Contract Energy Rate			
March-24 Energy - Delivered	3,787.382	$ 127.45	$ 482,701.85
March-24 Energy - Received	(16.511)	$ 127.45	$ (2,104.29)
March-24 Energy-Delivered in excess of 115% expected	-	$ 95.59	$ -
Total due Solar Roadrunner LLC	**3,770.871**		**$ 480,597.56**

COD 8/29/2011

Please note new banking instructions:

[redacted]

Please direct all correspondence concerning this invoice to settlements@clearwayenergy.com

RENEWABLE ENERGY CERTIFICATE

Period: For the month of March 2024

Source of REC: Renewable Energy Provider

Solar Roadrunner LLC
5790 Fleet Street, Suite 200
Carlsbad, CA 92008

Contact: Tiana Ribeiro Goelz - Settlements
4900 N Scottsdale Road, Suite 5000
Scottsdale, AZ 85251
Tiana.ribeirogoelz@clearwayenergy.com

Generator type: Photovoltaic Solar
Nameplate capacity (in MW): 20 MW
Date of generator start-up: July 20, 2011 [COD August 29, 2011]
Fuel Source: Solar
Revenue Meter manufacturer and identification/serial number:
Landis & Gyr/074564006
Location of generator: 6500 Bi-National Avenue
Santa Teresa, NM 88044

Renewable Energy Purchaser

Interconnection Utility: El Paso Electric Company
Control Area Operator: El Paso Electric Company

EPE Contact:
Ruben Quiroga
Daniel Fraire
P.O. Box 982
El Paso, TX 79960
(913) 521-4475
(915) 526-3978 Cell

Monthly Statement of RECs

Renewable Energy delivered for the month of March 2024

Energy Delivered: 3,787,382.116 kWh

Supplier Certification

I, Tiana Ribeiro Goelz, hereby certify that:

The energy produced, sold and delivered by Solar Roadrunner LLC to El Paso Electric Company from this facility is from a renewable energy resource, as defined by the New Mexico Renewable Energy Act, NMSA 1978, Section 62-16-1 et seq., and the NMPRC Rule 572, Renewable Energy for Electric Utilities, 17.9.572 NMAC;

Each kilowatt hour of electricity is generated using a solar fuel source; and

No other Renewable Energy Certificates associated with the renewable energy produced and delivered by Solar Roadrunner LLC to El Paso Electric Company have been traded, sold, retired, or otherwise transferred by Solar Roadrunner LLC to any other person or entity.

By: Tiana Ribeiro Goelz
Tiana Ribeiro Goelz

04/01/2024

2024 April

Clearway

Solar Roadrunner LLC
4900 N Scottsdale Rd #5000
Scottsdale, AZ 85251

Invoice Date:	5/1/2024
Invoice Number:	04/24
Due Date:	5/29/2024

El Paso Electric Company
PO Box 982
El Paso, TX 79901

Attn: Energy Accounting

Sales:	**Mwh**		**Rate**		**Amount**
Post COD - Contract Energy Rate					
April-24 Energy - Delivered	4,596.505	$	127.45	$	585,824.55
April-24 Energy - Received	(14.352)	$	127.45	$	(1,829.19)
April-24 Energy-Delivered in excess of 115% expected	-	$	95.59	$	-
Total due Solar Roadrunner LLC	**4,582.153**			**$**	**583,995.37**

COD 8/29/2011

Please note new banking instructions:

[redacted]

Please direct all correspondence concerning this invoice to settlements@clearwayenergy.com

RENEWABLE ENERGY CERTIFICATE

Period: For the month of April 2024

Source of REC: Renewable Energy Provider

Solar Roadrunner LLC
5790 Fleet Street, Suite 200
Carlsbad, CA 92008

Contact: Tiana Ribeiro Goelz - Settlements
4900 N Scottsdale Road, Suite 5000
Scottsdale, AZ 85251
Tiana.ribeirogoelz@clearwayenergy.com

Generator type: Photovoltaic Solar
Nameplate capacity (in MW): 20 MW
Date of generator start-up: July 20, 2011 [COD August 29, 2011]
Fuel Source: Solar
Revenue Meter manufacturer and identification/serial number:
Landis & Gyr/074564006
Location of generator: 6500 Bi-National Avenue
Santa Teresa, NM 88044

Renewable Energy Purchaser

Interconnection Utility: El Paso Electric Company
Control Area Operator: El Paso Electric Company

EPE Contact:
Ruben Quiroga
Daniel Fraire
P.O. Box 982
El Paso, TX 79960
(913) 521-4475
(915) 526-3978 Cell

Monthly Statement of RECs

Renewable Energy delivered for the month of April 2024

Energy Delivered: 4,596,504.938 kWh

Supplier Certification

I, Tiana Ribeiro Goelz, hereby certify that:

The energy produced, sold and delivered by Solar Roadrunner LLC to El Paso Electric Company from this facility is from a renewable energy resource, as defined by the New Mexico Renewable Energy Act, NMSA 1978, Section 62-16-1 et seq., and the NMPRC Rule 572, Renewable Energy for Electric Utilities, 17.9.572 NMAC;

Each kilowatt hour of electricity is generated using a solar fuel source; and

No other Renewable Energy Certificates associated with the renewable energy produced and delivered by Solar Roadrunner LLC to El Paso Electric Company have been traded, sold, retired, or otherwise transferred by Solar Roadrunner LLC to any other person or entity.

By: Tiana Ribeiro Goelz
Tiana Ribeiro Goelz

05/01/2024

2024 May

Clearway

Solar Roadrunner LLC
4900 N Scottsdale Rd #5000
Scottsdale, AZ 85251

Invoice Date:	6/3/2024
Invoice Number:	05/24
Due Date:	6/28/2024

El Paso Electric Company
PO Box 982
El Paso, TX 79901

Attn: Energy Accounting

Sales:	**Mwh**	**Rate**	**Amount**
Post COD - Contract Energy Rate			
May-24 Energy - Delivered	5,623.021	$ 127.45	$ 716,654.01
May-24 Energy - Received	(13.865)	$ 127.45	$ (1,767.10)
May-24 Energy-Delivered in excess of 115% expected	-	$ 95.59	$ -
Total due Solar Roadrunner LLC	**5,609.156**		**$ 714,886.90**

COD 8/29/2011

Please note new banking instructions:

[redacted]

Please direct all correspondence concerning this invoice to settlements@clearwayenergy.com

RENEWABLE ENERGY CERTIFICATE

Period: For the month of May 2024

Source of REC: Renewable Energy Provider

Solar Roadrunner LLC
5790 Fleet Street, Suite 200
Carlsbad, CA 92008

Contact: Tiana Ribeiro Goelz - Settlements
4900 N Scottsdale Road, Suite 5000
Scottsdale, AZ 85251
Tiana.ribeirogoelz@clearwayenergy.com

Generator type: Photovoltaic Solar
Nameplate capacity (in MW): 20 MW
Date of generator start-up: July 20, 2011 [COD August 29, 2011]
Fuel Source: Solar
Revenue Meter manufacturer and identification/serial number:
Landis & Gyr/074564006
Location of generator: 6500 Bi-National Avenue
Santa Teresa, NM 88044

Renewable Energy Purchaser

Interconnection Utility: El Paso Electric Company
Control Area Operator: El Paso Electric Company

EPE Contact:
Ruben Quiroga
Daniel Fraire
P.O. Box 982
El Paso, TX 79960
(913) 521-4475
(915) 526-3978 Cell

Monthly Statement of RECs

Renewable Energy delivered for the month of May 2024

Energy Delivered: 5,623,020.852 kWh

Supplier Certification

I, Tiana Ribeiro Goelz, hereby certify that:

The energy produced, sold and delivered by Solar Roadrunner LLC to El Paso Electric Company from this facility is from a renewable energy resource, as defined by the New Mexico Renewable Energy Act, NMSA 1978, Section 62-16-1 et seq., and the NMPRC Rule 572, Renewable Energy for Electric Utilities, 17.9.572 NMAC;

Each kilowatt hour of electricity is generated using a solar fuel source; and

No other Renewable Energy Certificates associated with the renewable energy produced and delivered by Solar Roadrunner LLC to El Paso Electric Company have been traded, sold, retired, or otherwise transferred by Solar Roadrunner LLC to any other person or entity.

By: Tiana Ribeiro Goelz
Tiana Ribeiro Goelz

06/03/2024

2024 June

Clearway

Solar Roadrunner LLC
4900 N Scottsdale Rd #5000
Scottsdale, AZ 85251

Invoice Date:	7/1/2024
Invoice Number:	06/24
Due Date:	7/29/2024

El Paso Electric Company
PO Box 982
El Paso, TX 79901

Attn: Energy Accounting

Sales:	**Mwh**	**Rate**	**Amount**
Post COD - Contract Energy Rate			
June-24 Energy - Delivered	4,403.774	$ 127.45	$ 561,260.93
June-24 Energy - Received	(13.406)	$ 127.45	$ (1,708.61)
June-24 Energy-Delivered in excess of 115% expected	-	$ 95.59	$ -
Total due Solar Roadrunner LLC	**4,390.367**		**$ 559,552.32**

COD 8/29/2011

Please note new banking instructions:

[redacted]

Please direct all correspondence concerning this invoice to settlements@clearwayenergy.com

RENEWABLE ENERGY CERTIFICATE

Period: For the month of June 2024

Source of REC: Renewable Energy Provider

Solar Roadrunner LLC
5790 Fleet Street, Suite 200
Carlsbad, CA 92008

Contact: Tiana Ribeiro Goelz - Settlements
4900 N Scottsdale Road, Suite 5000
Scottsdale, AZ 85251
Tiana.ribeirogoelz@clearwayenergy.com

Generator type: Photovoltaic Solar
Nameplate capacity (in MW): 20 MW
Date of generator start-up: July 20, 2011 [COD August 29, 2011]
Fuel Source: Solar
Revenue Meter manufacturer and identification/serial number:
Landis & Gyr/074564006
Location of generator: 6500 Bi-National Avenue
Santa Teresa, NM 88044

Renewable Energy Purchaser

Interconnection Utility: El Paso Electric Company
Control Area Operator: El Paso Electric Company

EPE Contact:
Ruben Quiroga
Daniel Fraire
P.O. Box 982
El Paso, TX 79960
(913) 521-4475
(915) 526-3978 Cell

Monthly Statement of RECs

Renewable Energy delivered for the month of June 2024

Energy Delivered: 4,403,773.517 kWh

Supplier Certification

I, Tiana Ribeiro Goelz, hereby certify that:

The energy produced, sold and delivered by Solar Roadrunner LLC to El Paso Electric Company from this facility is from a renewable energy resource, as defined by the New Mexico Renewable Energy Act, NMSA 1978, Section 62-16-1 et seq., and the NMPRC Rule 572, Renewable Energy for Electric Utilities, 17.9.572 NMAC;

Each kilowatt hour of electricity is generated using a solar fuel source; and

No other Renewable Energy Certificates associated with the renewable energy produced and delivered by Solar Roadrunner LLC to El Paso Electric Company have been traded, sold, retired, or otherwise transferred by Solar Roadrunner LLC to any other person or entity.

By: Tiana Ribeiro Goelz
Tiana Ribeiro Goelz

07/01/2024

2024 July

Clearway

Solar Roadrunner LLC
4900 N Scottsdale Rd #5000
Scottsdale, AZ 85251

Invoice Date:	8/1/2024
Invoice Number:	07/24
Due Date:	8/29/2024

El Paso Electric Company
PO Box 982
El Paso, TX 79901

Attn: Energy Accounting

Sales:	**Mwh**	**Rate**	**Amount**
Post COD - Contract Energy Rate			
July-24 Energy - Delivered	4,400.765	$ 127.45	$ 560,877.49
July-24 Energy - Received	(13.777)	$ 127.45	$ (1,755.93)
July-24 Energy-Delivered in excess of 115% expected	-	$ 95.59	$ -
Total due Solar Roadrunner LLC	**4,386.988**		**$ 559,121.56**

COD 8/29/2011

Please note new banking instructions:

[redacted]

Please direct all correspondence concerning this invoice to settlements@clearwayenergy.com

RENEWABLE ENERGY CERTIFICATE

Period: For the month of July 2024

Source of REC: Renewable Energy Provider

Solar Roadrunner LLC
5790 Fleet Street, Suite 200
Carlsbad, CA 92008

Contact: Tiana Ribeiro Goelz - Settlements
4900 N Scottsdale Road, Suite 5000
Scottsdale, AZ 85251
Tiana.ribeirogoelz@clearwayenergy.com

Generator type:	Photovoltaic Solar
Nameplate capacity (in MW):	20 MW
Date of generator start-up:	July 20, 2011 [COD August 29, 2011]
Fuel Source:	Solar
Revenue Meter manufacturer and identification/serial number:	Landis & Gyr/074564006
Location of generator:	6500 Bi-National Avenue Santa Teresa, NM 88044

Renewable Energy Purchaser

Interconnection Utility: El Paso Electric Company
Control Area Operator: El Paso Electric Company

EPE Contact:
Ruben Quiroga
Daniel Fraire
P.O. Box 982
El Paso, TX 79960
(913) 521-4475
(915) 526-3978 Cell

Monthly Statement of RECs

Renewable Energy delivered for the month of July 2024

Energy Delivered: 4,400,764.915 kWh

Supplier Certification

I, Tiana Ribeiro Goelz, hereby certify that:

The energy produced, sold and delivered by Solar Roadrunner LLC to El Paso Electric Company from this facility is from a renewable energy resource, as defined by the New Mexico Renewable Energy Act, NMSA 1978, Section 62-16-1 et seq., and the NMPRC Rule 572, Renewable Energy for Electric Utilities, 17.9.572 NMAC;

Each kilowatt hour of electricity is generated using a solar fuel source; and

No other Renewable Energy Certificates associated with the renewable energy produced and delivered by Solar Roadrunner LLC to El Paso Electric Company have been traded, sold, retired, or otherwise transferred by Solar Roadrunner LLC to any other person or entity.

By: _____
Tiana Ribeiro Goelz

08/01/2024

2024 August

Clearway

Solar Roadrunner LLC
4900 N Scottsdale Rd #5000
Scottsdale, AZ 85251

Invoice Date:	9/3/2024
Invoice Number:	08/24
Due Date:	9/30/2024

El Paso Electric Company
PO Box 982
El Paso, TX 79901

Attn: Energy Accounting

Sales:		**Mwh**		**Rate**		**Amount**
Post COD - Contract Energy Rate						
August-24 Energy - Delivered		4,366.162	$	127.45	$	556,467.34
August-24 Energy - Received	4,546.573	(15.764)	$	127.45	$	(2,009.11)
August-24 Energy-Delivered in excess of 115% expected		180.411	$	95.59	$	17,245.46
Total due Solar Roadrunner LLC		**4,530.809**			**$**	**571,703.68**

COD 8/29/2011

Please note new banking instructions:

[redacted]

Please direct all correspondence concerning this invoice to settlements@clearwayenergy.com

RENEWABLE ENERGY CERTIFICATE

Period: For the month of August 2024

Source of REC: Renewable Energy Provider

Solar Roadrunner LLC
5790 Fleet Street, Suite 200
Carlsbad, CA 92008

Contact: Tiana Ribeiro Goelz - Settlements
4900 N Scottsdale Road, Suite 5000
Scottsdale, AZ 85251
Tiana.ribeirogoelz@clearwayenergy.com

Generator type: Photovoltaic Solar
Nameplate capacity (in MW): 20 MW
Date of generator start-up: July 20, 2011 [COD August 29, 2011]
Fuel Source: Solar
Revenue Meter manufacturer and identification/serial number:
Landis & Gyr/074564006
Location of generator: 6500 Bi-National Avenue
Santa Teresa, NM 88044

Renewable Energy Purchaser

Interconnection Utility: El Paso Electric Company
Control Area Operator: El Paso Electric Company

EPE Contact:
Ruben Quiroga
Daniel Fraire
P.O. Box 982
El Paso, TX 79960
(913) 521-4475
(915) 526-3978 Cell

Monthly Statement of RECs

Renewable Energy delivered for the month of August 2024

Energy Delivered: 4,546,572.625 kWh

Supplier Certification

I, Tiana Ribeiro Goelz, hereby certify that:

The energy produced, sold and delivered by Solar Roadrunner LLC to El Paso Electric Company from this facility is from a renewable energy resource, as defined by the New Mexico Renewable Energy Act, NMSA 1978, Section 62-16-1 et seq., and the NMPRC Rule 572, Renewable Energy for Electric Utilities, 17.9.572 NMAC;

Each kilowatt hour of electricity is generated using a solar fuel source; and

No other Renewable Energy Certificates associated with the renewable energy produced and delivered by Solar Roadrunner LLC to El Paso Electric Company have been traded, sold, retired, or otherwise transferred by Solar Roadrunner LLC to any other person or entity.

By: _____
Tiana Ribeiro Goelz

09/03/2024

2024 September

Clearway

Solar Roadrunner LLC
4900 N Scottsdale Rd #5000
Scottsdale, AZ 85251

Invoice Date:	10/1/2024
Invoice Number:	09/24
Due Date:	10/29/2024

El Paso Electric Company
PO Box 982
El Paso, TX 79901

Attn: Energy Accounting

Sales:	**Mwh**		**Rate**		**Amount**
Post COD - Contract Energy Rate					
September-24 Energy - Delivered	4,202.973	$	127.45	$	535,668.87
September-24 Energy - Received	(16.116)	$	127.45	$	(2,053.96)
September-24 Energy-Delivered in excess of 115% expected	-	$	95.59	$	-
Total due Solar Roadrunner LLC	**4,186.857**			**$**	**533,614.91**

COD 8/29/2011

Please note new banking instructions:

[redacted]

Please direct all correspondence concerning this invoice to settlements@clearwayenergy.com

RENEWABLE ENERGY CERTIFICATE

Period: For the month of September 2024

Source of REC: Renewable Energy Provider

Solar Roadrunner LLC
5790 Fleet Street, Suite 200
Carlsbad, CA 92008

Contact: Tiana Ribeiro Goelz - Settlements
4900 N Scottsdale Road, Suite 5000
Scottsdale, AZ 85251
Tiana.ribeirogoelz@clearwayenergy.com

Generator type: Photovoltaic Solar
Nameplate capacity (in MW): 20 MW
Date of generator start-up: July 20, 2011 [COD August 29, 2011]
Fuel Source: Solar
Revenue Meter manufacturer and identification/serial number:
Landis & Gyr/074564006
Location of generator: 6500 Bi-National Avenue
Santa Teresa, NM 88044

Renewable Energy Purchaser

Interconnection Utility: El Paso Electric Company
Control Area Operator: El Paso Electric Company

EPE Contact:
Ruben Quiroga
Daniel Fraire
P.O. Box 982
El Paso, TX 79960
(913) 521-4475
(915) 526-3978 Cell

Monthly Statement of RECs

Renewable Energy delivered for the month of September 2024

Energy Delivered: 4,202,972.721 kWh

Supplier Certification

I, Tiana Ribeiro Goelz, hereby certify that:

The energy produced, sold and delivered by Solar Roadrunner LLC to El Paso Electric Company from this facility is from a renewable energy resource, as defined by the New Mexico Renewable Energy Act, NMSA 1978, Section 62-16-1 et seq., and the NMPRC Rule 572, Renewable Energy for Electric Utilities, 17.9.572 NMAC;

Each kilowatt hour of electricity is generated using a solar fuel source; and

No other Renewable Energy Certificates associated with the renewable energy produced and delivered by Solar Roadrunner LLC to El Paso Electric Company have been traded, sold, retired, or otherwise transferred by Solar Roadrunner LLC to any other person or entity.

By: Tiana Ribeiro-Goelz
Tiana Ribeiro Goelz

10/01/2024

Clearway

Solar Roadrunner LLC
4900 N Scottsdale Rd #5000
Scottsdale, AZ 85251

Invoice Date: 11/1/2024
Invoice Number: 10/24

Due Date: 11/29/2024

El Paso Electric Company
PO Box 982
El Paso, TX 79901

Attn: Energy Accounting

Sales:	**Mwh**	**Rate**	**Amount**
Post COD - Contract Energy Rate			
September-24 Energy - Delivered	3,712.798	$ 127.45	$ 473,196.12
September-24 Energy - Received	(18.873)	$ 127.45	$ (2,405.34)
September-24 Energy-Delivered in excess of 115% expected	-	$ 95.59	$ -
Total due Solar Roadrunner LLC	**3,693.925**		**$ 470,790.78**

COD 8/29/2011

Please note new banking instructions:
Wire Instructions:
[redacted]

Please direct all correspondence concerning this invoice to settlements@clearwayenergy.com

RENEWABLE ENERGY CERTIFICATE

Period: For the month of September 2024

Source of REC: Renewable Energy Provider

Solar Roadrunner LLC
5790 Fleet Street, Suite 200
Carlsbad, CA 92008

Contact: Tiana Ribeiro Goelz - Settlements
4900 N Scottsdale Road, Suite 5000
Scottsdale, AZ 85251
Tiana.ribeirogoelz@clearwayenergy.com

Generator type: Photovoltaic Solar
Nameplate capacity (in MW): 20 MW
Date of generator start-up: July 20, 2011 [COD August 29, 2011]
Fuel Source: Solar
Revenue Meter manufacturer and identification/serial number:
Landis & Gyr/074564006
Location of generator: 6500 Bi-National Avenue
Santa Teresa, NM 88044

Renewable Energy Purchaser

Interconnection Utility: El Paso Electric Company
Control Area Operator: El Paso Electric Company

EPE Contact:
Ruben Quiroga
Daniel Fraire
P.O. Box 982
El Paso, TX 79960
(913) 521-4475
(915) 526-3978 Cell

Monthly Statement of RECs

Renewable Energy delivered for the month of September 2024

Energy Delivered: 4,202,972.721 kWh

Supplier Certification

I, Tiana Ribeiro Goelz, hereby certify that:

The energy produced, sold and delivered by Solar Roadrunner LLC to El Paso Electric Company from this facility is from a renewable energy resource, as defined by the New Mexico Renewable Energy Act, NMSA 1978, Section 62-16-1 et seq., and the NMPRC Rule 572, Renewable Energy for Electric Utilities, 17.9.572 NMAC;

Each kilowatt hour of electricity is generated using a solar fuel source; and

No other Renewable Energy Certificates associated with the renewable energy produced and delivered by Solar Roadrunner LLC to El Paso Electric Company have been traded, sold, retired, or otherwise transferred by Solar Roadrunner LLC to any other person or entity.

By: Tiana Ribeiro-Goelz
Tiana Ribeiro Goelz

10/01/2024

2024 November

Clearway

Solar Roadrunner LLC
4900 N Scottsdale Rd #5000
Scottsdale, AZ 85251

Invoice Date:	12/2/2024
Invoice Number:	11/24
Due Date:	12/30/2024

El Paso Electric Company
PO Box 982
El Paso, TX 79901

Attn: Energy Accounting

Sales:	**Mwh**	**Rate**	**Amount**
Post COD - Contract Energy Rate			
November-24 Energy - Delivered	2,809.021	$ 127.45	$ 358,009.68
November-24 Energy - Received	(19.671)	$ 127.45	$ (2,507.12)
November-24 Energy-Delivered in excess of 115% expected	-	$ 95.59	$ -
Total due Solar Roadrunner LLC	**2,789.349**		**$ 355,502.56**

COD 8/29/2011

Please note new banking instructions:

[redacted]

Please direct all correspondence concerning this invoice to settlements@clearwayenergy.com

RENEWABLE ENERGY CERTIFICATE

Period: For the month of November 2024

Source of REC: Renewable Energy Provider

Solar Roadrunner LLC
5790 Fleet Street, Suite 200
Carlsbad, CA 92008

Contact: Tiana Ribeiro Goelz - Settlements
4900 N Scottsdale Road, Suite 5000
Scottsdale, AZ 85251
Tiana.ribeirogoelz@clearwayenergy.com

Generator type: Photovoltaic Solar
Nameplate capacity (in MW): 20 MW
Date of generator start-up: July 20, 2011 [COD August 29, 2011]
Fuel Source: Solar
Revenue Meter manufacturer and identification/serial number:
Landis & Gyr/074564006
Location of generator: 6500 Bi-National Avenue
Santa Teresa, NM 88044

Renewable Energy Purchaser

Interconnection Utility: El Paso Electric Company
Control Area Operator: El Paso Electric Company

EPE Contact:
Ruben Quiroga
Daniel Fraire
P.O. Box 982
El Paso, TX 79960
(913) 521-4475
(915) 526-3978 Cell

Monthly Statement of RECs

Renewable Energy delivered for the month of November 2024

Energy Delivered: 2,809,020.618 kWh

Supplier Certification

I, Tiana Ribeiro Goelz, hereby certify that:

The energy produced, sold and delivered by Solar Roadrunner LLC to El Paso Electric Company from this facility is from a renewable energy resource, as defined by the New Mexico Renewable Energy Act, NMSA 1978, Section 62-16-1 et seq., and the NMPRC Rule 572, Renewable Energy for Electric Utilities, 17.9.572 NMAC;

Each kilowatt hour of electricity is generated using a solar fuel source; and

No other Renewable Energy Certificates associated with the renewable energy produced and delivered by Solar Roadrunner LLC to El Paso Electric Company have been traded, sold, retired, or otherwise transferred by Solar Roadrunner LLC to any other person or entity.

By: Tiana Ribeiro-Goelz
Tiana Ribeiro Goelz

12/02/2024

2024 December

Clearway

Solar Roadrunner LLC
4900 N Scottsdale Rd #5000
Scottsdale, AZ 85251

Invoice Date:	1/3/2025
Invoice Number:	12/24
Due Date:	1/31/2025

El Paso Electric Company
PO Box 982
El Paso, TX 79901

Attn: Energy Accounting

Sales:	**Mwh**	**Rate**	**Amount**
Post COD - Contract Energy Rate			
December-24 Energy - Delivered	2,513.016	$ 127.45	$ 320,283.85
December-24 Energy - Received	(20.294)	$ 127.45	$ (2,586.48)
December-24 Energy-Delivered in excess of 115% expected	-	$ 95.59	$ -
Total due Solar Roadrunner LLC	**2,492.722**		**$ 317,697.37**

COD 8/29/2011

Please note new banking instructions:

[redacted]

Please direct all correspondence concerning this invoice to settlements@clearwayenergy.com

RENEWABLE ENERGY CERTIFICATE

Period: For the month of December 2024

Source of REC: Renewable Energy Provider

Solar Roadrunner LLC
5790 Fleet Street, Suite 200
Carlsbad, CA 92008

Contact: Tiana Ribeiro Goelz - Settlements
4900 N Scottsdale Road, Suite 5000
Scottsdale, AZ 85251
Tiana.ribeirogoelz@clearwayenergy.com

Generator type: Photovoltaic Solar
Nameplate capacity (in MW): 20 MW
Date of generator start-up: July 20, 2011 [COD August 29, 2011]
Fuel Source: Solar
Revenue Meter manufacturer and identification/serial number:
Landis & Gyr/074564006
Location of generator: 6500 Bi-National Avenue
Santa Teresa, NM 88044

Renewable Energy Purchaser

Interconnection Utility: El Paso Electric Company
Control Area Operator: El Paso Electric Company

EPE Contact:
Ruben Quiroga
Daniel Fraire
P.O. Box 982
El Paso, TX 79960
(913) 521-4475
(915) 526-3978 Cell

Monthly Statement of RECs

Renewable Energy delivered for the month of December 2024

Energy Delivered: 2,513,015.723 kWh

Supplier Certification

I, Tiana Ribeiro Goelz, hereby certify that:

The energy produced, sold and delivered by Solar Roadrunner LLC to El Paso Electric Company from this facility is from a renewable energy resource, as defined by the New Mexico Renewable Energy Act, NMSA 1978, Section 62-16-1 et seq., and the NMPRC Rule 572, Renewable Energy for Electric Utilities, 17.9.572 NMAC;

Each kilowatt hour of electricity is generated using a solar fuel source; and

No other Renewable Energy Certificates associated with the renewable energy produced and delivered by Solar Roadrunner LLC to El Paso Electric Company have been traded, sold, retired, or otherwise transferred by Solar Roadrunner LLC to any other person or entity.

By: Tiana Ribeiro-Goelz
Tiana Ribeiro Goelz

01/03/2025

ATTACHMENT 4

Monthly Solar Energy Purchase Documentation –
SunE EPE1 LLC and SunE EPE2 LLC

SunE EPE 1, LLC - Purchased Power Agreement

Source: SunE EPE1, LLC - Solar Statements

2024	RECs Purchased kWh	Delivered Energy [1] kWh		Total $
January	1,923,940.5	1,913,497.7	$	199,099.44
February	1,874,545.0	1,865,497.4	$	194,105.00
March	2,280,714.8	2,271,856.6	$	236,386.70
April	2,571,346.6	2,563,423.7	$	266,724.24
May	3,009,839.7	3,002,429.4	$	312,402.78
June	2,392,519.5	2,387,006.5	$	248,368.03
July	2,503,864.0	2,495,191.5	$	259,624.68
August	2,359,625.3	2,350,539.5	$	244,573.64
September	2,399,623.5	2,263,265.6	$	235,492.79
October	2,311,747.3	2,239,040.4	$	232,972.15
November	1,887,422.3	1,877,067.5	$	195,308.87
December	1,827,227.0	1,816,098.1	$	188,965.01
Total	27,342,415.5	27,044,913.9	$	2,814,023.33

[1] Delivered energy equals gross production net of station power.

SunE EPE 2, LLC - Purchased Power Agreement

Source: SunE EPE2, LLC - Solar Statements

2024	RECs Purchased kWh	Delivered Energy [1] kWh		Total $
January	1,887,859.0	1,872,040.0	$	196,357.75
February	2,098,239.0	2,084,090.0	$	218,600.10
March	2,560,706.5	2,546,770.0	$	267,130.21
April	2,909,279.0	2,896,660.0	$	303,831.09
May	3,240,729.0	3,229,440.0	$	338,736.17
June	2,724,916.0	2,714,090.0	$	284,680.69
July	2,808,479.9	2,797,410.0	$	293,420.23
August	2,454,071.0	2,443,040.0	$	256,250.47
September	2,399,623.5	2,387,940.0	$	250,471.31
October	2,311,747.3	2,298,680.0	$	241,108.82
November	1,999,520.6	1,985,790.0	$	208,289.25
December	1,956,430.6	1,942,000.0	$	203,696.17
Total	29,351,601.4	29,197,950.0	$	3,062,572.26

[1] Delivered energy equals gross production net of station power.

longroad ENERGY

Invoice

Issued to:
Evan Evans
El Paso Electric
P.O. Box 982
El Paso, Texas 79960

2024 January
SunE1

Due on or Before: 03-06-2024
20 Business Days from
Invoice Date

Billing Period:
1/1/2024 - 1/31/2024

Invoice Number:
NM-10-0022-58

Invoice Date:
02-06-2024

Description	Generation (kWh)	Rate (USD/kWh)	Amount Due
Total Generation	1,913,497.7	0.10405	$199,099.44
		Subtotal	$199,099.44
		Total Due	**$199,099.44**

Payment Information:

[redacted]

Invoice Issued By:

SunE EPE1 LLC
c/o Longroad Energy
125 High Street, 17th Floor
High Street Tower, Suite 1705
Boston, MA 02210

Please include the invoice number as the payment reference. For questions, contact: ar@longroadenergy.com

*Please note outstanding balance information is not included on this invoice. If there is an outstanding balance on this account, Longroad will reach out separately.

Renewable Energy Certificate

Period: For the month of January 2024

Source of REC: Renewable Energy Provider

SunE EPE1, LLC

C/O Longroad Energy Services

125 High Street, 17th Floor High

Street Tower, Suite 1705

Boston, MA 02210

EPE – Chaparral

Contact:
Jennifer Vo
Asset Management
Longroad Energy Services
jennifer.vo@longroadenergy.com
(206) 580-5634

Generator Type Solar Photovoltaic

Nameplate Capacity 10.0 (in MW)

Date of generator start-up 6/25/2012

Fuel source Solar

Revenue meter manufacturer and identification/serial number

Landis+Gyr 75758963 166.140.252.220

Location of generator 1122 Luna Drive, Chaparral, NM

Renewable Energy Purchaser:

Interconnection Utility: El Paso Electric Company

Control Area Operator: El Paso Electric

EPE Contact:

Evan Evans

P.O. Box 982

El Paso, TX 79960

(915) 543-5995

Fax (915) 521-4729

Monthly Statement of Recs

Renewable Energy delivery for the month of January 2024

Energy Delivered

1,923,940.50 kWh

Weighted Value of Energy Delivered 1,913,497.7 kWh (multiply by RPS multiplier)

I, Jennifer Vo, herby certify that:

SUPPLIER CERTIFICATION

The energy produced, sold and delivered by SunE EPE1, LLC to El Paso Electric Company from these facilities is from a renewable energy source, as defined by the New Mexico Renewable Energy Act, NMSA 1978, Section 62-16-1 et seq. and the NMPRC Rule 572, Renewable Energy for Electric Utilities, 17.9.572 NMAC;

Each kilowatt hour of electricity is generated using a Solar fuel source, and

No other Renewable Energy Certificates associated with the renewable energy produced and delivered by SunE EPE1, LLC to El Paso Electric have been traded, sold, retired or otherwise transferred by SunE EPE1, LLC to any other person or entity.

By: Jennifer Vo

Jennifer Vo

Jennifer Vo
Asset Management
Date: 02/06/2024

longroad ENERGY

Invoice

Issued to:
Evan Evans
El Paso Electric
P.O. Box 982
El Paso, Texas 79960

2024 February

Due on or Before: 04-02-2024
20 Business Days from
Invoice Date

Billing Period:
2/1/2024 - 2/29/2024

Invoice Number:
NM-10-0022-59

Invoice Date:
03-05-2024

Description	Generation (kWh)	Rate (USD/kWh)	Amount Due
Total Generation	1,865,497.4	0.10405	$194,105.00
		Subtotal	$194,105.00
		Total Due	**$194,105.00**

Payment Information:

[redacted]

Invoice Issued By:

SunE EPE1 LLC
c/o Longroad Energy
125 High Street, 17th Floor
High Street Tower, Suite 1705
Boston, MA 02210

Please include the invoice number as the payment reference. For questions, contact: ar@longroadenergy.com

*Please note outstanding balance information is not included on this invoice. If there is an outstanding balance on this account, Longroad will reach out separately.

Renewable Energy Certificate

Period: For the month of February 2024

Source of REC: Renewable Energy Provider

SunE EPE1, LLC

C/O Longroad Energy Services

125 High Street, 17th Floor High

Street Tower, Suite 1705

Boston, MA 02210

EPE – Chaparral

Contact:
Jennifer Vo
Asset Management
Longroad Energy Services
jennifer.vo@longroadenergy.com
(206) 580-5634

Generator Type Solar Photovoltaic

Nameplate Capacity 10.0 (in MW)

Date of generator start-up 6/25/2012

Fuel source Solar

Revenue meter manufacturer and identification/serial number

Landis+Gyr 75758963 166.140.252.220

Location of generator 1122 Luna Drive, Chaparral, NM

Renewable Energy Purchaser:

Interconnection Utility: El Paso Electric Company

Control Area Operator: El Paso Electric

EPE Contact:

Evan Evans

P.O. Box 982

El Paso, TX 79960

(915) 543-5995

Fax (915) 521-4729

Monthly Statement of Recs

Renewable Energy delivery for the month of February 2024

Energy Delivered

1,874,545.00 kWh

Weighted Value of Energy Delivered 1,865,497.40 kWh (multiply by RPS multiplier)

I, Jennifer Vo, herby certify that:

SUPPLIER CERTIFICATION

The energy produced, sold and delivered by SunE EPE1, LLC to El Paso Electric Company from these facilities is from a renewable energy source, as defined by the New Mexico Renewable Energy Act, NMSA 1978, Section 62-16-1 et seq. and the NMPRC Rule 572, Renewable Energy for Electric Utilities, 17.9.572 NMAC;

Each kilowatt hour of electricity is generated using a Solar fuel source, and

No other Renewable Energy Certificates associated with the renewable energy produced and delivered by SunE EPE1, LLC to El Paso Electric have been traded, sold, retired or otherwise transferred by SunE EPE1, LLC to any other person or entity.

By: Jennifer Vo

Jennifer Vo

Jennifer Vo
Asset Management
Date: 03/05/2024

longroad ENERGY

2024 March

Invoice

Issued to:
Evan Evans
El Paso Electric
P.O. Box 982
El Paso, Texas 79960

Due on or Before: 05-01-2024
20 Business Days from
Invoice Date

Billing Period:
3/1/2024 - 3/31/2024

Invoice Number:
NM-10-0022-60

Invoice Date:
04-03-2024

Description	Generation (kWh)	Rate (USD/kWh)	Amount Due
Total Generation	2,271,856.60	0.10405	$236,386.70
		Subtotal	$236,386.70
		Total Due	**$236,386.70**

Payment Information:

[redacted]

Invoice Issued By:

SunE EPE1 LLC
c/o Longroad Energy
125 High Street, 17th Floor
High Street Tower, Suite 1705
Boston, MA 02110

Please include the invoice number as the payment reference. For questions, contact: ar@longroadenergy.com

*Please note outstanding balance information is not included on this invoice. If there is an outstanding balance on this account, Longroad will reach out separately.

Renewable Energy Certificate

Period: For the month of March 2024

Source of REC: Renewable Energy Provider

SunE EPE1, LLC

C/O Longroad Energy Services

125 High Street, 17th Floor High

Street Tower, Suite 1705

Boston, MA 02210

EPE – Chaparral

Contact:
Jennifer Vo
Asset Management
Longroad Energy Services
jennifer.vo@longroadenergy.com
(206) 580-5634

Generator Type Solar Photovoltaic

Nameplate Capacity 10.0 (in MW)

Date of generator start-up 6/25/2012

Fuel source Solar

Revenue meter manufacturer and identification/serial number

Landis+Gyr 75758963 166.140.252.220

Location of generator 1122 Luna Drive, Chaparral, NM

Renewable Energy Purchaser:

Interconnection Utility: El Paso Electric Company

Control Area Operator: El Paso Electric

EPE Contact:

Evan Evans

P.O. Box 982

El Paso, TX 79960

(915) 543-5995

Fax (915) 521-4729

Monthly Statement of Recs

Renewable Energy delivery for the month of March 2024

Energy Delivered

2,280,714.80 kWh

Weighted Value of Energy Delivered 2,271,856.60 kWh (multiply by RPS multiplier)

I, Jennifer Vo, herby certify that:

SUPPLIER CERTIFICATION

The energy produced, sold and delivered by SunE EPE1, LLC to El Paso Electric Company from these facilities is from a renewable energy source, as defined by the New Mexico Renewable Energy Act, NMSA 1978, Section 62-16-1 et seq. and the NMPRC Rule 572, Renewable Energy for Electric Utilities, 17.9.572 NMAC;

Each kilowatt hour of electricity is generated using a Solar fuel source, and

No other Renewable Energy Certificates associated with the renewable energy produced and delivered by SunE EPE1, LLC to El Paso Electric have been traded, sold, retired or otherwise transferred by SunE EPE1, LLC to any other person or entity.

By: Jennifer Vo

Jennifer Vo

Jennifer Vo
Asset Management
Date: 04/03/2024

longroad ENERGY

2024 April

Invoice

Issued to:
Evan Evans
El Paso Electric
P.O. Box 982
El Paso, Texas 79960

Due on or Before: 05-31-2024
20 Business Days from
Invoice Date

Billing Period:
4/1/2024 - 4/30/2024

Invoice Number:
NM-10-0022-61

Invoice Date:
05-03-2024

Description	Generation (kWh)	Rate (USD/kWh)	Amount Due
Total Generation	2,563,423.70	0.10405	$266,724.24
		Subtotal	$266,724.24
		Total Due	**$266,724.24**

Payment Information:

[redacted]

Invoice Issued By:

SunE EPE1 LLC
c/o Longroad Energy
125 High Street, 17th Floor
High Street Tower, Suite 1705
Boston, MA 02110

Please include the invoice number as the payment reference. For questions, contact: ar@longroadenergy.com

*Please note outstanding balance information is not included on this invoice. If there is an outstanding balance on this account, Longroad will reach out separately.

Renewable Energy Certificate

Period: For the month of April 2024

Source of REC: Renewable Energy Provider

SunE EPE1, LLC

C/O Longroad Energy Services

125 High Street, 17th Floor High

Street Tower, Suite 1705

Boston, MA 02210

EPE – Chaparral

Contact:
Jennifer Vo
Asset Management
Longroad Energy Services
jennifer.vo@longroadenergy.com
(206) 580-5634

Generator Type Solar Photovoltaic

Nameplate Capacity 10.0 (in MW)

Date of generator start-up 6/25/2012

Fuel source Solar

Revenue meter manufacturer and identification/serial number

Landis+Gyr 75758963 166.140.252.220

Location of generator 1122 Luna Drive, Chaparral, NM

Renewable Energy Purchaser:

Interconnection Utility: El Paso Electric Company

Control Area Operator: El Paso Electric

EPE Contact:

Evan Evans

P.O. Box 982

El Paso, TX 79960

(915) 543-5995

Fax (915) 521-4729

Monthly Statement of Recs

Renewable Energy delivery for the month of April 2024

Energy Delivered

2,571,346.6 kWh

Weighted Value of Energy Delivered 2,563,423.70 kWh (multiply by RPS multiplier)

I, Jennifer Vo, herby certify that:

SUPPLIER CERTIFICATION

The energy produced, sold and delivered by SunE EPE1, LLC to El Paso Electric Company from these facilities is from a renewable energy source, as defined by the New Mexico Renewable Energy Act, NMSA 1978, Section 62-16-1 et seq. and the NMPRC Rule 572, Renewable Energy for Electric Utilities, 17.9.572 NMAC;

Each kilowatt hour of electricity is generated using a Solar fuel source, and

No other Renewable Energy Certificates associated with the renewable energy produced and delivered by SunE EPE1, LLC to El Paso Electric have been traded, sold, retired or otherwise transferred by SunE EPE1, LLC to any other person or entity.

By: Jennifer Vo

Jennifer Vo

Jennifer Vo
Asset Management
Date: 05/03/2024

longroad ENERGY

Invoice

Issued to:
Evan Evans
El Paso Electric
P.O. Box 982
El Paso, Texas 79960

Due on or Before: 07-08-2024
20 Business Days from
Invoice Date

Billing Period:
5/1/2024 - 5/31/2024

Invoice Number:
NM-10-0022-61

Invoice Date:
06-06-2024

Description	Generation (kWh)	Rate (USD/kWh)	Amount Due
Total Generation	3,002,429.4	0.10405	$312,402.78
		Subtotal	$312,402.78
		Total Due	**$312,402.78**

Payment Information:

[redacted]

Invoice Issued By:

SunE EPE1 LLC
c/o Longroad Energy
125 High Street, 17th Floor
High Street Tower, Suite 1705
Boston, MA 02110

Banking information is provided for reference only. No change to bank account information is valid unless delivered in accordance with the Notice of Payment Instruction Change Process, sent separately. All bank account changes must be approved by a Longroad Authorized Verifier and verified via test wire and call back.

Please include the invoice number as the payment reference. For questions, contact: ar@longroadenergy.com

*Please note outstanding balance information is not included on this invoice. If there is an outstanding balance on this account, Longroad will reach out separately.

Renewable Energy Certificate

Period: For the month of May 2024

Source of REC: Renewable Energy Provider

SunE EPE1, LLC

C/O Longroad Energy Services

125 High Street, 17th Floor High

Street Tower, Suite 1705

Boston, MA 02210

EPE – Chaparral

Contact:
Jennifer Vo
Asset Management
Longroad Energy Services
jennifer.vo@longroadenergy.com
(206) 580-5634

Generator Type Solar Photovoltaic

Nameplate Capacity 10.0 (in MW)

Date of generator start-up 6/25/2012

Fuel source Solar

Revenue meter manufacturer and identification/serial number

Landis+Gyr 75758963 166.140.252.220

Location of generator 1122 Luna Drive, Chaparral, NM

Renewable Energy Purchaser:

Interconnection Utility: El Paso Electric Company

Control Area Operator: El Paso Electric

EPE Contact:

Evan Evans

P.O. Box 982

El Paso, TX 79960

(915) 543-5995

Fax (915) 521-4729

Monthly Statement of Recs

Renewable Energy delivery for the month of May 2024

Energy Delivered

3,009,839.7 kWh

Weighted Value of Energy Delivered 3,002,429.4 kWh (multiply by RPS multiplier)

I, Jennifer Vo, herby certify that:

SUPPLIER CERTIFICATION

The energy produced, sold and delivered by SunE EPE1, LLC to El Paso Electric Company from these facilities is from a renewable energy source, as defined by the New Mexico Renewable Energy Act, NMSA 1978, Section 62-16-1 et seq. and the NMPRC Rule 572, Renewable Energy for Electric Utilities, 17.9.572 NMAC;

Each kilowatt hour of electricity is generated using a Solar fuel source, and

No other Renewable Energy Certificates associated with the renewable energy produced and delivered by SunE EPE1, LLC to El Paso Electric have been traded, sold, retired or otherwise transferred by SunE EPE1, LLC to any other person or entity.

By: Jennifer Vo

Jennifer Vo

Jennifer Vo
Asset Management
Date: 06/05/2024

longroad ENERGY

2024 June

Invoice

Issued to:
Evan Evans
El Paso Electric
P.O. Box 982
El Paso, Texas 79960

Due on or Before: 08-01-2024
20 Business Days from
Invoice Date

Billing Period:
6/1/2024 - 6/30/2024

Invoice Number:
NM-10-0022-62

Invoice Date:
07-03-2024

Description	Generation (kWh)	Rate (USD/kWh)	Amount Due
Total Generation	2,387,006.5	0.10405	$248,368.03
		Subtotal	$248,368.03
		Total Due	**$248,368.03**

Payment Information:

[redacted]

Invoice Issued By:

SunE EPE1 LLC
c/o Longroad Energy
125 High Street, 17th Floor
High Street Tower, Suite 1705
Boston, MA 02110

Banking information is provided for reference only. No change to bank account information is valid unless delivered in accordance with the Notice of Payment Instruction Change Process, sent separately. All bank account changes must be approved by a Longroad Authorized Verifier and verified via test wire and call back.

Please include the invoice number as the payment reference. For questions, contact: ar@longroadenergy.com

*Please note outstanding balance information is not included on this invoice. If there is an outstanding balance on this account, Longroad will reach out separately.

Renewable Energy Certificate

Period: For the month of June 2024

Source of REC: Renewable Energy Provider

SunE EPE1, LLC

C/O Longroad Energy Services

125 High Street, 17th Floor High

Street Tower, Suite 1705

Boston, MA 02210

EPE – Chaparral

Contact:
Jennifer Vo
Asset Management
Longroad Energy Services
jennifer.vo@longroadenergy.com
(206) 580-5634

Generator Type Solar Photovoltaic

Nameplate Capacity 10.0 (in MW)

Date of generator start-up 6/25/2012

Fuel source Solar

Revenue meter manufacturer and identification/serial number

Landis+Gyr 75758963 166.140.252.220

Location of generator 1122 Luna Drive, Chaparral, NM

Renewable Energy Purchaser:

Interconnection Utility: El Paso Electric Company

Control Area Operator: El Paso Electric

EPE Contact:

Evan Evans

P.O. Box 982

El Paso, TX 79960

(915) 543-5995

Fax (915) 521-4729

Monthly Statement of Recs

Renewable Energy delivery for the month of June 2024

Energy Delivered

2,392,519.5 kWh

Weighted Value of Energy Delivered 2,387,006.5 kWh (multiply by RPS multiplier)

I, Jennifer Vo, herby certify that:

SUPPLIER CERTIFICATION

The energy produced, sold and delivered by SunE EPE1, LLC to El Paso Electric Company from these facilities is from a renewable energy source, as defined by the New Mexico Renewable Energy Act, NMSA 1978, Section 62-16-1 et seq. and the NMPRC Rule 572, Renewable Energy for Electric Utilities, 17.9.572 NMAC;

Each kilowatt hour of electricity is generated using a Solar fuel source, and

No other Renewable Energy Certificates associated with the renewable energy produced and delivered by SunE EPE1, LLC to El Paso Electric have been traded, sold, retired or otherwise transferred by SunE EPE1, LLC to any other person or entity.

By: Jennifer Vo

Jennifer Vo

Jennifer Vo
Asset Management
Date: 07/03/2024

longroad ENERGY

2024 July

Invoice

Issued to:
Evan Evans
El Paso Electric
P.O. Box 982
El Paso, Texas 79960

Due on or Before: 09-03-2024
20 Business Days from
Invoice Date

Billing Period:
7/1/2024 - 7/31/2024

Invoice Number:
NM-10-0022-63

Invoice Date:
08-06-2024

Description	Generation (kWh)	Rate (USD/kWh)	Amount Due
Total Generation	2,495,191.5	0.10405	$259,624.68
		Subtotal	$259,624.68
		Total Due	**$259,624.68**

Payment Information:

[redacted]

Invoice Issued By:

SunE EPE1 LLC
c/o Longroad Energy
125 High Street, 17th Floor
High Street Tower, Suite 1705
Boston, MA 02110

Banking information is provided for reference only. No change to bank account information is valid unless delivered in accordance with the Notice of Payment Instruction Change Process, sent separately. All bank account changes must be approved by a Longroad Authorized Verifier and verified via test wire and call back.

Please include the invoice number as the payment reference. For questions, contact: ar@longroadenergy.com

*Please note outstanding balance information is not included on this invoice. If there is an outstanding balance on this account, Longroad will reach out separately.

Renewable Energy Certificate

Period: For the month of July 2024

Source of REC: Renewable Energy Provider

SunE EPE1, LLC

C/O Longroad Energy Services

125 High Street, 17th Floor High

Street Tower, Suite 1705

Boston, MA 02110

EPE – Chaparral

Contact:
Jennifer Vo
Asset Management
Longroad Energy Services
jennifer.vo@longroadenergy.com
(206) 580-5634

Generator Type Solar Photovoltaic

Nameplate Capacity 10.0 (in MW)

Date of generator start-up 6/25/2012

Fuel source Solar

Revenue meter manufacturer and identification/serial number

Landis+Gyr 75758963 166.140.252.220

Location of generator 1122 Luna Drive, Chaparral, NM

Renewable Energy Purchaser:

Interconnection Utility: El Paso Electric Company

Control Area Operator: El Paso Electric

EPE Contact:

Evan Evans

P.O. Box 982

El Paso, TX 79960

(915) 543-5995

Fax (915) 521-4729

Monthly Statement of Recs

Renewable Energy delivery for the month of July 2024

Energy Delivered

2,503,864.0 kWh

Weighted Value of Energy Delivered 2,495,191.5 kWh (multiply by RPS multiplier)

I, Jennifer Vo, herby certify that:

SUPPLIER CERTIFICATION

The energy produced, sold and delivered by SunE EPE1, LLC to El Paso Electric Company from these facilities is from a renewable energy source, as defined by the New Mexico Renewable Energy Act, NMSA 1978, Section 62-16-1 et seq. and the NMPRC Rule 572, Renewable Energy for Electric Utilities, 17.9.572 NMAC;

Each kilowatt hour of electricity is generated using a Solar fuel source, and

No other Renewable Energy Certificates associated with the renewable energy produced and delivered by SunE EPE1, LLC to El Paso Electric have been traded, sold, retired or otherwise transferred by SunE EPE1, LLC to any other person or entity.

By: Jennifer Vo

Jennifer Vo

Jennifer Vo
Asset Management
Date: 08/05/2024

longroad ENERGY

Invoice

Issued to:
Evan Evans
El Paso Electric
P.O. Box 982
El Paso, Texas 79960

Due on or Before: 10-02-2024
20 Business Days from
Invoice Date

Billing Period:
8/1/2024 - 8/31/2024

Invoice Number:
NM-10-0022-64

Invoice Date:
09-04-2024

Description	Generation (kWh)	Rate (USD/kWh)	Amount Due
Total Generation	2,350,539.5	0.10405	$244,573.64
		Subtotal	$244,573.64
		Total Due	**$244,573.64**

Payment Information:

[redacted]

Invoice Issued By:

SunE EPE1 LLC
c/o Longroad Energy
125 High Street, 17th Floor
High Street Tower, Suite 1705
Boston, MA 02110

Banking information is provided for reference only. No change to bank account information is valid unless delivered in accordance with the Notice of Payment Instruction Change Process, sent separately. All bank account changes must be approved by a Longroad Authorized Verifier and verified via test wire and call back.

Please include the invoice number as the payment reference. For questions, contact: ar@longroadenergy.com

*Please note outstanding balance information is not included on this invoice. If there is an outstanding balance on this account, Longroad will reach out separately.

Renewable Energy Certificate

Period: For the month of August 2024

Source of REC: Renewable Energy Provider

SunE EPE1, LLC

C/O Longroad Energy Services

125 High Street, 17th Floor High

Street Tower, Suite 1705

Boston, MA 02110

EPE – Chaparral

Contact:
Jennifer Vo
Asset Management
Longroad Energy Services
jennifer.vo@longroadenergy.com
(206) 580-5634

Generator Type Solar Photovoltaic

Nameplate Capacity 10.0 (in MW)

Date of generator start-up 6/25/2012

Fuel source Solar

Revenue meter manufacturer and identification/serial number

Landis+Gyr 75758963 166.140.252.220

Location of generator 1122 Luna Drive, Chaparral, NM

Renewable Energy Purchaser:

Interconnection Utility: El Paso Electric Company

Control Area Operator: El Paso Electric

EPE Contact:

Evan Evans

P.O. Box 982

El Paso, TX 79960

(915) 543-5995

Fax (915) 521-4729

Monthly Statement of Recs

Renewable Energy delivery for the month of August 2024

Energy Delivered

2,359,625.3 kWh

Weighted Value of Energy Delivered 2,350,539.5 kWh (multiply by RPS multiplier)

I, Jennifer Vo, herby certify that:

SUPPLIER CERTIFICATION

The energy produced, sold and delivered by SunE EPE1, LLC to El Paso Electric Company from these facilities is from a renewable energy source, as defined by the New Mexico Renewable Energy Act, NMSA 1978, Section 62-16-1 et seq. and the NMPRC Rule 572, Renewable Energy for Electric Utilities, 17.9.572 NMAC;

Each kilowatt hour of electricity is generated using a Solar fuel source, and

No other Renewable Energy Certificates associated with the renewable energy produced and delivered by SunE EPE1, LLC to El Paso Electric have been traded, sold, retired or otherwise transferred by SunE EPE1, LLC to any other person or entity.

By: Jennifer Vo

Jennifer Vo

Jennifer Vo
Asset Management
Date: 09/04/2024

longroad ENERGY

2024 September

Invoice

Issued to:
Evan Evans
El Paso Electric
P.O. Box 982
El Paso, Texas 79960

Due on or Before: 11-08-2024
20 Business Days from
Invoice Date

Billing Period:
9/1/2024 - 9/30/2024

Invoice Number:
NM-10-0022-65

Invoice Date:
10-08-2024

Description	Generation (kWh)	Rate (USD/kWh)	Amount Due
Total Generation	2,263,265.6	0.10405	$235,492.79
		Subtotal	$235,492.79
		Total Due	**$235,492.79**

Payment Information:

[redacted]

Invoice Issued By:

SunE EPE1 LLC
c/o Longroad Energy
125 High Street, 17th Floor
High Street Tower, Suite 1705
Boston, MA 02110

Banking information is provided for reference only. No change to bank account information is valid unless delivered in accordance with the Notice of Payment Instruction Change Process, sent separately. All bank account changes must be approved by a Longroad Authorized Verifier and verified via test wire and call back.

Please include the invoice number as the payment reference. For questions, contact: ar@longroadenergy.com

*Please note outstanding balance information is not included on this invoice. If there is an outstanding balance on this account, Longroad will reach out separately.

RENEWABLE ENERGY CERTIFICATE

Period: For the month of 09/01/2024

Source of REC: Renewable Energy Provider

SunE EPE2, LLC
C/O Silicon Ranch Corporation
222 2nd Ave South, Suite 1900
Nashville, Tennessee 37201
EPE - Las Cruces Industrial

Contact:
Dylan Sontag
O&M Manager
C/O Silicon Ranch Corporation
222 2nd Ave South, Suite 1900
Nashville, Tennessee 37201
dylan.sontag@siliconranchcorp.com

Generator Type: Solar Photovoltaic

Nameplate Capacity: 13.625 (in MW)

Date of generator start-up: 5/2/2012

Fuel source: Solar

Revenue meter manufacturer and indentification/serial number
1075758965

Location of generator: Crawford Blvd, Las Cruces, NM 88007

Renewable Energy Purchaser

Interconnection Utility: El Paso Electric Company

Control Area Operator: El Paso Electric

EPE Contact:
Evan Evans
P.O. Box 982
El Paso, TX 79960
(915) 543-5995
Fax (915) 521-4729

MONTHLY STATEMENT OF RECS

Renewable Energy delivery for the month of: 09/01/2024

Energy Delivered: 2,399,623.48 KWH

Weighted Value of Energy Delivered: 2,399,623.48 kWh (multiply by RPS multiplier)

SUPPLIER CERTIFICATION

I, Dylan Sontag herby certify that:

The energy produced, sold and delivered by SunE EPE2, LLC to El Paso Electric Company from these facilities is from a renewable energy source, as defined by the New Mexico Renewable Energy Act, NMSA 1978, Section 62-16-1 et seq. and the NMPRC Rule 572, Renewable Energy for Electric Utilities, 17.9.572 NMAC;

Each kilowatt hour of electricity is generated using a Solar fuel source, and

No other Renewable Energy Certificates associated with the renewable energy produced and delivered by SunE EPE2, LLC to El Paso Electric have been traded, sold, retired or otherwise transferred by SunE EPE2, LLC to any other person or entity.

By:

Dylan Sontag - Director, Asset Operations and Performance Engineering

10/07/2024
Date

longroad ENERGY

2024 October

Invoice

Issued to:
Evan Evans
El Paso Electric
P.O. Box 982
El Paso, Texas 79960

Due on or Before: 12-10-2024
20 Business Days from
Invoice Date

Billing Period:
10/1/2024 - 10/31/2024

Invoice Number:
NM-10-0022-66

Invoice Date:
11-11-2024

Description	Generation (kWh)	Rate (USD/kWh)	Amount Due
Total Generation	2,239,040.4	0.10405	$232,972.15
		Subtotal	$232,972.15
		Total Due	**$232,972.15**

Payment Information:

[redacted]

Invoice Issued By:

SunE EPE1 LLC
c/o Longroad Energy
125 High Street, 17th Floor
High Street Tower, Suite 1705
Boston, MA 02110

Banking information is provided for reference only. No change to bank account information is valid unless delivered in accordance with the Notice of Payment Instruction Change Process, sent separately. All bank account changes must be approved by a Longroad Authorized Verifier and verified via test wire and call back.

Please include the invoice number as the payment reference. For questions, contact: ar@longroadenergy.com

*Please note outstanding balance information is not included on this invoice. If there is an outstanding balance on this account, Longroad will reach out separately.

RENEWABLE ENERGY CERTIFICATE

Period: For the month of 10/01/2024

Source of REC: Renewable Energy Provider

SunE EPE2, LLC
C/O Silicon Ranch Corporation
222 2nd Ave South, Suite 1900
Nashville, Tennessee 37201
EPE - Las Cruces Industrial

Contact:
Dylan Sontag
O&M Manager
C/O Silicon Ranch Corporation
222 2nd Ave South, Suite 1900
Nashville, Tennessee 37201
dylan.sontag@siliconranchcorp.com

Generator Type: Solar Photovoltaic

Nameplate Capacity: 13.625 (in MW)

Date of generator start-up: 5/2/2012

Fuel source: Solar

Revenue meter manufacturer and indentification/serial number
1075758965

Location of generator: Crawford Blvd, Las Cruces, NM 88007

Renewable Energy Purchaser

Interconnection Utility: El Paso Electric Company

Control Area Operator: El Paso Electric

EPE Contact:
Evan Evans
P.O. Box 982
El Paso, TX 79960
(915) 543-5995
Fax (915) 521-4729

MONTHLY STATEMENT OF RECS

Renewable Energy delivery for the month of: 10/01/2024

Energy Delivered: 2,311,747.30 KWH

Weighted Value of Energy Delivered: 2,311,747.30 kWh (multiply by RPS multiplier)

SUPPLIER CERTIFICATION

I, Dylan Sontag herby certify that:

The energy produced, sold and delivered by SunE EPE2, LLC to El Paso Electric Company from these facilities is from a renewable energy source, as defined by the New Mexico Renewable Energy Act, NMSA 1978, Section 62-16-1 et seq. and the NMPRC Rule 572, Renewable Energy for Electric Utilities, 17.9.572 NMAC;

Each kilowatt hour of electricity is generated using a Solar fuel source, and

No other Renewable Energy Certificates associated with the renewable energy produced and delivered by SunE EPE2, LLC to El Paso Electric have been traded, sold, retired or otherwise transferred by SunE EPE2, LLC to any other person or entity.

By:

Dylan Sontag - Director, Asset Operations and Performance Engineering

11/07/2024
Date

longroad ENERGY

2024 November

Invoice

Issued to:
Evan Evans
El Paso Electric
P.O. Box 982
El Paso, Texas 79960

Due on or Before: 01-06-2025
20 Business Days from
Invoice Date

Billing Period:
11/1/2024 - 11/30/2024

Invoice Number:
NM-10-0022-67

Invoice Date:
12-05-2024

Description	Generation (kWh)	Rate (USD/kWh)	Amount Due
Total Generation	1,877,067.5	0.10405	$195,308.87
		Subtotal	$195,308.87
		Total Due	**$195,308.87**

Payment Information:

[redacted]

Invoice Issued By:

SunE EPE1 LLC
c/o Longroad Energy
125 High Street, 17th Floor
High Street Tower, Suite 1705
Boston, MA 02110

Banking information is provided for reference only. No change to bank account information is valid unless delivered in accordance with the Notice of Payment Instruction Change Process, sent separately. All bank account changes must be approved by a Longroad Authorized Verifier and verified via test wire and call back.

Please include the invoice number as the payment reference. For questions, contact: ar@longroadenergy.com

*Please note outstanding balance information is not included on this invoice. If there is an outstanding balance on this account, Longroad will reach out separately.

Renewable Energy Certificate

Period: For the month of November 2024

Source of REC: Renewable Energy Provider

SunE EPE1, LLC

C/O Longroad Energy Services

125 High Street, 17th Floor High

Street Tower, Suite 1705

Boston, MA 02110

EPE – Chaparral

Contact:
Jennifer Vo
Asset Management
Longroad Energy Services
jennifer.vo@longroadenergy.com
(206) 580-5634

Generator Type Solar Photovoltaic

Nameplate Capacity 10.0 (in MW)

Date of generator start-up 6/25/2012

Fuel source Solar

Revenue meter manufacturer and identification/serial number

Landis+Gyr 75758963 166.140.252.220

Location of generator 1122 Luna Drive, Chaparral, NM

Renewable Energy Purchaser:

Interconnection Utility: El Paso Electric Company

Control Area Operator: El Paso Electric

EPE Contact:

Evan Evans

P.O. Box 982

El Paso, TX 79960

(915) 543-5995

Fax (915) 521-4729

Monthly Statement of Recs

Renewable Energy delivery for the month of November 2024

Energy Delivered

1,887,422.3 kWh

Weighted Value of Energy Delivered 1,877,067.5 kWh (multiply by RPS multiplier)

I, Jennifer Vo, herby certify that:

SUPPLIER CERTIFICATION

The energy produced, sold and delivered by SunE EPE1, LLC to El Paso Electric Company from these facilities is from a renewable energy source, as defined by the New Mexico Renewable Energy Act, NMSA 1978, Section 62-16-1 et seq. and the NMPRC Rule 572, Renewable Energy for Electric Utilities, 17.9.572 NMAC;

Each kilowatt hour of electricity is generated using a Solar fuel source, and

No other Renewable Energy Certificates associated with the renewable energy produced and delivered by SunE EPE1, LLC to El Paso Electric have been traded, sold, retired or otherwise transferred by SunE EPE1, LLC to any other person or entity.

By: Jennifer Vo

Jennifer Vo

Jennifer Vo
Asset Management
Date: 12/05/2024

longroad ENERGY

2024 December

Invoice

Issued to:
Evan Evans
El Paso Electric
P.O. Box 982
El Paso, Texas 79960

Due on or Before: 02-04-2025
20 Business Days from
Invoice Date

Billing Period:
12/1/2024 - 12/31/2024

Invoice Number:
NM-10-0022-68

Invoice Date:
01-06-2025

Description	Generation (kWh)	Rate (USD/kWh)	Amount Due
Total Generation	1,816,098.1	0.10405	$188,965.01
		Subtotal	$188,965.01
		Total Due	**$188,965.01**

Payment Information:

[redacted]

Invoice Issued By:

SunE EPE1 LLC
c/o Longroad Energy
125 High Street, 17th Floor
High Street Tower, Suite 1705
Boston, MA 02110

Banking information is provided for reference only. No change to bank account information is valid unless delivered in accordance with the Notice of Payment Instruction Change Process, sent separately. All bank account changes must be approved by a Longroad Authorized Verifier and verified via test wire and call back.

Please include the invoice number as the payment reference. For questions, contact: ar@longroadenergy.com

*Please note outstanding balance information is not included on this invoice. If there is an outstanding balance on this account, Longroad will reach out separately.

Renewable Energy Certificate

Period: For the month of December 2024

Source of REC: Renewable Energy Provider

SunE EPE1, LLC

C/O Longroad Energy Services

125 High Street, 17th Floor High

Street Tower, Suite 1705

Boston, MA 02110

EPE – Chaparral

Contact:
Jennifer Vo
Asset Management
Longroad Energy Services
jennifer.vo@longroadenergy.com
(206) 580-5634

Generator Type Solar Photovoltaic

Nameplate Capacity 10.0 (in MW)

Date of generator start-up 6/25/2012

Fuel source Solar

Revenue meter manufacturer and identification/serial number

Landis+Gyr 75758963 166.140.252.220

Location of generator 1122 Luna Drive, Chaparral, NM

Renewable Energy Purchaser:

Interconnection Utility: El Paso Electric Company

Control Area Operator: El Paso Electric

EPE Contact:

Evan Evans

P.O. Box 982

El Paso, TX 79960

(915) 543-5995

Fax (915) 521-4729

Monthly Statement of Recs

Renewable Energy delivery for the month of December 2024

Energy Delivered

1,827,227.0 kWh

Weighted Value of Energy Delivered 1,816,098.1 kWh (multiply by RPS multiplier)

I, Jennifer Vo, herby certify that:

SUPPLIER CERTIFICATION

The energy produced, sold and delivered by SunE EPE1, LLC to El Paso Electric Company from these facilities is from a renewable energy source, as defined by the New Mexico Renewable Energy Act, NMSA 1978, Section 62-16-1 et seq. and the NMPRC Rule 572, Renewable Energy for Electric Utilities, 17.9.572 NMAC;

Each kilowatt hour of electricity is generated using a Solar fuel source, and

No other Renewable Energy Certificates associated with the renewable energy produced and delivered by SunE EPE1, LLC to El Paso Electric have been traded, sold, retired or otherwise transferred by SunE EPE1, LLC to any other person or entity.

By: Jennifer Vo

Jennifer Vo

Jennifer Vo
Asset Management
Date: 01/06/2025

SunE EPE 2, LLC - Purchased Power Agreement

Source: SunE EPE2, LLC - Solar Statements

2024	RECs Purchased kWh	Delivered Energy [1] kWh		Total $
January	1,887,859.0	1,872,040.0	$	196,357.75
February	2,098,239.0	2,084,090.0	$	218,600.10
March	2,560,706.5	2,546,770.0	$	267,130.21
April	2,909,279.0	2,896,660.0	$	303,831.09
May	3,240,729.0	3,229,440.0	$	338,736.17
June	2,724,916.0	2,714,090.0	$	284,680.69
July	2,808,479.9	2,797,410.0	$	293,420.23
August	2,454,071.0	2,443,040.0	$	256,250.47
September	2,399,623.5	2,387,940.0	$	250,471.31
October	2,311,747.3	2,298,680.0	$	241,108.82
November	1,999,520.6	1,985,790.0	$	208,289.25
December	1,956,430.6	1,942,000.0	$	203,696.17
Total	29,351,601.4	29,197,950.0	$	3,062,572.26

[1] Delivered energy equals gross production net of station power.

SILICON RANCH

2024 January
SunE 2

Bill From
SunE EPE2, LLC
222 Second Avenue South
Suite 1900
Nashville TN 37201

Bill To:
El Paso Electric Company
NM - EPE - Las Cruces
PO Box 982
El Paso TX 79960

Ship To:
NM - EPE - Las Cruces
SunE EPE2 LLC Crawford Blvd L
Las Cruces NM 88007

Invoice	INV00013621
Invoice Date	2/8/2024
Term	Net 30
Due Date	3/9/2024
Site:	
Project #	NM-10-0014
Project	NM - EPE - Las Cruces
Meter Number	

Charge Detail

Description	Period From	Period To	Quantity	Unit	Unit Price	Amount (USD)
Solar Generation Fee: Non-Rated Generation	1/1/2024	1/31/2024	1,872.04	MWH	$104.89	$196,357.75

Thank you for your business!

Current Charges	$196,357.75
Tax	$0.00
Total	**$196,357.75**

Payment Instructions

Wire Funds to the following account:	Send ACH payments to the below Account	Make checks payable to	SunE EPE2, LLC
[redacted]	[redacted]	[redacted]	

For questions about this invoice, please contact Accounts Receivable at receivables@siliconranchcorp.com or at (615) 577-4786.
For questions about your service, please contact Dylan Sontag at Dylan.Sontag@Siliconranchcorp.com.

For additional information, refer to next page.

* Tax is included on invoices for transactions in states where tax is imposed on sales of electricity unless customer provides a proper exemption certificate.

RENEWABLE ENERGY CERTIFICATE

Period: For the month of 01/01/2024

Source of REC: Renewable Energy Provider

SunE EPE2, LLC
C/O Silicon Ranch Corporation
222 2nd Ave South, Suite 1900
Nashville, Tennessee 37201
EPE - Las Cruces Industrial

Contact:
Dylan Sontag
O&M Manager
C/O Silicon Ranch Corporation
222 2nd Ave South, Suite 1900
Nashville, Tennessee 37201
dylan.sontag@siliconranchcorp.com

Generator Type: Solar Photovoltaic

Nameplate Capacity: 13.625 (in MW)

Date of generator start-up: 5/2/2012

Fuel source: Solar

Revenue meter manufacturer and indentification/serial number
1075758965

Location of generator: Crawford Blvd, Las Cruces, NM 88007

Renewable Energy Purchaser

Interconnection Utility: El Paso Electric Company

Control Area Operator: El Paso Electric

EPE Contact:
Evan Evans
P.O. Box 982
El Paso, TX 79960
(915) 543-5995
Fax (915) 521-4729

MONTHLY STATEMENT OF RECS

Renewable Energy delivery for the month of: 01/01/2024

Energy Delivered: 1,887,859.00 KWH

Weighted Value of Energy Delivered: 1,887,859.00 kWh (multiply by RPS multiplier)

SUPPLIER CERTIFICATION

I, Dylan Sontag herby certify that:

The energy produced, sold and delivered by SunE EPE2, LLC to El Paso Electric Company from these facilities is from a renewable energy source, as defined by the New Mexico Renewable Energy Act, NMSA 1978, Section 62-16-1 et seq. and the NMPRC Rule 572, Renewable Energy for Electric Utilities, 17.9.572 NMAC;

Each kilowatt hour of electricity is generated using a Solar fuel source, and

No other Renewable Energy Certificates associated with the renewable energy produced and delivered by SunE EPE2, LLC to El Paso Electric have been traded, sold, retired or otherwise transferred by SunE EPE2, LLC to any other person or entity.

By:

Dylan Sontag - Director, Asset Operations and Performance Engineering

02/08/2024
Date

SILICON RANCH

2024 February

Bill From
SunE EPE2, LLC
222 Second Avenue South
Suite 1900
Nashville TN 37201

Bill To:
El Paso Electric Company
NM - EPE - Las Cruces
PO Box 982
El Paso TX 79960

Ship To:
NM - EPE - Las Cruces
SunE EPE2 LLC Crawford Blvd L
Las Cruces NM 88007

Invoice	INV00013774
Invoice Date	3/5/2024
Term	Net 30
Due Date	4/4/2024
Site:	
Project #	NM-10-0014
Project	NM - EPE - Las Cruces
Meter Number	

Charge Detail

Description	Period From	Period To	Quantity	Unit	Unit Price	Amount (USD)
Solar Generation Fee: Non-Rated Generation	2/1/2024	2/29/2024	2,084.09	MWH	$104.89	$218,600.10

Thank you for your business!

Current Charges	$218,600.10
Tax	$0.00
Total	**$218,600.10**

Payment Instructions

Wire Funds to the following account:	Send ACH payments to the below Account	Make checks payable to	SunE EPE2, LLC
[redacted]	[redacted]	[redacted]	

For questions about this invoice, please contact Accounts Receivable at receivables@siliconranchcorp.com or at (615) 577-4786.
For questions about your service, please contact Dylan Sontag at Dylan.Sontag@Siliconranchcorp.com.

For additional information, refer to next page.

* Tax is included on invoices for transactions in states where tax is imposed on sales of electricity unless customer provides a proper exemption certificate.

RENEWABLE ENERGY CERTIFICATE

Period: For the month of 02/01/2024

Source of REC: Renewable Energy Provider

SunE EPE2, LLC
C/O Silicon Ranch Corporation
222 2nd Ave South, Suite 1900
Nashville, Tennessee 37201
EPE - Las Cruces Industrial

Contact:
Dylan Sontag
O&M Manager
C/O Silicon Ranch Corporation
222 2nd Ave South, Suite 1900
Nashville, Tennessee 37201
dylan.sontag@siliconranchcorp.com

Generator Type: Solar Photovoltaic

Nameplate Capacity: 13.625 (in MW)

Date of generator start-up: 5/2/2012

Fuel source: Solar

Revenue meter manufacturer and indentification/serial number
1075758965

Location of generator: Crawford Blvd, Las Cruces, NM 88007

Renewable Energy Purchaser

Interconnection Utility: El Paso Electric Company

Control Area Operator: El Paso Electric

EPE Contact:
Evan Evans
P.O. Box 982
El Paso, TX 79960
(915) 543-5995
Fax (915) 521-4729

MONTHLY STATEMENT OF RECS

Renewable Energy delivery for the month of: 02/01/2024

Energy Delivered: 2,098,239.00 KWH

Weighted Value of Energy Delivered: 2,098,239.00 kWh (multiply by RPS multiplier)

SUPPLIER CERTIFICATION

I, Dylan Sontag herby certify that:

The energy produced, sold and delivered by SunE EPE2, LLC to El Paso Electric Company from these facilities is from a renewable energy source, as defined by the New Mexico Renewable Energy Act, NMSA 1978, Section 62-16-1 et seq. and the NMPRC Rule 572, Renewable Energy for Electric Utilities, 17.9.572 NMAC;

Each kilowatt hour of electricity is generated using a Solar fuel source, and

No other Renewable Energy Certificates associated with the renewable energy produced and delivered by SunE EPE2, LLC to El Paso Electric have been traded, sold, retired or otherwise transferred by SunE EPE2, LLC to any other person or entity.

By:

Dylan Sontag - Director, Asset Operations and Performance Engineering

03/05/2024
Date

SILICON RANCH

2024 March

Bill From
SunE EPE2, LLC
222 Second Avenue South
Suite 1900
Nashville TN 37201

Bill To:
El Paso Electric Company
NM - EPE - Las Cruces
PO Box 982
El Paso TX 79960

Ship To:
NM - EPE - Las Cruces
SunE EPE2 LLC Crawford Blvd L
Las Cruces NM 88007

Invoice	INV00013953
Invoice Date	4/3/2024
Term	Net 30
Due Date	5/3/2024
Site:	
Project #	NM-10-0014
Project	NM - EPE - Las Cruces
Meter Number	

Charge Detail

Description	Period From	Period To	Quantity	Unit	Unit Price	Amount (USD)
Solar Generation Fee: Non-Rated Generation	3/1/2024	3/31/2024	2,546.77	MWH	$104.89	$267,130.21

Thank you for your business!

Current Charges	$267,130.21
Tax	$0.00
Total	**$267,130.21**

Payment Instructions

Wire Funds to the following account:	Send ACH payments to the below Account	Make checks payable to	SunE EPE2, LLC
[redacted]	[redacted]	[redacted]	

For questions about this invoice, please contact Accounts Receivable at receivables@siliconranchcorp.com or at (615) 577-4786.
For questions about your service, please contact Dylan Sontag at Dylan.Sontag@Siliconranchcorp.com.

For additional information, refer to next page.

* Tax is included on invoices for transactions in states where tax is imposed on sales of electricity unless customer provides a proper exemption certificate.

RENEWABLE ENERGY CERTIFICATE

Period: For the month of 03/01/2024

Source of REC: Renewable Energy Provider

SunE EPE2, LLC
C/O Silicon Ranch Corporation
222 2nd Ave South, Suite 1900
Nashville, Tennessee 37201
EPE - Las Cruces Industrial

Contact:
Dylan Sontag
O&M Manager
C/O Silicon Ranch Corporation
222 2nd Ave South, Suite 1900
Nashville, Tennessee 37201
dylan.sontag@siliconranchcorp.com

Generator Type: Solar Photovoltaic

Nameplate Capacity: 13.625 (in MW)

Date of generator start-up: 5/2/2012

Fuel source: Solar

Revenue meter manufacturer and indentification/serial number
1075758965

Location of generator: Crawford Blvd, Las Cruces, NM 88007

Renewable Energy Purchaser

Interconnection Utility: El Paso Electric Company

Control Area Operator: El Paso Electric

EPE Contact:
Evan Evans
P.O. Box 982
El Paso, TX 79960
(915) 543-5995
Fax (915) 521-4729

MONTHLY STATEMENT OF RECS

Renewable Energy delivery for the month of: 03/01/2024

Energy Delivered: 2,560,706.50 KWH

Weighted Value of Energy Delivered: 2,560,706.50 kWh (multiply by RPS multiplier)

SUPPLIER CERTIFICATION

I, Dylan Sontag herby certify that:

The energy produced, sold and delivered by SunE EPE2, LLC to El Paso Electric Company from these facilities is from a renewable energy source, as defined by the New Mexico Renewable Energy Act, NMSA 1978, Section 62-16-1 et seq. and the NMPRC Rule 572, Renewable Energy for Electric Utilities, 17.9.572 NMAC;

Each kilowatt hour of electricity is generated using a Solar fuel source, and

No other Renewable Energy Certificates associated with the renewable energy produced and delivered by SunE EPE2, LLC to El Paso Electric have been traded, sold, retired or otherwise transferred by SunE EPE2, LLC to any other person or entity.

By:

Dylan Sontag - Director, Asset Operations and Performance Engineering

04/03/2024
Date

2024 April

SILICON RANCH

Bill From
SunE EPE2, LLC
222 Second Avenue South
Suite 1900
Nashville TN 37201

Bill To:
El Paso Electric Company
NM - EPE - Las Cruces
PO Box 982
El Paso TX 79960

Ship To:
NM - EPE - Las Cruces
SunE EPE2 LLC Crawford Blvd L
Las Cruces NM 88007

Invoice	INV00014216
Invoice Date	5/8/2024
Term	Net 30
Due Date	6/7/2024
Site:	
Project #	NM-10-0014
Project	NM - EPE - Las Cruces
Meter Number	

Charge Detail

Description	Period From	Period To	Quantity	Unit	Unit Price	Amount (USD)
Solar Generation Fee: Non-Rated Generation	4/1/2024	4/30/2024	2,896.66	MWH	$104.89	$303,831.09

Thank you for your business!

Current Charges	$303,831.09
Tax	$0.00
Total	**$303,831.09**

Payment Instructions

Wire Funds to the following account:	Send ACH payments to the below Account	Make checks payable to	SunE EPE2, LLC
[redacted]	[redacted]	[redacted]	

For questions about this invoice, please contact Accounts Receivable at receivables@siliconranchcorp.com or at (615) 577-4786.
For questions about your service, please contact Dylan Sontag at Dylan.Sontag@Siliconranchcorp.com.

For additional information, refer to next page.

* Tax is included on invoices for transactions in states where tax is imposed on sales of electricity unless customer provides a proper exemption certificate.

RENEWABLE ENERGY CERTIFICATE

Period: For the month of 04/01/2024

Source of REC: Renewable Energy Provider

SunE EPE2, LLC
C/O Silicon Ranch Corporation
222 2nd Ave South, Suite 1900
Nashville, Tennessee 37201
EPE - Las Cruces Industrial

Contact:
Dylan Sontag
O&M Manager
C/O Silicon Ranch Corporation
222 2nd Ave South, Suite 1900
Nashville, Tennessee 37201
dylan.sontag@siliconranchcorp.com

Generator Type: Solar Photovoltaic

Nameplate Capacity: 13.625 (in MW)

Date of generator start-up: 5/2/2012

Fuel source: Solar

Revenue meter manufacturer and indentification/serial number
1075758965

Location of generator: Crawford Blvd, Las Cruces, NM 88007

Renewable Energy Purchaser

Interconnection Utility: El Paso Electric Company

Control Area Operator: El Paso Electric

EPE Contact:
Evan Evans
P.O. Box 982
El Paso, TX 79960
(915) 543-5995
Fax (915) 521-4729

MONTHLY STATEMENT OF RECS

Renewable Energy delivery for the month of: 04/01/2024

Energy Delivered: 2,909,279.00 KWH

Weighted Value of Energy Delivered: 2,909,279.00 kWh (multiply by RPS multiplier)

SUPPLIER CERTIFICATION

I, Dylan Sontag herby certify that:

The energy produced, sold and delivered by SunE EPE2, LLC to El Paso Electric Company from these facilities is from a renewable energy source, as defined by the New Mexico Renewable Energy Act, NMSA 1978, Section 62-16-1 et seq. and the NMPRC Rule 572, Renewable Energy for Electric Utilities, 17.9.572 NMAC;

Each kilowatt hour of electricity is generated using a Solar fuel source, and

No other Renewable Energy Certificates associated with the renewable energy produced and delivered by SunE EPE2, LLC to El Paso Electric have been traded, sold, retired or otherwise transferred by SunE EPE2, LLC to any other person or entity.

By:

Dylan Sontag - Director, Asset Operations and Performance Engineering

05/08/2024
Date

SILICON RANCH

2024 May

Bill From
SunE EPE2, LLC
222 Second Avenue South
Suite 1900
Nashville TN 37201

Bill To:
El Paso Electric Company
NM - EPE - Las Cruces
PO Box 982
El Paso TX 79960

Ship To:
NM - EPE - Las Cruces
SunE EPE2 LLC Crawford Blvd L
Las Cruces NM 88007

Invoice	INV00014304
Invoice Date	6/5/2024
Term	Net 30
Due Date	7/5/2024
Site:	
Project #	NM-10-0014
Project	NM - EPE - Las Cruces
Meter Number	

Charge Detail

Description	Period From	Period To	Quantity	Unit	Unit Price	Amount (USD)
Solar Generation Fee: Non-Rated Generation	5/1/2024	5/31/2024	3,229.44	MWH	$104.89	$338,736.17

Thank you for your business!

Current Charges	$338,736.17
Tax	$0.00
Total	**$338,736.17**

Payment Instructions

Wire Funds to the following account:	Send ACH payments to the below Account	Make checks payable to	SunE EPE2, LLC
[redacted]	[redacted]	[redacted]	

For questions about this invoice, please contact Accounts Receivable at receivables@siliconranchcorp.com or at (615) 577-4786.
For questions about your service, please contact Asset Management at srcassetmanagement@siliconranch.com.

For additional information, refer to next page.

* Tax is included on invoices for transactions in states where tax is imposed on sales of electricity unless customer provides a proper exemption certificate.

RENEWABLE ENERGY CERTIFICATE

Period: For the month of 05/01/2024

Source of REC: Renewable Energy Provider

SunE EPE2, LLC
C/O Silicon Ranch Corporation
222 2nd Ave South, Suite 1900
Nashville, Tennessee 37201
EPE - Las Cruces Industrial

Contact:
Dylan Sontag
O&M Manager
C/O Silicon Ranch Corporation
222 2nd Ave South, Suite 1900
Nashville, Tennessee 37201
dylan.sontag@siliconranchcorp.com

Generator Type: Solar Photovoltaic

Nameplate Capacity: 13.625 (in MW)

Date of generator start-up: 5/2/2012

Fuel source: Solar

Revenue meter manufacturer and indentification/serial number
1075758965

Location of generator: Crawford Blvd, Las Cruces, NM 88007

Renewable Energy Purchaser

Interconnection Utility: El Paso Electric Company

Control Area Operator: El Paso Electric

EPE Contact:
Evan Evans
P.O. Box 982
El Paso, TX 79960
(915) 543-5995
Fax (915) 521-4729

MONTHLY STATEMENT OF RECS

Renewable Energy delivery for the month of: 05/01/2024

Energy Delivered: 3,240,729.00 KWH

Weighted Value of Energy Delivered: 3,240,729.00 kWh (multiply by RPS multiplier)

SUPPLIER CERTIFICATION

I, Dylan Sontag herby certify that:

The energy produced, sold and delivered by SunE EPE2, LLC to El Paso Electric Company from these facilities is from a renewable energy source, as defined by the New Mexico Renewable Energy Act, NMSA 1978, Section 62-16-1 et seq. and the NMPRC Rule 572, Renewable Energy for Electric Utilities, 17.9.572 NMAC;

Each kilowatt hour of electricity is generated using a Solar fuel source, and

No other Renewable Energy Certificates associated with the renewable energy produced and delivered by SunE EPE2, LLC to El Paso Electric have been traded, sold, retired or otherwise transferred by SunE EPE2, LLC to any other person or entity.

By:

Dylan Sontag - Director, Asset Operations and Performance Engineering

06/05/2024
Date

SILICON RANCH

2024 June

Bill From
SunE EPE2, LLC
222 Second Avenue South
Suite 1900
Nashville TN 37201

Bill To:
El Paso Electric Company
NM - EPE - Las Cruces
PO Box 982
El Paso TX 79960

Ship To:
NM - EPE - Las Cruces
SunE EPE2 LLC Crawford Blvd L
Las Cruces NM 88007

Invoice	INV00014487
Invoice Date	7/8/2024
Term	Net 30
Due Date	8/7/2024
Site:	
Project #	NM-10-0014
Project	NM - EPE - Las Cruces
Meter Number	

Charge Detail

Description	Period From	Period To	Quantity	Unit	Unit Price	Amount (USD)
Solar Generation Fee: Non-Rated Generation	6/1/2024	6/30/2024	2,714.09	MWH	$104.89	$284,680.69

Thank you for your business!

Current Charges	$284,680.69
Tax	$0.00
Total	**$284,680.69**

Payment Instructions

Wire Funds to the following account:	Send ACH payments to the below Account	Make checks payable to	SunE EPE2, LLC
[redacted]	[redacted]	[redacted]	

For questions about this invoice, please contact Accounts Receivable at receivables@siliconranchcorp.com or at (615) 577-4786.
For questions about your service, please contact Asset Management at srcassetmanagement@siliconranch.com.

For additional information, refer to next page.

* Tax is included on invoices for transactions in states where tax is imposed on sales of electricity unless customer provides a proper exemption certificate.

RENEWABLE ENERGY CERTIFICATE

Period: For the month of 06/01/2024

Source of REC: Renewable Energy Provider

SunE EPE2, LLC
C/O Silicon Ranch Corporation
222 2nd Ave South, Suite 1900
Nashville, Tennessee 37201
EPE - Las Cruces Industrial

Contact:
Dylan Sontag
O&M Manager
C/O Silicon Ranch Corporation
222 2nd Ave South, Suite 1900
Nashville, Tennessee 37201
dylan.sontag@siliconranchcorp.com

Generator Type: Solar Photovoltaic

Nameplate Capacity: 13.625 (in MW)

Date of generator start-up: 5/2/2012

Fuel source: Solar

Revenue meter manufacturer and indentification/serial number
1075758965

Location of generator: Crawford Blvd, Las Cruces, NM 88007

Renewable Energy Purchaser

Interconnection Utility: El Paso Electric Company

Control Area Operator: El Paso Electric

EPE Contact:
Evan Evans
P.O. Box 982
El Paso, TX 79960
(915) 543-5995
Fax (915) 521-4729

MONTHLY STATEMENT OF RECS

Renewable Energy delivery for the month of: 06/01/2024

Energy Delivered: 2,724,916.00 KWH

Weighted Value of Energy Delivered: 2,724,916.00 kWh (multiply by RPS multiplier)

SUPPLIER CERTIFICATION

I, Dylan Sontag herby certify that:

The energy produced, sold and delivered by SunE EPE2, LLC to El Paso Electric Company from these facilities is from a renewable energy source, as defined by the New Mexico Renewable Energy Act, NMSA 1978, Section 62-16-1 et seq. and the NMPRC Rule 572, Renewable Energy for Electric Utilities, 17.9.572 NMAC;

Each kilowatt hour of electricity is generated using a Solar fuel source, and

No other Renewable Energy Certificates associated with the renewable energy produced and delivered by SunE EPE2, LLC to El Paso Electric have been traded, sold, retired or otherwise transferred by SunE EPE2, LLC to any other person or entity.

By:

Dylan Sontag - Director, Asset Operations and Performance Engineering

07/08/2024
Date

SILICON RANCH

2024 July

Bill From
SunE EPE2, LLC
222 Second Avenue South
Suite 1900
Nashville TN 37201

Bill To:
El Paso Electric Company
NM - EPE - Las Cruces
PO Box 982
El Paso TX 79960

Ship To:
NM - EPE - Las Cruces
SunE EPE2 LLC Crawford Blvd L
Las Cruces NM 88007

Invoice	INV00014663
Invoice Date	8/5/2024
Term	Net 30
Due Date	9/4/2024
Site:	
Project #	NM-10-0014
Project	NM - EPE - Las Cruces
Meter Number	

Charge Detail

Description	Period From	Period To	Quantity	Unit	Unit Price	Amount (USD)
Solar Generation Fee: Non-Rated Generation	7/1/2024	7/31/2024	2,797.41	MWH	$104.89	$293,420.23

Thank you for your business!

Current Charges	$293,420.23
Tax	$0.00
Total	**$293,420.23**

Payment Instructions

Wire Funds to the following account:	Send ACH payments to the below Account	Make checks payable to	SunE EPE2, LLC
[redacted]	[redacted]	[redacted]	

For questions about this invoice, please contact Accounts Receivable at receivables@siliconranchcorp.com or at (615) 577-4786.
For questions about your service, please contact Asset Management at srcassetmanagement@siliconranch.com.

For additional information, refer to next page.

* Tax is included on invoices for transactions in states where tax is imposed on sales of electricity unless customer provides a proper exemption certificate.

RENEWABLE ENERGY CERTIFICATE

Period: For the month of 07/01/2024

Source of REC: Renewable Energy Provider

SunE EPE2, LLC
C/O Silicon Ranch Corporation
222 2nd Ave South, Suite 1900
Nashville, Tennessee 37201
EPE - Las Cruces Industrial

Contact:
Dylan Sontag
O&M Manager
C/O Silicon Ranch Corporation
222 2nd Ave South, Suite 1900
Nashville, Tennessee 37201
dylan.sontag@siliconranchcorp.com

Generator Type: Solar Photovoltaic

Nameplate Capacity: 13.625 (in MW)

Date of generator start-up: 5/2/2012

Fuel source: Solar

Revenue meter manufacturer and indentification/serial number
1075758965

Location of generator: Crawford Blvd, Las Cruces, NM 88007

Renewable Energy Purchaser

Interconnection Utility: El Paso Electric Company

Control Area Operator: El Paso Electric

EPE Contact:
Evan Evans
P.O. Box 982
El Paso, TX 79960
(915) 543-5995
Fax (915) 521-4729

MONTHLY STATEMENT OF RECS

Renewable Energy delivery for the month of: 07/01/2024

Energy Delivered: 2,808,479.90 KWH

Weighted Value of Energy Delivered: 2,808,479.90 kWh (multiply by RPS multiplier)

SUPPLIER CERTIFICATION

I, Dylan Sontag herby certify that:

The energy produced, sold and delivered by SunE EPE2, LLC to El Paso Electric Company from these facilities is from a renewable energy source, as defined by the New Mexico Renewable Energy Act, NMSA 1978, Section 62-16-1 et seq. and the NMPRC Rule 572, Renewable Energy for Electric Utilities, 17.9.572 NMAC;

Each kilowatt hour of electricity is generated using a Solar fuel source, and

No other Renewable Energy Certificates associated with the renewable energy produced and delivered by SunE EPE2, LLC to El Paso Electric have been traded, sold, retired or otherwise transferred by SunE EPE2, LLC to any other person or entity.

By:

Dylan Sontag - Director, Asset Operations and Performance Engineering

08/05/2024
Date

SILICON RANCH

2024 August

Bill From
SunE EPE2, LLC
222 Second Avenue South
Suite 1900
Nashville TN 37201

Bill To:
El Paso Electric Company
NM - EPE - Las Cruces
PO Box 982
El Paso TX 79960

Ship To:
NM - EPE - Las Cruces
SunE EPE2 LLC Crawford Blvd L
Las Cruces NM 88007

Invoice	INV00014855
Invoice Date	9/9/2024
Term	Net 30
Due Date	10/9/2024
Site:	
Project #	NM-10-0014
Project	NM - EPE - Las Cruces
Meter Number	

Charge Detail

Description	Period From	Period To	Quantity	Unit	Unit Price	Amount (USD)
Solar Generation Fee: Non-Rated Generation	8/1/2024	8/31/2024	2,443.04	MWH	$104.89	$256,250.47

Thank you for your business!

Current Charges	$256,250.47
Tax	$0.00
Total	**$256,250.47**

Payment Instructions

Wire Funds to the following account:	Send ACH payments to the below Account	Make checks payable to	SunE EPE2, LLC
[redacted]	[redacted]	[redacted]	

For questions about this invoice, please contact Accounts Receivable at receivables@siliconranchcorp.com or at (615) 577-4786.
For questions about your service, please contact Asset Management at srcassetmanagement@siliconranch.com.

For additional information, refer to next page.

* Tax is included on invoices for transactions in states where tax is imposed on sales of electricity unless customer provides a proper exemption certificate.

RENEWABLE ENERGY CERTIFICATE

Period: For the month of 08/01/2024

Source of REC: Renewable Energy Provider

SunE EPE2, LLC
C/O Silicon Ranch Corporation
222 2nd Ave South, Suite 1900
Nashville, Tennessee 37201
EPE - Las Cruces Industrial

Contact:
Dylan Sontag
O&M Manager
C/O Silicon Ranch Corporation
222 2nd Ave South, Suite 1900
Nashville, Tennessee 37201
dylan.sontag@siliconranchcorp.com

Generator Type: Solar Photovoltaic

Nameplate Capacity: 13.625 (in MW)

Date of generator start-up: 5/2/2012

Fuel source: Solar

Revenue meter manufacturer and indentification/serial number
1075758965

Location of generator: Crawford Blvd, Las Cruces, NM 88007

Renewable Energy Purchaser

Interconnection Utility: El Paso Electric Company

Control Area Operator: El Paso Electric

EPE Contact:
Evan Evans
P.O. Box 982
El Paso, TX 79960
(915) 543-5995
Fax (915) 521-4729

MONTHLY STATEMENT OF RECS

Renewable Energy delivery for the month of: 08/01/2024

Energy Delivered: 2,454,071.00 KWH

Weighted Value of Energy Delivered: 2,454,071.00 kWh (multiply by RPS multiplier)

SUPPLIER CERTIFICATION

I, Dylan Sontag herby certify that:

The energy produced, sold and delivered by SunE EPE2, LLC to El Paso Electric Company from these facilities is from a renewable energy source, as defined by the New Mexico Renewable Energy Act, NMSA 1978, Section 62-16-1 et seq. and the NMPRC Rule 572, Renewable Energy for Electric Utilities, 17.9.572 NMAC;

Each kilowatt hour of electricity is generated using a Solar fuel source, and

No other Renewable Energy Certificates associated with the renewable energy produced and delivered by SunE EPE2, LLC to El Paso Electric have been traded, sold, retired or otherwise transferred by SunE EPE2, LLC to any other person or entity.

By:

Dylan Sontag - Director, Asset Operations and Performance Engineering

09/09/2024
Date

SILICON RANCH

2024 September

Bill From
SunE EPE2, LLC
222 Second Avenue South
Suite 1900
Nashville TN 37201

Bill To:
El Paso Electric Company
NM - EPE - Las Cruces
PO Box 982
El Paso TX 79960

Ship To:
NM - EPE - Las Cruces
SunE EPE2 LLC Crawford Blvd L
Las Cruces NM 88007

Invoice	INV00015030
Invoice Date	10/7/2024
Term	Net 30
Due Date	11/6/2024
Site:	
Project #	NM-10-0014
Project	NM - EPE - Las Cruces
Meter Number	

Charge Detail

Description	Period From	Period To	Quantity	Unit	Unit Price	Amount (USD)
Solar Generation Fee: Non-Rated Generation	9/1/2024	9/30/2024	2,387.94	MWH	$104.89	$250,471.31

Thank you for your business!

Current Charges	$250,471.31
Tax	$0.00
Total	**$250,471.31**

Payment Instructions

Wire Funds to the following account:	Send ACH payments to the below Account	Make checks payable to	SunE EPE2, LLC
[redacted]	[redacted]	[redacted]	

For questions about this invoice, please contact Accounts Receivable at receivables@siliconranchcorp.com or at (615) 577-4786.
For questions about your service, please contact Asset Management at srcassetmanagement@siliconranch.com.

For additional information, refer to next page.

* Tax is included on invoices for transactions in states where tax is imposed on sales of electricity unless customer provides a proper exemption certificate.

RENEWABLE ENERGY CERTIFICATE

Period: For the month of 09/01/2024

Source of REC: Renewable Energy Provider

SunE EPE2, LLC
C/O Silicon Ranch Corporation
222 2nd Ave South, Suite 1900
Nashville, Tennessee 37201
EPE - Las Cruces Industrial

Contact:
Dylan Sontag
O&M Manager
C/O Silicon Ranch Corporation
222 2nd Ave South, Suite 1900
Nashville, Tennessee 37201
dylan.sontag@siliconranchcorp.com

Generator Type: Solar Photovoltaic

Nameplate Capacity: 13.625 (in MW)

Date of generator start-up: 5/2/2012

Fuel source: Solar

Revenue meter manufacturer and indentification/serial number
1075758965

Location of generator: Crawford Blvd, Las Cruces, NM 88007

Renewable Energy Purchaser

Interconnection Utility: El Paso Electric Company

Control Area Operator: El Paso Electric

EPE Contact:
Evan Evans
P.O. Box 982
El Paso, TX 79960
(915) 543-5995
Fax (915) 521-4729

MONTHLY STATEMENT OF RECS

Renewable Energy delivery for the month of: 09/01/2024

Energy Delivered: 2,399,623.48 KWH

Weighted Value of Energy Delivered: 2,399,623.48 kWh (multiply by RPS multiplier)

SUPPLIER CERTIFICATION

I, Dylan Sontag herby certify that:

The energy produced, sold and delivered by SunE EPE2, LLC to El Paso Electric Company from these facilities is from a renewable energy source, as defined by the New Mexico Renewable Energy Act, NMSA 1978, Section 62-16-1 et seq. and the NMPRC Rule 572, Renewable Energy for Electric Utilities, 17.9.572 NMAC;

Each kilowatt hour of electricity is generated using a Solar fuel source, and

No other Renewable Energy Certificates associated with the renewable energy produced and delivered by SunE EPE2, LLC to El Paso Electric have been traded, sold, retired or otherwise transferred by SunE EPE2, LLC to any other person or entity.

By:

Dylan Sontag - Director, Asset Operations and Performance Engineering

10/07/2024
Date

SILICON RANCH

2024 October

Bill From
SunE EPE2, LLC
222 Second Avenue South
Suite 1900
Nashville TN 37201

Bill To:
El Paso Electric Company
NM - EPE - Las Cruces
PO Box 982
El Paso TX 79960

Ship To:
NM - EPE - Las Cruces
SunE EPE2 LLC Crawford Blvd L
Las Cruces NM 88007

Invoice	INV00015207
Invoice Date	11/7/2024
Term	Net 30
Due Date	12/7/2024
Site:	
Project #	NM-10-0014
Project	NM - EPE - Las Cruces
Meter Number	

Charge Detail

Description	Period From	Period To	Quantity	Unit	Unit Price	Amount (USD)
Solar Generation Fee: Non-Rated Generation	10/1/2024	10/31/2024	2,298.68	MWH	$104.89	$241,108.82

Thank you for your business!

Current Charges	$241,108.82
Tax	$0.00
Total	**$241,108.82**

Payment Instructions

Wire Funds to the following account:	Send ACH payments to the below Account	Make checks payable to	SunE EPE2, LLC
[redacted]	[redacted]	[redacted]	

For questions about this invoice, please contact Accounts Receivable at receivables@siliconranchcorp.com or at (615) 577-4786.
For questions about your service, please contact Asset Management at srcassetmanagement@siliconranch.com.

For additional information, refer to next page.

* Tax is included on invoices for transactions in states where tax is imposed on sales of electricity unless customer provides a proper exemption certificate.

RENEWABLE ENERGY CERTIFICATE

Period: For the month of 10/01/2024

Source of REC: Renewable Energy Provider

SunE EPE2, LLC
C/O Silicon Ranch Corporation
222 2nd Ave South, Suite 1900
Nashville, Tennessee 37201
EPE - Las Cruces Industrial

Contact:
Dylan Sontag
O&M Manager
C/O Silicon Ranch Corporation
222 2nd Ave South, Suite 1900
Nashville, Tennessee 37201
dylan.sontag@siliconranchcorp.com

Generator Type: Solar Photovoltaic

Nameplate Capacity: 13.625 (in MW)

Date of generator start-up: 5/2/2012

Fuel source: Solar

Revenue meter manufacturer and indentification/serial number
1075758965

Location of generator: Crawford Blvd, Las Cruces, NM 88007

Renewable Energy Purchaser

Interconnection Utility: El Paso Electric Company

Control Area Operator: El Paso Electric

EPE Contact:
Evan Evans
P.O. Box 982
El Paso, TX 79960
(915) 543-5995
Fax (915) 521-4729

MONTHLY STATEMENT OF RECS

Renewable Energy delivery for the month of: 10/01/2024

Energy Delivered: 2,311,747.30 KWH

Weighted Value of Energy Delivered: 2,311,747.30 kWh (multiply by RPS multiplier)

SUPPLIER CERTIFICATION

I, Dylan Sontag, herby certify that:

The energy produced, sold and delivered by SunE EPE2, LLC to El Paso Electric Company from these facilities is from a renewable energy source, as defined by the New Mexico Renewable Energy Act, NMSA 1978, Section 62-16-1 et seq. and the NMPRC Rule 572, Renewable Energy for Electric Utilities, 17.9.572 NMAC;

Each kilowatt hour of electricity is generated using a Solar fuel source, and

No other Renewable Energy Certificates associated with the renewable energy produced and delivered by SunE EPE2, LLC to El Paso Electric have been traded, sold, retired or otherwise transferred by SunE EPE2, LLC to any other person or entity.

By:

Dylan Sontag - Director, Asset Operations and Performance Engineering

11/07/2024
Date

SILICON RANCH

2024 November

Bill From
SunE EPE2, LLC
222 Second Avenue South
Suite 1900
Nashville TN 37201

Bill To:
El Paso Electric Company
NM - EPE - Las Cruces
PO Box 982
El Paso TX 79960

Ship To:
NM - EPE - Las Cruces
SunE EPE2 LLC Crawford Blvd L
Las Cruces NM 88007

Invoice	INV00015367
Invoice Date	12/3/2024
Term	Net 30
Due Date	1/2/2025
Site:	
Project #	NM-10-0014
Project	NM - EPE - Las Cruces
Meter Number	

Charge Detail

Description	Period From	Period To	Quantity	Unit	Unit Price	Amount (USD)
Solar Generation Fee: Non-Rated Generation	11/1/2024	11/30/2024	1,985.79	MWH	$104.89	$208,289.25

Thank you for your business!

Current Charges	$208,289.25
Tax	$0.00
Total	**$208,289.25**

Payment Instructions

Wire Funds to the following account:	Send ACH payments to the below Account	Make checks payable to	SunE EPE2, LLC
[redacted]	[redacted]	[redacted]	

For questions about this invoice, please contact Accounts Receivable at receivables@siliconranchcorp.com or at (615) 577-4786.
For questions about your service, please contact Asset Management at srcassetmanagement@siliconranch.com.

For additional information, refer to next page.

* Tax is included on invoices for transactions in states where tax is imposed on sales of electricity unless customer provides a proper exemption certificate.

RENEWABLE ENERGY CERTIFICATE

Period: For the month of 11/01/2024

Source of REC: Renewable Energy Provider

SunE EPE2, LLC
C/O Silicon Ranch Corporation
222 2nd Ave South, Suite 1900
Nashville, Tennessee 37201
EPE - Las Cruces Industrial

Contact:
Dylan Sontag
O&M Manager
C/O Silicon Ranch Corporation
222 2nd Ave South, Suite 1900
Nashville, Tennessee 37201
dylan.sontag@siliconranchcorp.com

Generator Type: Solar Photovoltaic

Nameplate Capacity: 13.625 (in MW)

Date of generator start-up: 5/2/2012

Fuel source: Solar

Revenue meter manufacturer and indentification/serial number
1075758965

Location of generator: Crawford Blvd, Las Cruces, NM 88007

Renewable Energy Purchaser

Interconnection Utility: El Paso Electric Company

Control Area Operator: El Paso Electric

EPE Contact:
Evan Evans
P.O. Box 982
El Paso, TX 79960
(915) 543-5995
Fax (915) 521-4729

MONTHLY STATEMENT OF RECS

Renewable Energy delivery for the month of: 11/01/2024

Energy Delivered: 1,999,520.64 KWH

Weighted Value of Energy Delivered: 1,999,520.64 kWh (multiply by RPS multiplier)

SUPPLIER CERTIFICATION

I, Dylan Sontag herby certify that:

The energy produced, sold and delivered by SunE EPE2, LLC to El Paso Electric Company from these facilities is from a renewable energy source, as defined by the New Mexico Renewable Energy Act, NMSA 1978, Section 62-16-1 et seq. and the NMPRC Rule 572, Renewable Energy for Electric Utilities, 17.9.572 NMAC;

Each kilowatt hour of electricity is generated using a Solar fuel source, and

No other Renewable Energy Certificates associated with the renewable energy produced and delivered by SunE EPE2, LLC to El Paso Electric have been traded, sold, retired or otherwise transferred by SunE EPE2, LLC to any other person or entity.

By:

Dylan Sontag - Director, Asset Operations and Performance Engineering

12/03/2024
Date

SILICON RANCH

2024 December

Bill From
SunE EPE2, LLC
222 Second Avenue South
Suite 1900
Nashville TN 37201

Bill To:
El Paso Electric Company
NM - EPE - Las Cruces
PO Box 982
El Paso TX 79960

Ship To:
NM - EPE - Las Cruces
SunE EPE2 LLC Crawford Blvd L
Las Cruces NM 88007

Invoice	INV00015565
Invoice Date	1/7/2025
Term	Net 30
Due Date	2/6/2025
Site:	
Project #	NM-10-0014
Project	NM - EPE - Las Cruces
Meter Number	

Charge Detail

Description	Period From	Period To	Quantity	Unit	Unit Price	Amount (USD)
Solar Generation Fee: Non-Rated Generation	12/1/2024	12/31/2024	1,942.00	MWH	$104.89	$203,696.17

Thank you for your business!

Current Charges	$203,696.17
Tax	$0.00
Total	**$203,696.17**

Payment Instructions

Wire Funds to the following account:	Send ACH payments to the below Account	Make checks payable to	SunE EPE2, LLC
[redacted]	[redacted]	[redacted]	

For questions about this invoice, please contact Accounts Receivable at receivables@siliconranchcorp.com or at (615) 577-4786.
For questions about your service, please contact Asset Management at srcassetmanagement@siliconranch.com.

For additional information, refer to next page.

* Tax is included on invoices for transactions in states where tax is imposed on sales of electricity unless customer provides a proper exemption certificate.

RENEWABLE ENERGY CERTIFICATE

Period: For the month of 12/01/2024

Source of REC: Renewable Energy Provider

SunE EPE2, LLC
C/O Silicon Ranch Corporation
222 2nd Ave South, Suite 1900
Nashville, Tennessee 37201
EPE - Las Cruces Industrial

Contact:
Dylan Sontag
O&M Manager
C/O Silicon Ranch Corporation
222 2nd Ave South, Suite 1900
Nashville, Tennessee 37201
dylan.sontag@siliconranchcorp.com

Generator Type: Solar Photovoltaic

Nameplate Capacity: 13.625 (in MW)

Date of generator start-up: 5/2/2012

Fuel source: Solar

Revenue meter manufacturer and indentification/serial number
1075758965

Location of generator: Crawford Blvd, Las Cruces, NM 88007

Renewable Energy Purchaser

Interconnection Utility: El Paso Electric Company

Control Area Operator: El Paso Electric

EPE Contact:
Evan Evans
P.O. Box 982
El Paso, TX 79960
(915) 543-5995
Fax (915) 521-4729

MONTHLY STATEMENT OF RECS

Renewable Energy delivery for the month of: 12/01/2024

Energy Delivered: 1,956,431.00 KWH

Weighted Value of Energy Delivered: 1,956,431.00 kWh (multiply by RPS multiplier)

SUPPLIER CERTIFICATION

I, Dylan Sontag, herby certify that:

The energy produced, sold and delivered by SunE EPE2, LLC to El Paso Electric Company from these facilities is from a renewable energy source, as defined by the New Mexico Renewable Energy Act, NMSA 1978, Section 62-16-1 et seq. and the NMPRC Rule 572, Renewable Energy for Electric Utilities, 17.9.572 NMAC;

Each kilowatt hour of electricity is generated using a Solar fuel source, and

No other Renewable Energy Certificates associated with the renewable energy produced and delivered by SunE EPE2, LLC to El Paso Electric have been traded, sold, retired or otherwise transferred by SunE EPE2, LLC to any other person or entity.

By:

Dylan Sontag - Director, Asset Operations and Performance Engineering

01/07/2025
Date

ATTACHMENT 5

Monthly Solar Energy Purchase Documentation –
Macho Springs Solar, LLC

Macho Springs Solar, LLC
Source: Monthy FPPCAC Reporting

2024	Total Generation kWh	Total Delivered Energy [1] kWh	Total $	NM Supply Allocators	NM RECs kWh	NM Delivered Energy kWh	Total $ for NM
January	4,910,765	4,824,075	$ 279,313.94	0.21243116187	1,043,200	1,024,784	$ 59,334.98
February	6,474,914	6,398,852	$ 370,493.53	0.19638088557	1,271,549	1,256,612	$ 72,757.85
March	9,029,985	8,955,072	$ 518,498.65	0.19037692343	1,719,101	1,704,839	$ 98,710.18
April	10,693,689	10,628,533	$ 615,392.07	0.18028122707	1,927,871	1,916,125	$ 110,943.64
May	13,743,157	13,681,346	$ 792,149.93	0.16582181753	2,278,915	2,268,666	$ 131,355.74
June	12,607,409	12,547,172	$ 726,481.26	0.17689096644	2,230,137	2,219,481	$ 128,507.97
July	13,607,464	13,548,035	$ 784,431.23	0.18392805968	2,502,794	2,491,864	$ 144,278.91
August	12,976,462	12,907,577	$ 747,348.71	0.18836949853	2,444,370	2,431,394	$ 140,777.70
September	12,675,620	12,605,810	$ 729,876.40	0.18896280581	2,395,221	2,382,029	$ 137,919.49
October	10,864,184	10,788,256	$ 624,640.02	0.18163877250	1,973,357	1,959,566	$ 113,458.85
November	8,043,089	7,961,919	$ 460,995.12	0.17850189837	1,435,707	1,421,218	$ 82,288.50
December	7,054,157	6,967,546	$ 403,420.91	0.19130040767	1,349,463	1,332,894	$ 77,174.58
Total	122,680,895	121,814,193	$ 7,053,041.77	n/a	22,571,685	22,409,472	$ 1,297,508.40

[1] Delivered energy equals gross production net of station power.

INV021128

Invoice

Macho Springs SPC PPA

Macho Springs Solar, LLC

Southern Company

El Paso Electric Company

2024 January

Invoice Date: February 07, 2024 Due Date: March 04, 2024

Invoice For: January 2024

If you have questions, please contact Arnisha Rudolph at 334-349-8567 or Shelley Sewell at 205-992-0382.

	Quantity	Rate	Amounts	Totals
Macho Springs January 2024 Billing				
Solar Energy	4824075 Kwh	57.9 $/Mwh		$279,313.94
Test Energy	0 Kwh	38.88 $/Mwh		$0.00
Macho Springs January 2024 Billing Total				$279,313.94
Total Due Macho Springs Solar, LLC				$279,313.94

Information contained in this invoice or report is to be considered "Confidential Information".

The total amount due under the Invoice will be paid to:

[redacted]

[redacted]

TO PREVENT THE POSSIBLITY OF BANK OR WIRING FRAUD: Southern Company and it affiliates will not change or amend its bank details without prior formal notification. Any changes to banking information must be verbally confirmed with a Southern Company Services representative.

RENEWABLE ENERGY CERTIFICATE

Period: For the month of January 2024

Source of REC: Renewable Energy Provider
Macho Springs Solar, LLC
18120 Hatch Hwy NE
Deming, NM 88030

Seller Contact: Kayla Turner
Southern Power Company
3535 Colonnade Parkway
Birmingham, AL 35243
Phone: 251-895-9390
Email: kayturne@southernco.com

Generator type: Solar Energy

Nameplate capacity: 50 MW (ac)

Date of generator start-up: Feb 27, 2014

Fuel source: Solar energy

Revenue Meter manufacturer and identification / serial number: SEL-735, S/N- 1130300490

Location of generator: Macho Springs Solar, LLC
18120 Hatch Hwy NE
Deming, NM

Renewable Energy Purchaser: El Paso Electric Company

Interconnection Utility: El Paso Electric Company

Control Area Operator: El Paso Electric Company

EPE Contact: James Schichtl
P.O. Box 982
El Paso, TX 79960
(915) 521-4697
Fax (915) 521-4605

MONTHLY STATEMENT OF RECS

Renewable Energy delivery for the month of January 2024
Energy Delivered: 4,910,765 kWh

Weighted Value of Energy Delivered kWh: 4,910,765 kWh (multiply by RPS multiplier)

SUPPLIER CERTIFICATION

I, Elizabeth Wash, hereby certify that:

The energy, produced, sold and delivered by Macho Springs Solar, LLC ("Seller") to El Paso Electric Company from these facilities is from a renewable energy resource, as defined by the New Mexico Renewable Energy Act, NMSA 1978, Section 62-16-1 et seg., and the NMPRC Rule 572, Renewable Energy For Electric Utilities, 17.9.572 NMAC;

Each kilowatt hour of electricity is generated using a solar fuel source; and
No other Renewable Energy Certificates associated with the renewable energy produced and delivered by Seller to El Paso Electric Company have been traded, sold, retired or otherwise transferred by Seller to any other person or entity.

Macho Springs Solar, LLC
By: Southern Power Company, a Delaware corporation, its manager

By: EWash

Elizabeth Wash
Commercial Markets Manager
Date: February 5, 2024

INV021326

Invoice

Macho Springs SPC PPA

Macho Springs Solar, LLC

El Paso Electric Company

2024 February

Southern Company

Invoice Date: March 05, 2024 Due Date: April 02, 2024

Invoice For: February 2024

If you have questions, please contact Arnisha Rudolph at 334-349-8567 or Shelley Sewell at 205-992-0382.

	Quantity	Rate	Amounts	Totals
Macho Spring February 2024				
Solar Energy	6398852 Kwh	57.9 $/Mwh		$370,493.53
Test Energy	0 Kwh	38.88 $/Mwh		$0.00
Macho Spring February 2024 Total				$370,493.53
Total Due Macho Springs Solar, LLC				$370,493.53

Information contained in this invoice or report is to be considered "Confidential Information".

The total amount due under the Invoice will be paid to:

[redacted]

[redacted]

TO PREVENT THE POSSIBLITY OF BANK OR WIRING FRAUD: Southern Company and it affiliates will not change or amend its bank details without prior formal notification. Any changes to banking information must be verbally confirmed with a Southern Company Services representative.

RENEWABLE ENERGY CERTIFICATE

Period: For the month of February 2024

Source of REC: Renewable Energy Provider
Macho Springs Solar, LLC
18120 Hatch Hwy NE
Deming, NM 88030

Seller Contact: Kayla Turner
Southern Power Company
3535 Colonnade Parkway
Birmingham, AL 35243
Phone: 251-895-9390
Email: kayturne@southernco.com

Generator type: Solar Energy

Nameplate capacity: 50 MW (ac)

Date of generator start-up: Feb 27, 2014

Fuel source: Solar energy

Revenue Meter manufacturer and identification / serial number: SEL-735, S/N- 1130300490

Location of generator: Macho Springs Solar, LLC
18120 Hatch Hwy NE
Deming, NM

Renewable Energy Purchaser: El Paso Electric Company

Interconnection Utility: El Paso Electric Company

Control Area Operator: El Paso Electric Company

EPE Contact: James Schichtl
P.O. Box 982
El Paso, TX 79960
(915) 521-4697
Fax (915) 521-4605

MONTHLY STATEMENT OF RECS

Renewable Energy delivery for the month of February 2024
Energy Delivered: 6,474,914 kWh

Weighted Value of Energy Delivered kWh: 6,474,914 kWh (multiply by RPS multiplier)

SUPPLIER CERTIFICATION

I, Elizabeth Wash, hereby certify that:

The energy, produced, sold and delivered by Macho Springs Solar, LLC ("Seller") to El Paso Electric Company from these facilities is from a renewable energy resource, as defined by the New Mexico Renewable Energy Act, NMSA 1978, Section 62-16-1 et seg., and the NMPRC Rule 572, Renewable Energy For Electric Utilities, 17.9.572 NMAC;

Each kilowatt hour of electricity is generated using a solar fuel source; and
No other Renewable Energy Certificates associated with the renewable energy produced and delivered by Seller to El Paso Electric Company have been traded, sold, retired or otherwise transferred by Seller to any other person or entity.

Macho Springs Solar, LLC
By: Southern Power Company, a Delaware corporation, its manager

By: ____ EWash _____

Elizabeth Wash
Commercial Markets Manager
Date: March 4, 2024

INV021489

Invoice

Macho Springs SPC PPA

Macho Springs Solar, LLC

2024 March

Southern Company

El Paso Electric Company

Invoice Date: April 08, 2024 Due Date: May 06, 2024

Invoice For: March 2024

If you have questions, please contact Arnisha Rudolph at 205-992-5654 or Shelley Sewell at 205-992-0382.

	Quantity	Rate	Amounts	Totals
Macho Springs March 2024				
Solar Energy	8955072 Kwh	57.9 $/Mwh		$518,498.67
Test Energy	0 Kwh	38.88 $/Mwh		$0.00
Macho Springs March 2024 Total				$518,498.67
Total Due Macho Springs Solar, LLC				$518,498.67

Information contained in this invoice or report is to be considered "Confidential Information".

The total amount due under the Invoice will be paid to:

[redacted]

[redacted]

TO PREVENT THE POSSIBLITY OF BANK OR WIRING FRAUD: Southern Company and it affiliates will not change or amend its bank details without prior formal notification. Any changes to banking information must be verbally confirmed with a Southern Company Services representative.

RENEWABLE ENERGY CERTIFICATE

Period: For the month of March 2024

Source of REC: Renewable Energy Provider
Macho Springs Solar, LLC
18120 Hatch Hwy NE
Deming, NM 88030

Seller Contact: Kayla Turner
Southern Power Company
3535 Colonnade Parkway
Birmingham, AL 35243
Phone: 251-895-9390
Email: kayturne@southernco.com

Generator type: Solar Energy

Nameplate capacity: 50 MW (ac)

Date of generator start-up: Feb 27, 2014

Fuel source: Solar energy

Revenue Meter manufacturer and identification / serial number: SEL-735, S/N- 1130300490

Location of generator: Macho Springs Solar, LLC
18120 Hatch Hwy NE
Deming, NM

Renewable Energy Purchaser: El Paso Electric Company

Interconnection Utility: El Paso Electric Company

Control Area Operator: El Paso Electric Company

EPE Contact: James Schichtl
P.O. Box 982
El Paso, TX 79960
(915) 521-4697
Fax (915) 521-4605

MONTHLY STATEMENT OF RECS

Renewable Energy delivery for the month of March 2024
Energy Delivered: 9,029,985 kWh

Weighted Value of Energy Delivered kWh: 9,029,985 kWh (multiply by RPS multiplier)

SUPPLIER CERTIFICATION

I, Elizabeth Wash, hereby certify that:

The energy, produced, sold and delivered by Macho Springs Solar, LLC ("Seller") to El Paso Electric Company from these facilities is from a renewable energy resource, as defined by the New Mexico Renewable Energy Act, NMSA 1978, Section 62-16-1 et seg., and the NMPRC Rule 572, Renewable Energy For Electric Utilities, 17.9.572 NMAC;

Each kilowatt hour of electricity is generated using a solar fuel source; and
No other Renewable Energy Certificates associated with the renewable energy produced and delivered by Seller to El Paso Electric Company have been traded, sold, retired or otherwise transferred by Seller to any other person or entity.

Macho Springs Solar, LLC
By: Southern Power Company, a Delaware corporation, its manager

By: EWash

Elizabeth Wash
Commercial Markets Manager
Date: April 2, 2024

INV021778

Invoice

Macho Springs SPC PPA

Macho Springs Solar, LLC

2024 April

Southern Company

El Paso Electric Company

Invoice Date: May 06, 2024 Due Date: June 03, 2024

Invoice For: April 2024

If you have questions, please contact Arnisha Rudolph at 205-992-5654 or Shelley Sewell at 205-992-0382.

	Quantity	Rate	Amounts	Totals
Macho Springs April 2024				
Solar Energy	10628533 Kwh	57.9 $/Mwh		$615,392.06
Test Energy	0 Kwh	38.88 $/Mwh		$0.00
Macho Springs April 2024 Total				$615,392.06
Total Due Macho Springs Solar, LLC				$615,392.06

Information contained in this invoice or report is to be considered "Confidential Information".

The total amount due under the Invoice will be paid to:

[redacted]

[redacted]

TO PREVENT THE POSSIBLITY OF BANK OR WIRING FRAUD: Southern Company and it affiliates will not change or amend its bank details without prior formal notification. Any changes to banking information must be verbally confirmed with a Southern Company Services representative.

RENEWABLE ENERGY CERTIFICATE

Period: For the month of April 2024

Source of REC: Renewable Energy Provider
Macho Springs Solar, LLC
18120 Hatch Hwy NE
Deming, NM 88030

Seller Contact: Kayla Turner
Southern Power Company
3535 Colonnade Parkway
Birmingham, AL 35243
Phone: 251-895-9390
Email: kayturne@southernco.com

Generator type: Solar Energy

Nameplate capacity: 50 MW (ac)

Date of generator start-up: Feb 27, 2014

Fuel source: Solar energy

Revenue Meter manufacturer and identification / serial number: SEL-735, S/N- 1130300490

Location of generator: Macho Springs Solar, LLC
18120 Hatch Hwy NE
Deming, NM

Renewable Energy Purchaser: El Paso Electric Company

Interconnection Utility: El Paso Electric Company

Control Area Operator: El Paso Electric Company

EPE Contact: James Schichtl
P.O. Box 982
El Paso, TX 79960
(915) 521-4697
Fax (915) 521-4605

MONTHLY STATEMENT OF RECS

Renewable Energy delivery for the month of April 2024
Energy Delivered: 10,693,689 kWh

Weighted Value of Energy Delivered kWh: 10,693,689 kWh (multiply by RPS multiplier)

SUPPLIER CERTIFICATION

I, Elizabeth Wash, hereby certify that:

The energy, produced, sold and delivered by Macho Springs Solar, LLC ("Seller") to El Paso Electric Company from these facilities is from a renewable energy resource, as defined by the New Mexico Renewable Energy Act, NMSA 1978, Section 62-16-1 et seg., and the NMPRC Rule 572, Renewable Energy For Electric Utilities, 17.9.572 NMAC;

Each kilowatt hour of electricity is generated using a solar fuel source; and
No other Renewable Energy Certificates associated with the renewable energy produced and delivered by Seller to El Paso Electric Company have been traded, sold, retired or otherwise transferred by Seller to any other person or entity.

Macho Springs Solar, LLC
By: Southern Power Company, a Delaware corporation, its manager

By: EWash

Elizabeth Wash
Commercial Markets Manager
Date: May 6, 2024

Invoice

Macho Springs SPC PPA

Macho Springs Solar, LLC

2024 May

Southern Company

El Paso Electric Company

Invoice Date: June 12, 2024 Due Date: July 11, 2024

Invoice For: May 2024

If you have questions, please contact Arnisha Rudolph at 205-992-5654 or Shelley Sewell at 205-992-0382.

	Quantity	Rate	Amounts	Totals
Macho Springs PPA 14 May 2024				
Solar Energy	13681346 Kwh	57.9 $/Mwh		$792,149.93
Test Energy	0 Kwh	38.88 $/Mwh		$0.00
Macho Springs PPA 14 May 2024 Total				$792,149.93
Macho Springs Shortfall Payment May 2024 Total				-$87,662.13
Total Due Macho Springs Solar, LLC				$704,487.80

Information contained in this invoice or report is to be considered "Confidential Information".

The total amount due under the Invoice will be paid to:

[redacted]

[redacted]

TO PREVENT THE POSSIBLITY OF BANK OR WIRING FRAUD: Southern Company and it affiliates will not change or amend its bank details without prior formal notification. Any changes to banking information must be verbally confirmed with a Southern Company Services representative.

RENEWABLE ENERGY CERTIFICATE

Period: For the month of May 2024

Source of REC: Renewable Energy Provider
Macho Springs Solar, LLC
18120 Hatch Hwy NE
Deming, NM 88030

Seller Contact: Kayla Turner
Southern Power Company
3535 Colonnade Parkway
Birmingham, AL 35243
Phone: 251-895-9390
Email: kayturne@southernco.com

Generator type: Solar Energy

Nameplate capacity: 50 MW (ac)

Date of generator start-up: Feb 27, 2014

Fuel source: Solar energy

Revenue Meter manufacturer and identification / serial number: SEL-735, S/N- 1130300490

Location of generator: Macho Springs Solar, LLC
18120 Hatch Hwy NE
Deming, NM

Renewable Energy Purchaser: El Paso Electric Company

Interconnection Utility: El Paso Electric Company

Control Area Operator: El Paso Electric Company

EPE Contact: James Schichtl
P.O. Box 982
El Paso, TX 79960
(915) 521-4697
Fax (915) 521-4605

MONTHLY STATEMENT OF RECS

Renewable Energy delivery for the month of May 2024
Energy Delivered: 13,743,157 kWh

Weighted Value of Energy Delivered kWh: 13,743,157 kWh (multiply by RPS multiplier)

SUPPLIER CERTIFICATION

I, Elizabeth Wash, hereby certify that:

The energy, produced, sold and delivered by Macho Springs Solar, LLC ("Seller") to El Paso Electric Company from these facilities is from a renewable energy resource, as defined by the New Mexico Renewable Energy Act, NMSA 1978, Section 62-16-1 et seg., and the NMPRC Rule 572, Renewable Energy For Electric Utilities, 17.9.572 NMAC;

Each kilowatt hour of electricity is generated using a solar fuel source; and
No other Renewable Energy Certificates associated with the renewable energy produced and delivered by Seller to El Paso Electric Company have been traded, sold, retired or otherwise transferred by Seller to any other person or entity.

Macho Springs Solar, LLC
By: Southern Power Company, a Delaware corporation, its manager

By: EWash

Elizabeth Wash
Commercial Markets Manager
Date: June 6, 2024

Invoice

Macho Springs SPC PPA

Macho Springs Solar, LLC

2024 June

Southern Company

El Paso Electric Company

Invoice Date: July 08, 2024 Due Date: August 05, 2024

Invoice For: June 2024

If you have questions, please contact Arnisha Rudolph at 205-992-5654 or Shelley Sewell at 205-992-0382.

	Quantity	Rate	Amounts	Totals
Macho Springs PPA June 2024				
Solar Energy	12547172 Kwh	57.9 $/Mwh		$726,481.26
Test Energy	0 Kwh	38.88 $/Mwh		$0.00
Macho Springs PPA June 2024 Total				$726,481.26
Total Due Macho Springs Solar, LLC				$726,481.26

Information contained in this invoice or report is to be considered "Confidential Information".

The total amount due under the Invoice will be paid to:

[redacted]

[redacted]

TO PREVENT THE POSSIBLITY OF BANK OR WIRING FRAUD: Southern Company and it affiliates will not change or amend its bank details without prior formal notification. Any changes to banking information must be verbally confirmed with a Southern Company Services representative.

RENEWABLE ENERGY CERTIFICATE

Period: For the month of June 2024

Source of REC: Renewable Energy Provider
Macho Springs Solar, LLC
18120 Hatch Hwy NE
Deming, NM 88030

Seller Contact: Kayla Turner
Southern Power Company
3535 Colonnade Parkway
Birmingham, AL 35243
Phone: 251-895-9390
Email: kayturne@southernco.com

Generator type: Solar Energy

Nameplate capacity: 50 MW (ac)

Date of generator start-up: Feb 27, 2014

Fuel source: Solar energy

Revenue Meter manufacturer and identification / serial number: SEL-735, S/N- 1130300490

Location of generator: Macho Springs Solar, LLC
18120 Hatch Hwy NE
Deming, NM

Renewable Energy Purchaser: El Paso Electric Company

Interconnection Utility: El Paso Electric Company

Control Area Operator: El Paso Electric Company

EPE Contact: James Schichtl
P.O. Box 982
El Paso, TX 79960
(915) 521-4697
Fax (915) 521-4605

MONTHLY STATEMENT OF RECS

Renewable Energy delivery for the month of June 2024
Energy Delivered: 12,607,409 kWh

Weighted Value of Energy Delivered kWh: 12,607,409 kWh (multiply by RPS multiplier)

SUPPLIER CERTIFICATION

I, Elizabeth Wash, hereby certify that:

The energy, produced, sold and delivered by Macho Springs Solar, LLC ("Seller") to El Paso Electric Company from these facilities is from a renewable energy resource, as defined by the New Mexico Renewable Energy Act, NMSA 1978, Section 62-16-1 et seg., and the NMPRC Rule 572, Renewable Energy For Electric Utilities, 17.9.572 NMAC;

Each kilowatt hour of electricity is generated using a solar fuel source; and
No other Renewable Energy Certificates associated with the renewable energy produced and delivered by Seller to El Paso Electric Company have been traded, sold, retired or otherwise transferred by Seller to any other person or entity.

Macho Springs Solar, LLC
By: Southern Power Company, a Delaware corporation, its manager

By: EWash

Elizabeth Wash
Commercial Markets Manager
Date: July 2, 2024

Invoice

Macho Springs SPC PPA

Macho Springs Solar, LLC

2024 July

Southern Company

El Paso Electric Company

Invoice Date: August 12, 2024 Due Date: September 10, 2024

Invoice For: July 2024

If you have questions, please contact Arnisha Rudolph at 205-992-5654 or Shelley Sewell at 205-992-0382.

	Quantity	Rate	Amounts	Totals
Macho Springs PPA 14 July 2024				
Solar Energy	13548035 Kwh	57.9 $/Mwh		$784,431.23
Test Energy	0 Kwh	38.88 $/Mwh		$0.00
Macho Springs PPA 14 July 2024 Total				$784,431.23
Total Due Macho Springs Solar, LLC				$784,431.23

Information contained in this invoice or report is to be considered "Confidential Information".

The total amount due under the Invoice will be paid to:

[redacted]

[redacted]

TO PREVENT THE POSSIBLITY OF BANK OR WIRING FRAUD: Southern Company and it affiliates will not change or amend its bank details without prior formal notification. Any changes to banking information must be verbally confirmed with a Southern Company Services representative.

RENEWABLE ENERGY CERTIFICATE

Period: For the month of July 2024

Source of REC: Renewable Energy Provider
Macho Springs Solar, LLC
18120 Hatch Hwy NE
Deming, NM 88030

Seller Contact: Kayla Turner
Southern Power Company
3535 Colonnade Parkway
Birmingham, AL 35243
Phone: 251-895-9390
Email: kayturne@southernco.com

Generator type: Solar Energy

Nameplate capacity: 50 MW (ac)

Date of generator start-up: Feb 27, 2014

Fuel source: Solar energy

Revenue Meter manufacturer and identification / serial number: SEL-735, S/N- 1130300490

Location of generator: Macho Springs Solar, LLC
18120 Hatch Hwy NE
Deming, NM

Renewable Energy Purchaser: El Paso Electric Company

Interconnection Utility: El Paso Electric Company

Control Area Operator: El Paso Electric Company

EPE Contact: James Schichtl
P.O. Box 982
El Paso, TX 79960
(915) 521-4697
Fax (915) 521-4605

MONTHLY STATEMENT OF RECS

Renewable Energy delivery for the month of July 2024
Energy Delivered: 13,607,464 kWh

Weighted Value of Energy Delivered kWh: 13,607,464 kWh (multiply by RPS multiplier)

SUPPLIER CERTIFICATION

I, Elizabeth Wash, hereby certify that:

The energy, produced, sold and delivered by Macho Springs Solar, LLC ("Seller") to El Paso Electric Company from these facilities is from a renewable energy resource, as defined by the New Mexico Renewable Energy Act, NMSA 1978, Section 62-16-1 et seg., and the NMPRC Rule 572, Renewable Energy For Electric Utilities, 17.9.572 NMAC;

Each kilowatt hour of electricity is generated using a solar fuel source; and
No other Renewable Energy Certificates associated with the renewable energy produced and delivered by Seller to El Paso Electric Company have been traded, sold, retired or otherwise transferred by Seller to any other person or entity.

Macho Springs Solar, LLC
By: Southern Power Company, a Delaware corporation, its manager

By: EWash

Elizabeth Wash
Commercial Markets Manager
Date: August 8, 2024

INV022515

Invoice

Macho Springs SPC PPA
Macho Springs Solar, LLC

2024 August

Southern Company

El Paso Electric Company

Invoice Date: September 05, 2024 Due Date: September 20, 2024

Invoice For: August 2024

If you have questions, please contact Arnisha Rudolph at 205-992-5654 or Shelley Sewell at 205-992-0382.

	Quantity	Rate	Amounts	Totals
Macho Springs PPA 14 AUG 2024				
Solar Energy	12907577 Kwh	57.9 $/Mwh		$747,348.71
Test Energy	0 Kwh	38.88 $/Mwh		$0.00
Macho Springs PPA 14 AUG 2024 Total				$747,348.71
Total Due Macho Springs Solar, LLC				$747,348.71

Information contained in this invoice or report is to be considered "Confidential Information".

The total amount due under the Invoice will be paid to:

[redacted]

[redacted]

TO PREVENT THE POSSIBLITY OF BANK OR WIRING FRAUD: Southern Company and it affiliates will not change or amend its bank details without prior formal notification. Any changes to banking information must be verbally confirmed with a Southern Company Services representative.

RENEWABLE ENERGY CERTIFICATE

Period: For the month of August 2024

Source of REC: Renewable Energy Provider
Macho Springs Solar, LLC
18120 Hatch Hwy NE
Deming, NM 88030

Seller Contact: Kayla Turner
Southern Power Company
3535 Colonnade Parkway
Birmingham, AL 35243
Phone: 251-895-9390
Email: kayturne@southernco.com

Generator type: Solar Energy

Nameplate capacity: 50 MW (ac)

Date of generator start-up: Feb 27, 2014

Fuel source: Solar energy

Revenue Meter manufacturer and identification / serial number: SEL-735, S/N- 1130300490

Location of generator: Macho Springs Solar, LLC
18120 Hatch Hwy NE
Deming, NM

Renewable Energy Purchaser: El Paso Electric Company

Interconnection Utility: El Paso Electric Company

Control Area Operator: El Paso Electric Company

EPE Contact: James Schichtl
P.O. Box 982
El Paso, TX 79960
(915) 521-4697
Fax (915) 521-4605

MONTHLY STATEMENT OF RECS

Renewable Energy delivery for the month of August 2024
Energy Delivered: 12,976,462 kWh

Weighted Value of Energy Delivered kWh: 12,976,462 kWh (multiply by RPS multiplier)

SUPPLIER CERTIFICATION

I, Elizabeth Wash, hereby certify that:

The energy, produced, sold and delivered by Macho Springs Solar, LLC ("Seller") to El Paso Electric Company from these facilities is from a renewable energy resource, as defined by the New Mexico Renewable Energy Act, NMSA 1978, Section 62-16-1 et seg., and the NMPRC Rule 572, Renewable Energy For Electric Utilities, 17.9.572 NMAC;

Each kilowatt hour of electricity is generated using a solar fuel source; and
No other Renewable Energy Certificates associated with the renewable energy produced and delivered by Seller to El Paso Electric Company have been traded, sold, retired or otherwise transferred by Seller to any other person or entity.

Macho Springs Solar, LLC
By: Southern Power Company, a Delaware corporation, its manager

By: EWash

Elizabeth Wash
Commercial Markets Manager
Date: September 4, 2024

Invoice

Macho Springs SPC PPA

Macho Springs Solar, LLC

Southern Company

El Paso Electric Company

Invoice Date: October 08, 2024 Due Date: November 06, 2024

Invoice For: September 2024

If you have questions, please contact Arnisha Rudolph at 205-992-5654 or Shelley Sewell at 205-992-0382.

	Quantity	Rate	Amounts	Totals
Macho Springs PPA 14 September 2024				
Solar Energy	12605810 Kwh	57.9 $/Mwh		$729,876.40
Test Energy	0 Kwh	38.88 $/Mwh		$0.00
Macho Springs PPA 14 September 2024 Total				$729,876.40
Total Due Macho Springs Solar, LLC				$729,876.40

Information contained in this invoice or report is to be considered "Confidential Information".

The total amount due under the Invoice will be paid to:

[redacted]

[redacted]

TO PREVENT THE POSSIBLITY OF BANK OR WIRING FRAUD: Southern Company and it affiliates will not change or amend its bank details without prior formal notification. Any changes to banking information must be verbally confirmed with a Southern Company Services representative.

RENEWABLE ENERGY CERTIFICATE

Period: For the month of September 2024

Source of REC: Renewable Energy Provider
Macho Springs Solar, LLC
18120 Hatch Hwy NE
Deming, NM 88030

Seller Contact: Kayla Turner
Southern Power Company
3535 Colonnade Parkway
Birmingham, AL 35243
Phone: 251-895-9390
Email: kayturne@southernco.com

Generator type: Solar Energy

Nameplate capacity: 50 MW (ac)

Date of generator start-up: Feb 27, 2014

Fuel source: Solar energy

Revenue Meter manufacturer and identification / serial number: SEL-735, S/N- 1130300490

Location of generator: Macho Springs Solar, LLC
18120 Hatch Hwy NE
Deming, NM

Renewable Energy Purchaser: El Paso Electric Company

Interconnection Utility: El Paso Electric Company

Control Area Operator: El Paso Electric Company

EPE Contact: James Schichtl
P.O. Box 982
El Paso, TX 79960
(915) 521-4697
Fax (915) 521-4605

MONTHLY STATEMENT OF RECS

Renewable Energy delivery for the month of September 2024
Energy Delivered: 12,675,620 kWh

Weighted Value of Energy Delivered kWh: 12,675,620 kWh (multiply by RPS multiplier)

SUPPLIER CERTIFICATION

I, Elizabeth Wash, hereby certify that:

The energy, produced, sold and delivered by Macho Springs Solar, LLC ("Seller") to El Paso Electric Company from these facilities is from a renewable energy resource, as defined by the New Mexico Renewable Energy Act, NMSA 1978, Section 62-16-1 et seg., and the NMPRC Rule 572, Renewable Energy For Electric Utilities, 17.9.572 NMAC;

Each kilowatt hour of electricity is generated using a solar fuel source; and
No other Renewable Energy Certificates associated with the renewable energy produced and delivered by Seller to El Paso Electric Company have been traded, sold, retired or otherwise transferred by Seller to any other person or entity.

Macho Springs Solar, LLC
By: Southern Power Company, a Delaware corporation, its manager

By: EWash

Elizabeth Wash
Commercial Markets Manager
Date: October 2, 2024

Invoice

Macho Springs SPC PPA
Macho Springs Solar, LLC

2024 October

Southern Company

El Paso Electric Company

Invoice Date: November 07, 2024 Due Date: December 09, 2024

Invoice For: October 2024

If you have questions, please contact Arnisha Rudolph at 205-992-5654 or Shelley Sewell at 205-992-0382.

	Quantity	Rate	Amounts	Totals
Macho Springs PPA 14 102024				
Solar Energy	10788256 Kwh	57.9 $/Mwh		$624,640.02
Test Energy	0 Kwh	38.88 $/Mwh		$0.00
Macho Springs PPA 14 102024 Total				$624,640.02
Total Due Macho Springs Solar, LLC				$624,640.02

Information contained in this invoice or report is to be considered "Confidential Information".

The total amount due under the Invoice will be paid to:

[redacted]

[redacted]

TO PREVENT THE POSSIBLITY OF BANK OR WIRING FRAUD: Southern Company and it affiliates will not change or amend its bank details without prior formal notification. Any changes to banking information must be verbally confirmed with a Southern Company Services representative.

RENEWABLE ENERGY CERTIFICATE

Period: For the month of October 2024

Source of REC: Renewable Energy Provider
Macho Springs Solar, LLC
18120 Hatch Hwy NE
Deming, NM 88030

Seller Contact: Kayla Turner
Southern Power Company
3535 Colonnade Parkway
Birmingham, AL 35243
Phone: 251-895-9390
Email: kayturne@southernco.com

Generator type: Solar Energy

Nameplate capacity: 50 MW (ac)

Date of generator start-up: Feb 27, 2014

Fuel source: Solar energy

Revenue Meter manufacturer and identification / serial number: SEL-735, S/N- 1130300490

Location of generator: Macho Springs Solar, LLC
18120 Hatch Hwy NE
Deming, NM

Renewable Energy Purchaser: El Paso Electric Company

Interconnection Utility: El Paso Electric Company

Control Area Operator: El Paso Electric Company

EPE Contact: James Schichtl
P.O. Box 982
El Paso, TX 79960
(915) 521-4697
Fax (915) 521-4605

MONTHLY STATEMENT OF RECS

Renewable Energy delivery for the month of October 2024
Energy Delivered: 10,864,184 kWh

Weighted Value of Energy Delivered kWh: 10,864,184 kWh (multiply by RPS multiplier)

SUPPLIER CERTIFICATION

I, Elizabeth Wash, hereby certify that:

The energy, produced, sold and delivered by Macho Springs Solar, LLC ("Seller") to El Paso Electric Company from these facilities is from a renewable energy resource, as defined by the New Mexico Renewable Energy Act, NMSA 1978, Section 62-16-1 et seg., and the NMPRC Rule 572, Renewable Energy For Electric Utilities, 17.9.572 NMAC;

Each kilowatt hour of electricity is generated using a solar fuel source; and
No other Renewable Energy Certificates associated with the renewable energy produced and delivered by Seller to El Paso Electric Company have been traded, sold, retired or otherwise transferred by Seller to any other person or entity.

Macho Springs Solar, LLC
By: Southern Power Company, a Delaware corporation, its manager

By: EWash

Elizabeth Wash
Commercial Markets Manager
Date: November 5, 2024

INV023081

Invoice

Macho Springs SPC PPA
Macho Springs Solar, LLC

2024 November

Southern Company

El Paso Electric Company

Invoice Date:	December 03, 2024	Due Date:	January 06, 2025
Invoice For:	November 2024		

If you have questions, please contact Arnisha Rudolph at 205-992-5654 or Shelley Sewell at 205-992-0382.

	Quantity	Rate	Amounts	Totals
Macho Springs PPA 14 112024				
Solar Energy	7961919 Kwh	57.9 $/Mwh		$460,995.11
Test Energy	0 Kwh	38.88 $/Mwh		$0.00
Macho Springs PPA 14 112024 Total				$460,995.11
Total Due Macho Springs Solar, LLC				$460,995.11

Information contained in this invoice or report is to be considered "Confidential Information".

The total amount due under the Invoice will be paid to:

[redacted]

[redacted]

TO PREVENT THE POSSIBLITY OF BANK OR WIRING FRAUD: Southern Company and it affiliates will not change or amend its bank details without prior formal notification. Any changes to banking information must be verbally confirmed with a Southern Company Services representative.

RENEWABLE ENERGY CERTIFICATE

Period: For the month of November 2024

Source of REC: Renewable Energy Provider
Macho Springs Solar, LLC
18120 Hatch Hwy NE
Deming, NM 88030

Seller Contact: Kayla Turner
Southern Power Company
3535 Colonnade Parkway
Birmingham, AL 35243
Phone: 251-895-9390
Email: kayturne@southernco.com

Generator type: Solar Energy

Nameplate capacity: 50 MW (ac)

Date of generator start-up: Feb 27, 2014

Fuel source: Solar energy

Revenue Meter manufacturer and identification / serial number: SEL-735, S/N- 1130300490

Location of generator: Macho Springs Solar, LLC
18120 Hatch Hwy NE
Deming, NM

Renewable Energy Purchaser: El Paso Electric Company

Interconnection Utility: El Paso Electric Company

Control Area Operator: El Paso Electric Company

EPE Contact: James Schichtl
P.O. Box 982
El Paso, TX 79960
(915) 521-4697
Fax (915) 521-4605

MONTHLY STATEMENT OF RECS

Renewable Energy delivery for the month of November 2024
Energy Delivered: 8,043,089 kWh

Weighted Value of Energy Delivered kWh: 8,043,089 kWh (multiply by RPS multiplier)

SUPPLIER CERTIFICATION

I, Elizabeth Wash, hereby certify that:

The energy, produced, sold and delivered by Macho Springs Solar, LLC ("Seller") to El Paso Electric Company from these facilities is from a renewable energy resource, as defined by the New Mexico Renewable Energy Act, NMSA 1978, Section 62-16-1 et seg., and the NMPRC Rule 572, Renewable Energy For Electric Utilities, 17.9.572 NMAC;

Each kilowatt hour of electricity is generated using a solar fuel source; and
No other Renewable Energy Certificates associated with the renewable energy produced and delivered by Seller to El Paso Electric Company have been traded, sold, retired or otherwise transferred by Seller to any other person or entity.

Macho Springs Solar, LLC
By: Southern Power Company, a Delaware corporation, its manager

By: EWash

Elizabeth Wash
Commercial Markets Manager
Date: December 3, 2024

INV023274

Invoice

Macho Springs SPC PPA
Macho Springs Solar, LLC

2024 December

Southern Company

El Paso Electric Company

Invoice Date: January 16, 2025 Due Date: February 14, 2025

Invoice For: December 2024

If you have questions, please contact Arnisha Rudolph at 205-992-5654 or Shelley Sewell at 205-992-0382.

	Quantity	Rate	Amounts	Totals
Macho Springs PPA 14 122024				
Solar Energy	6967546 Kwh	57.9 $/Mwh		$403,420.91
Test Energy	0 Kwh	38.88 $/Mwh		$0.00
Macho Springs PPA 14 122024 Total				$403,420.91
Total Due Macho Springs Solar, LLC				$403,420.91

Information contained in this invoice or report is to be considered "Confidential Information".

The total amount due under the Invoice will be paid to:

[redacted]

[redacted]

TO PREVENT THE POSSIBLITY OF BANK OR WIRING FRAUD: Southern Company and it affiliates will not change or amend its bank details without prior formal notification. Any changes to banking information must be verbally confirmed with a Southern Company Services representative.

RENEWABLE ENERGY CERTIFICATE

Period: For the month of December 2024

Source of REC: Renewable Energy Provider
Macho Springs Solar, LLC
18120 Hatch Hwy NE
Deming, NM 88030

Seller Contact: Kayla Turner
Southern Power Company
3535 Colonnade Parkway
Birmingham, AL 35243
Phone: 251-895-9390
Email: kayturne@southernco.com

Generator type: Solar Energy

Nameplate capacity: 50 MW (ac)

Date of generator start-up: Feb 27, 2014

Fuel source: Solar energy

Revenue Meter manufacturer and identification / serial number: SEL-735, S/N- 1130300490

Location of generator: Macho Springs Solar, LLC
18120 Hatch Hwy NE
Deming, NM

Renewable Energy Purchaser: El Paso Electric Company

Interconnection Utility: El Paso Electric Company

Control Area Operator: El Paso Electric Company

EPE Contact: James Schichtl
P.O. Box 982
El Paso, TX 79960
(915) 521-4697
Fax (915) 521-4605

MONTHLY STATEMENT OF RECS

Renewable Energy delivery for the month of December 2024
Energy Delivered: 7,054,157 kWh

Weighted Value of Energy Delivered kWh: 7,054,157 kWh (multiply by RPS multiplier)

SUPPLIER CERTIFICATION

I, Elizabeth Wash, hereby certify that:

The energy, produced, sold and delivered by Macho Springs Solar, LLC ("Seller") to El Paso Electric Company from these facilities is from a renewable energy resource, as defined by the New Mexico Renewable Energy Act, NMSA 1978, Section 62-16-1 et seg., and the NMPRC Rule 572, Renewable Energy For Electric Utilities, 17.9.572 NMAC;

Each kilowatt hour of electricity is generated using a solar fuel source; and
No other Renewable Energy Certificates associated with the renewable energy produced and delivered by Seller to El Paso Electric Company have been traded, sold, retired or otherwise transferred by Seller to any other person or entity.

Macho Springs Solar, LLC
By: Southern Power Company, a Delaware corporation, its manager

By: EWash

Elizabeth Wash
Commercial Markets Manager
Date: January 10, 2024

ATTACHMENT 6

Monthly Biogas Energy Purchase Documentation –
Four Peaks Energy, LLC, Camino Real Landfill Gas to Energy
Facility ("CRLEF")

Four Peaks Energy, LLC - CRLEF

Source: Four Peaks Energy, LLC Statements

2024	Purchased Power RECs Purchased kWh	Delivered Energy kWh		Energy $		Total $
January	502,365	361,117	$	24,592.07	$	24,592.07
February	1,637,616	1,356,089	$	125,194.14	$	125,194.14
March	1,471,847	1,193,994	$	124,569.39	$	124,569.39
April	1,484,441	1,140,238	$	102,575.81	$	102,575.81
May	817,846	840,922	$	139,054.86	$	139,054.86
June	1,255,724	1,100,751	$	187,720.31	$	187,720.31
July	1,403,681	1,316,838	$	51,524.20	$	51,524.20
August	1,260,422	1,042,988	$	30,401.14	$	30,401.14
September	995,553	648,584	$	15,089.35	$	15,089.35
October	1,330,833	935,491	$	26,121.72	$	26,121.72
November	1,212,348	882,203	$	20,692.95	$	20,692.95
December	1,295,589	931,572	$	30,719.52	$	30,719.52
Total	14,668,265	11,750,787	$	878,255.46	$	878,255.46

Send Correspondence To:
CUSTOMER SERVICE
P. O. Box 982
El Paso, TX 79960 - 0982
TX - (915) 543-5970
NM- (575) 526-5555
www.epelectric.com

Account Number [redacted]
Billing Date 02/02/2024

FOUR PEAKS ENERGY LLC

Account Summary		
Previous Balance	$	(130,293.87)
Payments		0.00
Balance Forward		(130,293.87)
Adjustments		130,293.87
Current Billing Charges		(18,390.04)
Account Balance	**$**	**(18,390.04)**

Payment options are available. Chat with us at epelectric.com or call us at 915-543-5970 in TX or 575-526-5555 in NM.

Service Address: [redacted]

New Mexico - General Service 01/03/2024 - 02/01/2024

- - - Purchased Power Service - - -

Customer Charge					26.00
Demand Charge - Non-Summer - Secondary	480 kW	@	$12.53	6,014.40	
Advanced Metering System Rider	1 Meter(s)	@	$1.07		1.07
Total Demand Charges					6,014.40
Federal Tax Credit					(42.47)
Efficient Use Of Energy Recovery Factor					203.03
Purchased Power - Secondary - Off Peak	361,117 kWh	@	$-0.0681		(24,592.07)
				$	(18,390.04)

Adjustments

02/02/2024	Refund - Renewable Energy Certificate	$	130293.87

090/001 801727/4259108 0007419 1 I=0000000000

Keep This Portion For Your Records
Return This Portion With Your Payment

Billing Date 02/02/2024
Account Number [redacted]

Bright Hearts donation enclosed	
Amount enclosed	

[redacted]

000007419 I=000000

FOUR PEAKS ENERGY LLC
[redacted]

El Paso Electric
P. O. Box 650801
Dallas, TX 75265-0801

[redacted]

Your Rights as a Customer

El Paso Electric (EPE) is dedicated to providing quality, reliable service to you, our valued customer. This booklet is presented as a summary of your rights as a customer and other useful information regarding your service with EPE. Please visit the EPE website at www.epelectric.com to access the "Your Rights as a Customer" booklet.

Energy Efficiency Programs

Energy Efficiency programs are designed to result in cost savings and benefit the environment. For every $1.00 spent on these programs, customers typically save nearly double that amount over time on the cost of providing electricity, and program participants will save even more. Learn more about these programs and rebates that may be available to you at www.epelectric.com.

Renewable Portfolio Standard Recovery

This Rider is established to recover Renewable Portfolio Standard (RPS) compliance costs.

Additional Information Used For Billing

Bill Determinants	
Pulse kWh	0

For the Month of: **January, 2024** El Paso Electric Meter #16470755

RENEWABLE ENERGY CERTIFICATE

Renewable Energy Generated: 502,365 kWh

Renewable Energy Provider: Four Peaks Energy LLC.
QF FERC File Docket: QF06-224-002
Generator Type: 2 x Caterpillar 3520C
Nameplate Capacity: 3.2 MW
Fuel Source: Landfill Gas
Generation Meter Manufacture and Identification of Serial Number: CAT EMCP SN#15850009HE & 15760019HE

Location of Generator: Four Peaks Energy Plant, Camino Real Environmental Center,
1001 Camino Real Blvd, Sunland Park, New Mexico 88063

Contact: Bryan Black, Manager, Four Peaks Energy LLC.
250 E. 200 S. Suite 310 SLC, UT. 84111
Ph: (801) 310-8151

Renewable Energy Purchaser: El Paso Electric Company
Interconnection Utility: El Paso Electric Company
Control Area Operator: El Paso Electric Company

EPE Contact: Brad Green, PO Box 982, El Paso, TX 79960
Ph: (915) 521-4475, Mbl: (915) 526-3978

I Bryan Black hereby certify that:

The energy generated, sold, and delivered by Four Peaks Energy, LLC. to El Paso Electric Company from this facility is from a renewable energy resource, as defined by the New Mexico Renewable Act, NMSA 1978, Section 62-16-1 et seq., and the NMPRC Rule 572, Renewable Energy For Electric Utilities, 17.9.572 NMAC;

Each kilowatt-hour of electricity is generated using biomass and/or landfill gas fuel sources, thus representing one (1) kilowatt-hour toward compliance with the renewable portfolio standard set forth in the New Mexico Renewable Energy Act and NMPRC Rule 572;

No other Renewable Energy Certificate(s) associated with the renewable energy produced and delivered by Four Peaks Energy, LLC to El Paso Electric Company have been traded, sold, or otherwise transferred by Four Peaks Energy, LLC to any other person or entity.

By:

Bryan Black, Plant Operator
February 9th, 2024

Send Correspondence To:
CUSTOMER SERVICE
P. O. Box 982
El Paso, TX 79960 - 0982
TX - (915) 543-5970
NM- (575) 526-5555
www.epelectric.com

Account Number [redacted]
Billing Date 03/04/2024

FOUR PEAKS ENERGY LLC

Account Summary		
Previous Balance	$	(91,006.35)
Payments		0.00
Balance Forward		(91,006.35)
Bill Corrections		91,006.35
Current Billing Charges		(123,850.83)
Account Balance	**$**	**(123,850.83)**

Service Address: [redacted]

New Mexico - General Service 02/02/2024 - 03/01/2024

- - - Purchased Power Service - - -					
Customer Charge					26.00
Demand Charge - Non-Summer - Secondary	102 kW	@	$12.53	1,278.06	
Advanced Metering System Rider	1 Meter(s)	@	$4.45		4.45
Total Demand Charges					1,278.06
Federal Tax Credit					(9.17)
Efficient Use Of Energy Recovery Factor					43.97
Purchased Power - Secondary - Off Peak	1,356,089 kWh	@	$-0.09232		(125,194.14)
				$	(123,850.83)

Payment options are available. Chat with us at epelectric.com or call us at 915-543-5970 in TX or 575-526-5555 in NM.

090/001 809111/4266703 0007448 1 I=000000000

Keep This Portion For Your Records
Return This Portion With Your Payment

Billing Date 03/04/2024
Account Number [redacted]

Bright Hearts donation enclosed	
Amount enclosed	

[redacted]

000007448 I=000000

FOUR PEAKS ENERGY LLC
[redacted]

El Paso Electric
P. O. Box 650801
Dallas, TX 75265-0801

[redacted]

Your Rights as a Customer

El Paso Electric (EPE) is dedicated to providing quality, reliable service to you, our valued customer. This booklet is presented as a summary of your rights as a customer and other useful information regarding your service with EPE. Please visit the EPE website at www.epelectric.com to access the "Your Rights as a Customer" booklet.

Energy Efficiency Programs

Energy Efficiency programs are designed to result in cost savings and benefit the environment. For every $1.00 spent on these programs, customers typically save nearly double that amount over time on the cost of providing electricity, and program participants will save even more. Learn more about these programs and rebates that may be available to you at www.epelectric.com.

Renewable Portfolio Standard Recovery

This Rider is established to recover Renewable Portfolio Standard (RPS) compliance costs.

Additional Information Used For Billing

Bill Determinants	
Pulse kWh	0

RENEWABLE ENERGY CERTIFICATE

Renewable Energy Generated: 1,637,616 kWh

Renewable Energy Provider: Four Peaks Energy LLC.
QF FERC File Docket: QF06-224-002
Generator Type: 2 x Caterpillar 3520C
Nameplate Capacity: 3.2 MW
Fuel Source: Landfill Gas
Generation Meter Manufacture and Identification of Serial Number: CAT EMCP SN#15850009HE & 15760019HE

Location of Generator: Four Peaks Energy Plant, Camino Real Environmental Center,
1001 Camino Real Blvd, Sunland Park, New Mexico 88063

Contact: Bryan Black, Manager, Four Peaks Energy LLC.
250 E. 200 S. Suite 310 SLC, UT. 84111
Ph: (801) 310-8151

Renewable Energy Purchaser: El Paso Electric Company
Interconnection Utility: El Paso Electric Company
Control Area Operator: El Paso Electric Company

EPE Contact: Brad Green, PO Box 982, El Paso, TX 79960
Ph: (915) 521-4475, Mbl: (915) 526-3978

I Bryan Black hereby certify that:

The energy generated, sold, and delivered by Four Peaks Energy, LLC. to El Paso Electric Company from this facility is from a renewable energy resource, as defined by the New Mexico Renewable Act, NMSA 1978, Section 62-16-1 et seq., and the NMPRC Rule 572, Renewable Energy For Electric Utilities, 17.9.572 NMAC;

Each kilowatt-hour of electricity is generated using biomass and/or landfill gas fuel sources, thus representing one (1) kilowatt-hour toward compliance with the renewable portfolio standard set forth in the New Mexico Renewable Energy Act and NMPRC Rule 572;

No other Renewable Energy Certificate(s) associated with the renewable energy produced and delivered by Four Peaks Energy, LLC to El Paso Electric Company have been traded, sold, or otherwise transferred by Four Peaks Energy, LLC to any other person or entity.

By:

Bryan Black, Plant Operator
March 7th, 2024

Send Correspondence To:
CUSTOMER SERVICE
P. O. Box 982
El Paso, TX 79960 - 0982
TX - (915) 543-5970
NM- (575) 526-5555
www.epelectric.com

Account Number [redacted]
Billing Date 04/02/2024

FOUR PEAKS ENERGY LLC

Account Summary		
Previous Balance	$	(123,850.83)
Payments		0.00
Balance Forward		(123,850.83)
Adjustments		123,850.83
Current Billing Charges		(123,894.95)
Account Balance	**$**	**(123,894.95)**

Payment options are available. Chat with us at epelectric.com or call us at 915-543-5970 in TX or 575-526-5555 in NM.

Service Address: [redacted]

New Mexico - General Service 03/02/2024 - 04/01/2024

- - - Purchased Power Service - - -					
Customer Charge					26.00
Demand Charge - Non-Summer - Secondary	50 kW	@	$12.53	626.50	
Advanced Metering System Rider	1 Meter(s)	@	$4.45		4.45
Total Demand Charges					626.50
Federal Tax Credit					(4.59)
Efficient Use Of Energy Recovery Factor					22.08
Purchased Power - Secondary - Off Peak	1,193,994 kWh	@	$-0.10433		(124,569.39)
				$	(123,894.95)

Adjustments

04/02/2024	Refund - Renewable Energy Certificate	$	123850.83

090/001 816469/4274406 0007458 1 I=000000000

Keep This Portion For Your Records
Return This Portion With Your Payment

Billing Date 04/02/2024
Account Number [redacted]

Bright Hearts donation enclosed	
Amount enclosed	

[redacted]

000007458 I=000000

FOUR PEAKS ENERGY LLC
[redacted]

El Paso Electric
P. O. Box 650801
Dallas, TX 75265-0801

[redacted]

Your Rights as a Customer

El Paso Electric (EPE) is dedicated to providing quality, reliable service to you, our valued customer. This booklet is presented as a summary of your rights as a customer and other useful information regarding your service with EPE. Please visit the EPE website at www.epelectric.com to access the "Your Rights as a Customer" booklet.

Energy Efficiency Programs

Energy Efficiency programs are designed to result in cost savings and benefit the environment. For every $1.00 spent on these programs, customers typically save nearly double that amount over time on the cost of providing electricity, and program participants will save even more. Learn more about these programs and rebates that may be available to you at www.epelectric.com.

Renewable Portfolio Standard Recovery

This Rider is established to recover Renewable Portfolio Standard (RPS) compliance costs.

Additional Information Used For Billing

Bill Determinants	
Pulse kWh	0

RENEWABLE ENERGY CERTIFICATE

Renewable Energy Generated: 1,471,847 kWh

Renewable Energy Provider: Four Peaks Energy LLC.
QF FERC File Docket: QF06-224-002
Generator Type: 2 x Caterpillar 3520C
Nameplate Capacity: 3.2 MW
Fuel Source: Landfill Gas
Generation Meter Manufacture and Identification of Serial Number: CAT EMCP SN#15850009HE & 15760019HE

Location of Generator: Four Peaks Energy Plant, Camino Real Environmental Center,
1001 Camino Real Blvd, Sunland Park, New Mexico 88063

Contact: Bryan Black, Manager, Four Peaks Energy LLC.
250 E. 200 S. Suite 310 SLC, UT. 84111
Ph: (801) 310-8151

Renewable Energy Purchaser: El Paso Electric Company
Interconnection Utility: El Paso Electric Company
Control Area Operator: El Paso Electric Company

EPE Contact: Brad Green, PO Box 982, El Paso, TX 79960
Ph: (915) 521-4475, Mbl: (915) 526-3978

I Bryan Black hereby certify that:

The energy generated, sold, and delivered by Four Peaks Energy, LLC. to El Paso Electric Company from this facility is from a renewable energy resource, as defined by the New Mexico Renewable Act, NMSA 1978, Section 62-16-1 et seq., and the NMPRC Rule 572, Renewable Energy For Electric Utilities, 17.9.572 NMAC;

Each kilowatt-hour of electricity is generated using biomass and/or landfill gas fuel sources, thus representing one (1) kilowatt-hour toward compliance with the renewable portfolio standard set forth in the New Mexico Renewable Energy Act and NMPRC Rule 572;

No other Renewable Energy Certificate(s) associated with the renewable energy produced and delivered by Four Peaks Energy, LLC to El Paso Electric Company have been traded, sold, or otherwise transferred by Four Peaks Energy, LLC to any other person or entity.

By:

Bryan Black, Plant Operator
April 5th, 2024

Send Correspondence To:
CUSTOMER SERVICE
P. O. Box 982
El Paso, TX 79960 - 0982
TX - (915) 543-5970
NM- (575) 526-5555
www.epelectric.com

Account Number [redacted]
Billing Date 05/02/2024

FOUR PEAKS ENERGY LLC

Account Summary		
Previous Balance	$	(123,894.95)
Payments		0.00
Balance Forward		(123,894.95)
Adjustments		123,894.95
Current Billing Charges		(101,901.37)
Account Balance	**$**	**(101,901.37)**

Service Address: [redacted]

Payment options are available. Chat with us at epelectric.com or call us at 915-543-5970 in TX or 575-526-5555 in NM.

New Mexico - General Service 04/02/2024 - 05/01/2024

- - - Purchased Power Service - - -					
Customer Charge					26.00
Demand Charge - Non-Summer - Secondary	50 kW	@	$12.53	626.50	
Advanced Metering System Rider	1 Meter(s)	@	$4.45		4.45
Total Demand Charges					626.50
Federal Tax Credit					(4.59)
Efficient Use Of Energy Recovery Factor					22.08
Purchased Power - Secondary - Off Peak	1,140,238 kWh	@	$-0.08996		(102,575.81)
				$	(101,901.37)

Adjustments

05/02/2024	Refund - Renewable Energy Certificate	$	123894.95

090/001 824101/4282374 0005568 1 I=000000000

Keep This Portion For Your Records
Return This Portion With Your Payment

Billing Date 05/02/2024
Account Number [redacted]

Bright Hearts donation enclosed	
Amount enclosed	

[redacted]

000005568 I=000000

FOUR PEAKS ENERGY LLC
[redacted]

El Paso Electric
P. O. Box 650801
Dallas, TX 75265-0801

[redacted]

Your Rights as a Customer

El Paso Electric (EPE) is dedicated to providing quality, reliable service to you, our valued customer. This booklet is presented as a summary of your rights as a customer and other useful information regarding your service with EPE. Please visit the EPE website at www.epelectric.com to access the "Your Rights as a Customer" booklet.

Energy Efficiency Programs

Energy Efficiency programs are designed to result in cost savings and benefit the environment. For every $1.00 spent on these programs, customers typically save nearly double that amount over time on the cost of providing electricity, and program participants will save even more. Learn more about these programs and rebates that may be available to you at www.epelectric.com.

Renewable Portfolio Standard Recovery

This Rider is established to recover Renewable Portfolio Standard (RPS) compliance costs.

Additional Information Used For Billing

Bill Determinants	
Pulse kWh	0

RENEWABLE ENERGY CERTIFICATE

Renewable Energy Generated: 1,484,441 kWh

Renewable Energy Provider: Four Peaks Energy LLC.
QF FERC File Docket: QF06-224-002
Generator Type: 2 x Caterpillar 3520C
Nameplate Capacity: 3.2 MW
Fuel Source: Landfill Gas
Generation Meter Manufacture and Identification of Serial Number: CAT EMCP SN#15850009HE & 15760019HE

Location of Generator: Four Peaks Energy Plant, Camino Real Environmental Center,
1001 Camino Real Blvd, Sunland Park, New Mexico 88063

Contact: Bryan Black, Manager, Four Peaks Energy LLC.
250 E. 200 S. Suite 310 SLC, UT. 84111
Ph: (801) 310-8151

Renewable Energy Purchaser: El Paso Electric Company
Interconnection Utility: El Paso Electric Company
Control Area Operator: El Paso Electric Company

EPE Contact: Brad Green, PO Box 982, El Paso, TX 79960
Ph: (915) 521-4475, Mbl: (915) 526-3978

I Bryan Black hereby certify that:

The energy generated, sold, and delivered by Four Peaks Energy, LLC. to El Paso Electric Company from this facility is from a renewable energy resource, as defined by the New Mexico Renewable Act, NMSA 1978, Section 62-16-1 et seq., and the NMPRC Rule 572, Renewable Energy For Electric Utilities, 17.9.572 NMAC;

Each kilowatt-hour of electricity is generated using biomass and/or landfill gas fuel sources, thus representing one (1) kilowatt-hour toward compliance with the renewable portfolio standard set forth in the New Mexico Renewable Energy Act and NMPRC Rule 572;

No other Renewable Energy Certificate(s) associated with the renewable energy produced and delivered by Four Peaks Energy, LLC to El Paso Electric Company have been traded, sold, or otherwise transferred by Four Peaks Energy, LLC to any other person or entity.

By:

Bryan Black, Plant Operator
May 14th, 2024

Send Correspondence To:
CUSTOMER SERVICE
P. O. Box 982
El Paso, TX 79960 - 0982
TX - (915) 543-5970
NM- (575) 526-5555
www.epelectric.com

Account Number [redacted]
Billing Date 06/04/2024

FOUR PEAKS ENERGY LLC

Account Summary		
Previous Balance	$	(101,901.37)
Payments		0.00
Balance Forward		(101,901.37)
Adjustments		101,901.37
Current Billing Charges		(137,900.61)
Account Balance	**$**	**(137,900.61)**

Service Address: [redacted]

Payment options are available. Chat with us at epelectric.com or call us at 915-543-5970 in TX or 575-526-5555 in NM.

New Mexico - General Service 05/02/2024 - 06/03/2024

- - - Purchased Power Service - - -

Customer Charge					26.00
Demand Charge - Summer - Secondary	58 kW	@	$18.86	1,093.88	
Advanced Metering System Rider	1 Meter(s)	@	$4.45		4.45
Total Demand Charges					1,093.88
Federal Tax Credit					(7.87)
Efficient Use Of Energy Recovery Factor					37.79
Purchased Power - Secondary - Off Peak	840,922 kWh	@	$-0.16536		(139,054.86)
				$	(137,900.61)

Adjustments

06/04/2024	Transfer Funds From One Service To Another	$	101901.37

NM C&I Small Service - Renewab

NM C&I Small Service - Renewab

Adjustments

06/04/2024	Refund - Renewable Energy Certificate	$	101901.37
06/04/2024	Refund - Renewable Energy Certificate	$	101901.37
06/04/2024	Refund - Renewable Energy Certificate	$	101901.37
06/04/2024	Refund - Renewable Energy Certificate	$	101901.37

090/001 831953/4290620 0007639 1 I=0000000000

Keep This Portion For Your Records
Return This Portion With Your Payment

Billing Date 06/04/2024
Account Number [redacted]

Bright Hearts donation enclosed	
Amount enclosed	

[redacted]

000007639 I=000000

FOUR PEAKS ENERGY LLC
[redacted]

El Paso Electric
P. O. Box 650801
Dallas, TX 75265-0801

[redacted]

Your Rights as a Customer

El Paso Electric (EPE) is dedicated to providing quality, reliable service to you, our valued customer. This booklet is presented as a summary of your rights as a customer and other useful information regarding your service with EPE. Please visit the EPE website at www.epelectric.com to access the "Your Rights as a Customer" booklet.

Energy Efficiency Programs

Energy Efficiency programs are designed to result in cost savings and benefit the environment. For every $1.00 spent on these programs, customers typically save nearly double that amount over time on the cost of providing electricity, and program participants will save even more. Learn more about these programs and rebates that may be available to you at www.epelectric.com.

Renewable Portfolio Standard Recovery

This Rider is established to recover Renewable Portfolio Standard (RPS) compliance costs.

Additional Information Used For Billing

Bill Determinants	
Pulse kWh	0

RENEWABLE ENERGY CERTIFICATE

Renewable Energy Generated: 817,846 kWh

Renewable Energy Provider: Four Peaks Energy LLC.
QF FERC File Docket: QF06-224-002
Generator Type: 2 x Caterpillar 3520C
Nameplate Capacity: 3.2 MW
Fuel Source: Landfill Gas
Generation Meter Manufacture and Identification of Serial Number: CAT EMCP SN#15850009HE & 15760019HE

Location of Generator: Four Peaks Energy Plant, Camino Real Environmental Center,
1001 Camino Real Blvd, Sunland Park, New Mexico 88063

Contact: Bryan Black, Manager, Four Peaks Energy LLC.
250 E. 200 S. Suite 310 SLC, UT. 84111
Ph: (801) 310-8151

Renewable Energy Purchaser: El Paso Electric Company
Interconnection Utility: El Paso Electric Company
Control Area Operator: El Paso Electric Company

EPE Contact: Brad Green, PO Box 982, El Paso, TX 79960
Ph: (915) 521-4475, Mbl: (915) 526-3978

I Bryan Black hereby certify that:

The energy generated, sold, and delivered by Four Peaks Energy, LLC. to El Paso Electric Company from this facility is from a renewable energy resource, as defined by the New Mexico Renewable Act, NMSA 1978, Section 62-16-1 et seq., and the NMPRC Rule 572, Renewable Energy For Electric Utilities, 17.9.572 NMAC;

Each kilowatt-hour of electricity is generated using biomass and/or landfill gas fuel sources, thus representing one (1) kilowatt-hour toward compliance with the renewable portfolio standard set forth in the New Mexico Renewable Energy Act and NMPRC Rule 572;

No other Renewable Energy Certificate(s) associated with the renewable energy produced and delivered by Four Peaks Energy, LLC to El Paso Electric Company have been traded, sold, or otherwise transferred by Four Peaks Energy, LLC to any other person or entity.

By:

Bryan Black, Plant Operator
June 10th, 2024

Send Correspondence To:
CUSTOMER SERVICE
P. O. Box 982
El Paso, TX 79960 - 0982
TX - (915) 543-5970
NM- (575) 526-5555
www.epelectric.com

Account Number [redacted]
Billing Date 07/05/2024

FOUR PEAKS ENERGY LLC

Account Summary		
Previous Balance	$	(137,900.61)
Payments		0.00
Balance Forward		(137,900.61)
Adjustments		137,900.61
Current Billing Charges		(186,604.79)
Account Balance	**$**	**(186,604.79)**

Payment options are available. Chat with us at epelectric.com or call us at 915-543-5970 in TX or 575-526-5555 in NM.

Service Address: [redacted]

New Mexico - General Service 06/04/2024 - 07/01/2024

- - - Purchased Power Service - - -

Customer Charge					26.00
Demand Charge - Summer - Secondary	56 kW	@	$18.86	1,056.16	
Advanced Metering System Rider	1 Meter(s)	@	$4.45		4.45
Total Demand Charges					1,056.16
Federal Tax Credit					(7.61)
Efficient Use Of Energy Recovery Factor					36.52
Purchased Power - Secondary - On Peak	120,520 kWh	@	$-0.17508		(21,100.64)
Purchased Power - Secondary - Off Peak	980,231 kWh	@	$-0.16998		(166,619.67)
				$	(186,604.79)

Adjustments

07/05/2024	Transfer Funds From One Service To Another	$	137900.61

NM C&I Small Service - Renewab

NM C&I Small Service - Renewab

Adjustments

07/05/2024	Transfer Funds From One Service To Another	$	(137900.61)
07/05/2024	Transfer Funds From One Service To Another	$	(137900.61)
07/05/2024	Transfer Funds From One Service To Another	$	(137900.61)

090/001 839802/4298659 0001003 1 I=0000000000

Keep This Portion For Your Records
Return This Portion With Your Payment

Billing Date 07/05/2024
Account Number [redacted]

Bright Hearts donation enclosed	
Amount enclosed	

[redacted]

000001003 I=000000

FOUR PEAKS ENERGY LLC
[redacted]

El Paso Electric
P. O. Box 650801
Dallas, TX 75265-0801

[redacted]

Your Rights as a Customer

El Paso Electric (EPE) is dedicated to providing quality, reliable service to you, our valued customer. This booklet is presented as a summary of your rights as a customer and other useful information regarding your service with EPE. Please visit the EPE website at www.epelectric.com to access the "Your Rights as a Customer" booklet.

Energy Efficiency Programs

Energy Efficiency programs are designed to result in cost savings and benefit the environment. For every $1.00 spent on these programs, customers typically save nearly double that amount over time on the cost of providing electricity, and program participants will save even more. Learn more about these programs and rebates that may be available to you at www.epelectric.com.

Renewable Portfolio Standard Recovery

This Rider is established to recover Renewable Portfolio Standard (RPS) compliance costs.

Additional Information Used For Billing

Bill Determinants	
Pulse kWh	0

RENEWABLE ENERGY CERTIFICATE

Renewable Energy Generated: 1,255,724 kWh

Renewable Energy Provider: Four Peaks Energy LLC.
QF FERC File Docket: QF06-224-002
Generator Type: 2 x Caterpillar 3520C
Nameplate Capacity: 3.2 MW
Fuel Source: Landfill Gas
Generation Meter Manufacture and Identification of Serial Number: CAT EMCP SN#15850009HE & 15760019HE

Location of Generator: Four Peaks Energy Plant, Camino Real Environmental Center,
1001 Camino Real Blvd, Sunland Park, New Mexico 88063

Contact: Bryan Black, Manager, Four Peaks Energy LLC.
250 E. 200 S. Suite 310 SLC, UT. 84111
Ph: (801) 310-8151

Renewable Energy Purchaser: El Paso Electric Company
Interconnection Utility: El Paso Electric Company
Control Area Operator: El Paso Electric Company

EPE Contact: Brad Green, PO Box 982, El Paso, TX 79960
Ph: (915) 521-4475, Mbl: (915) 526-3978

I Bryan Black hereby certify that:

The energy generated, sold, and delivered by Four Peaks Energy, LLC. to El Paso Electric Company from this facility is from a renewable energy resource, as defined by the New Mexico Renewable Act, NMSA 1978, Section 62-16-1 et seq., and the NMPRC Rule 572, Renewable Energy For Electric Utilities, 17.9.572 NMAC;

Each kilowatt-hour of electricity is generated using biomass and/or landfill gas fuel sources, thus representing one (1) kilowatt-hour toward compliance with the renewable portfolio standard set forth in the New Mexico Renewable Energy Act and NMPRC Rule 572;

No other Renewable Energy Certificate(s) associated with the renewable energy produced and delivered by Four Peaks Energy, LLC to El Paso Electric Company have been traded, sold, or otherwise transferred by Four Peaks Energy, LLC to any other person or entity.

By:

Bryan Black, Plant Operator
July 2nd, 2024

Send Correspondence To:
CUSTOMER SERVICE
P. O. Box 982
El Paso, TX 79960 - 0982
TX - (915) 543-5970
NM- (575) 526-5555
www.epelectric.com

Account Number [redacted]
Billing Date 08/05/2024

FOUR PEAKS ENERGY LLC

Account Summary		
Previous Balance	$	(186,604.79)
Payments		0.00
Balance Forward		(186,604.79)
Adjustments		186,604.79
Current Billing Charges		(50,408.68)
Account Balance	**$**	**(50,408.68)**

Payment options are available. Chat with us at epelectric.com or call us at 915-543-5970 in TX or 575-526-5555 in NM.

Service Address: [redacted]

New Mexico - General Service 07/02/2024 - 08/01/2024

- - - Purchased Power Service - - -					
Customer Charge					26.00
Demand Charge - Summer - Secondary	56 kW	@	$18.86	1,056.16	
Advanced Metering System Rider	1 Meter(s)	@	$4.45		4.45
Total Demand Charges					1,056.16
Federal Tax Credit					(7.61)
Efficient Use Of Energy Recovery Factor					36.52
Purchased Power - Secondary - On Peak	152,418 kWh	@	$-0.056807		(8,658.41)
Purchased Power - Secondary - Off Peak	1,164,420 kWh	@	$-0.036813		(42,865.79)
				$	(50,408.68)

Adjustments

08/05/2024	Refund - Renewable Energy Certificate	$	186604.79

090/001 847768/4306488 0014481 1 I=000000000

Keep This Portion For Your Records
Return This Portion With Your Payment

Billing Date 08/05/2024
Account Number [redacted]

Bright Hearts donation enclosed	
Amount enclosed	

[redacted]

000014481 I=000000

FOUR PEAKS ENERGY LLC
[redacted]

El Paso Electric
P. O. Box 650801
Dallas, TX 75265-0801

[redacted]

Your Rights as a Customer

El Paso Electric (EPE) is dedicated to providing quality, reliable service to you, our valued customer. This booklet is presented as a summary of your rights as a customer and other useful information regarding your service with EPE. Please visit the EPE website at www.epelectric.com to access the "Your Rights as a Customer" booklet.

Energy Efficiency Programs

Energy Efficiency programs are designed to result in cost savings and benefit the environment. For every $1.00 spent on these programs, customers typically save nearly double that amount over time on the cost of providing electricity, and program participants will save even more. Learn more about these programs and rebates that may be available to you at www.epelectric.com.

Renewable Portfolio Standard Recovery

This Rider is established to recover Renewable Portfolio Standard (RPS) compliance costs.

Additional Information Used For Billing

Bill Determinants	
Pulse kWh	0

RENEWABLE ENERGY CERTIFICATE

Renewable Energy Generated: 1,403,681 kWh

Renewable Energy Provider: Four Peaks Energy LLC.
QF FERC File Docket: QF06-224-002
Generator Type: 2 x Caterpillar 3520C
Nameplate Capacity: 3.2 MW
Fuel Source: Landfill Gas
Generation Meter Manufacture and Identification of Serial Number: CAT EMCP SN#15850009HE & 15760019HE

Location of Generator: Four Peaks Energy Plant, Camino Real Environmental Center,
1001 Camino Real Blvd, Sunland Park, New Mexico 88063

Contact: Bryan Black, Manager, Four Peaks Energy LLC.
250 E. 200 S. Suite 310 SLC, UT. 84111
Ph: (801) 310-8151

Renewable Energy Purchaser: El Paso Electric Company
Interconnection Utility: El Paso Electric Company
Control Area Operator: El Paso Electric Company

EPE Contact: Brad Green, PO Box 982, El Paso, TX 79960
Ph: (915) 521-4475, Mbl: (915) 526-3978

I Bryan Black hereby certify that:

The energy generated, sold, and delivered by Four Peaks Energy, LLC. to El Paso Electric Company from this facility is from a renewable energy resource, as defined by the New Mexico Renewable Act, NMSA 1978, Section 62-16-1 et seq., and the NMPRC Rule 572, Renewable Energy For Electric Utilities, 17.9.572 NMAC;

Each kilowatt-hour of electricity is generated using biomass and/or landfill gas fuel sources, thus representing one (1) kilowatt-hour toward compliance with the renewable portfolio standard set forth in the New Mexico Renewable Energy Act and NMPRC Rule 572;

No other Renewable Energy Certificate(s) associated with the renewable energy produced and delivered by Four Peaks Energy, LLC to El Paso Electric Company have been traded, sold, or otherwise transferred by Four Peaks Energy, LLC to any other person or entity.

By:
Bryan Black
Bryan Black, Plant Operator
August 12th, 2024

Send Correspondence To:
CUSTOMER SERVICE
P. O. Box 982
El Paso, TX 79960 - 0982
TX - (915) 543-5970
NM- (575) 526-5555
www.epelectric.com

Account Number [redacted]
Billing Date **09/06/2024**

FOUR PEAKS ENERGY LLC

Account Summary		
Previous Balance	$	(50,408.68)
Payments		0.00
Balance Forward		(50,408.68)
Adjustments		50,408.68
Current Billing Charges		(29,401.79)
Account Balance	**$**	**(29,401.79)**

Service Address: [redacted]

Payment options are available. Chat with us at epelectric.com or call us at 915-543-5970 in TX or 575-526-5555 in NM.

New Mexico - General Service 08/02/2024 - 09/03/2024

- - - Purchased Power Service - - -					
Customer Charge					26.00
Demand Charge - Summer - Secondary	50 kW	@	$18.86	943.00	
Advanced Metering System Rider	1 Meter(s)	@	$4.45		4.45
Total Demand Charges					943.00
Federal Tax Credit					(6.81)
Efficient Use Of Energy Recovery Factor					32.71
Purchased Power - Secondary - On Peak	128,211 kWh	@	$-0.044589		(5,716.80)
Purchased Power - Secondary - Off Peak	914,777 kWh	@	$-0.026984		(24,684.34)
				$	(29,401.79)

Adjustments

09/06/2024	Refund - Renewable Energy Certificate	$	50408.68

090/001 855412/4314328 0006329 1 I=0000000000

Keep This Portion For Your Records
Return This Portion With Your Payment

Billing Date 09/06/2024
Account Number [redacted]

Bright Hearts donation enclosed	
Amount enclosed	

[redacted]

000006329 I=000000

FOUR PEAKS ENERGY LLC
[redacted]

El Paso Electric
P. O. Box 650801
Dallas, TX 75265-0801

[redacted]

Your Rights as a Customer

El Paso Electric (EPE) is dedicated to providing quality, reliable service to you, our valued customer. This booklet is presented as a summary of your rights as a customer and other useful information regarding your service with EPE. Please visit the EPE website at www.epelectric.com to access the "Your Rights as a Customer" booklet.

Energy Efficiency Programs

Energy Efficiency programs are designed to result in cost savings and benefit the environment. For every $1.00 spent on these programs, customers typically save nearly double that amount over time on the cost of providing electricity, and program participants will save even more. Learn more about these programs and rebates that may be available to you at www.epelectric.com.

Renewable Portfolio Standard Recovery

This Rider is established to recover Renewable Portfolio Standard (RPS) compliance costs.

Additional Information Used For Billing

Bill Determinants	
Pulse kWh	0

RENEWABLE ENERGY CERTIFICATE

Renewable Energy Generated: 1,260,422 kWh

Renewable Energy Provider: Four Peaks Energy LLC.
QF FERC File Docket: QF06-224-002
Generator Type: 2 x Caterpillar 3520C
Nameplate Capacity: 3.2 MW
Fuel Source: Landfill Gas
Generation Meter Manufacture and Identification of Serial Number: CAT EMCP SN#15850009HE & 15760019HE

Location of Generator: Four Peaks Energy Plant, Camino Real Environmental Center,
1001 Camino Real Blvd, Sunland Park, New Mexico 88063

Contact: Bryan Black, Manager, Four Peaks Energy LLC.
250 E. 200 S. Suite 310 SLC, UT. 84111
Ph: (801) 310-8151

Renewable Energy Purchaser: El Paso Electric Company
Interconnection Utility: El Paso Electric Company
Control Area Operator: El Paso Electric Company

EPE Contact: Brad Green, PO Box 982, El Paso, TX 79960
Ph: (915) 521-4475, Mbl: (915) 526-3978

I Bryan Black hereby certify that:

The energy generated, sold, and delivered by Four Peaks Energy, LLC. to El Paso Electric Company from this facility is from a renewable energy resource, as defined by the New Mexico Renewable Act, NMSA 1978, Section 62-16-1 et seq., and the NMPRC Rule 572, Renewable Energy For Electric Utilities, 17.9.572 NMAC;

Each kilowatt-hour of electricity is generated using biomass and/or landfill gas fuel sources, thus representing one (1) kilowatt-hour toward compliance with the renewable portfolio standard set forth in the New Mexico Renewable Energy Act and NMPRC Rule 572;

No other Renewable Energy Certificate(s) associated with the renewable energy produced and delivered by Four Peaks Energy, LLC to El Paso Electric Company have been traded, sold, or otherwise transferred by Four Peaks Energy, LLC to any other person or entity.

By:

Bryan Black, Plant Operator
September 16th, 2024

Send Correspondence To:
CUSTOMER SERVICE
P. O. Box 982
El Paso, TX 79960 - 0982
TX - (915) 543-5970
NM- (575) 526-5555
www.epelectric.com

Account Number [redacted]
Billing Date 10/02/2024

FOUR PEAKS ENERGY LLC

Account Summary		
Previous Balance	$	(29,401.79)
Payments		0.00
Balance Forward		(29,401.79)
Adjustments		29,401.79
Current Billing Charges		(14,306.52)
Account Balance	**$**	**(14,306.52)**

Service Address: [redacted]

Payment options are available. Chat with us at epelectric.com or call us at 915-543-5970 in TX or 575-526-5555 in NM.

New Mexico - General Service 09/04/2024 - 10/01/2024

- - - Purchased Power Service - - -					
Customer Charge					26.00
Demand Charge - Non-Summer - Secondary	58 kW	@	$12.53	726.74	
Advanced Metering System Rider	1 Meter(s)	@	$4.45		4.45
Total Demand Charges					726.74
Efficient Use Of Energy Recovery Factor					25.63
Purchased Power - Secondary - On Peak	76,017 kWh	@	$-0.041335		(3,142.16)
Purchased Power - Secondary - Off Peak	572,567 kWh	@	$-0.020866		(11,947.18)
				$	(14,306.52)

Adjustments

10/02/2024	Refund - Renewable Energy Certificate	$	29401.79

090/001 861302/4320501 0000150 1 I=0000000000

Keep This Portion For Your Records
Return This Portion With Your Payment

Billing Date 10/02/2024
Account Number [redacted]

Bright Hearts donation enclosed	
Amount enclosed	

[redacted]

000000150 I=000000

FOUR PEAKS ENERGY LLC
[redacted]

El Paso Electric
P. O. Box 650801
Dallas, TX 75265-0801

[redacted]

Your Rights as a Customer

El Paso Electric (EPE) is dedicated to providing quality, reliable service to you, our valued customer. This booklet is presented as a summary of your rights as a customer and other useful information regarding your service with EPE. Please visit the EPE website at www.epelectric.com to access the "Your Rights as a Customer" booklet.

Energy Efficiency Programs

Energy Efficiency programs are designed to result in cost savings and benefit the environment. For every $1.00 spent on these programs, customers typically save nearly double that amount over time on the cost of providing electricity, and program participants will save even more. Learn more about these programs and rebates that may be available to you at www.epelectric.com.

Renewable Portfolio Standard Recovery

This Rider is established to recover Renewable Portfolio Standard (RPS) compliance costs.

Additional Information Used For Billing

Bill Determinants	
Pulse kWh	0

RENEWABLE ENERGY CERTIFICATE

Renewable Energy Generated: 995,553 kWh

Renewable Energy Provider: Four Peaks Energy LLC.
QF FERC File Docket: QF06-224-002
Generator Type: 2 x Caterpillar 3520C
Nameplate Capacity: 3.2 MW
Fuel Source: Landfill Gas
Generation Meter Manufacture and Identification of Serial Number: CAT EMCP SN#15850009HE & 15760019HE

Location of Generator: Four Peaks Energy Plant, Camino Real Environmental Center,
1001 Camino Real Blvd, Sunland Park, New Mexico 88063

Contact: Bryan Black, Manager, Four Peaks Energy LLC.
250 E. 200 S. Suite 310 SLC, UT. 84111
Ph: (801) 310-8151

Renewable Energy Purchaser: El Paso Electric Company
Interconnection Utility: El Paso Electric Company
Control Area Operator: El Paso Electric Company

EPE Contact: Brad Green, PO Box 982, El Paso, TX 79960
Ph: (915) 521-4475, Mbl: (915) 526-3978

I Bryan Black hereby certify that:

The energy generated, sold, and delivered by Four Peaks Energy, LLC. to El Paso Electric Company from this facility is from a renewable energy resource, as defined by the New Mexico Renewable Act, NMSA 1978, Section 62-16-1 et seq., and the NMPRC Rule 572, Renewable Energy For Electric Utilities, 17.9.572 NMAC;

Each kilowatt-hour of electricity is generated using biomass and/or landfill gas fuel sources, thus representing one (1) kilowatt-hour toward compliance with the renewable portfolio standard set forth in the New Mexico Renewable Energy Act and NMPRC Rule 572;

No other Renewable Energy Certificate(s) associated with the renewable energy produced and delivered by Four Peaks Energy, LLC to El Paso Electric Company have been traded, sold, or otherwise transferred by Four Peaks Energy, LLC to any other person or entity.

By:

Bryan Black, Plant Operator
October 9th, 2024

Send Correspondence To:
CUSTOMER SERVICE
P. O. Box 982
El Paso, TX 79960 - 0982
TX - (915) 543-5970
NM- (575) 526-5555
www.epelectric.com

Account Number [redacted]
Billing Date **11/01/2024**

FOUR PEAKS ENERGY LLC

Account Summary		
Previous Balance	$	(14,306.52)
Payments		0.00
Balance Forward		(14,306.52)
Adjustments		14,306.52
Current Billing Charges		(25,442.54)
Account Balance	**$**	**(25,442.54)**

Service Address: [redacted]

Payment options are available. Chat with us at epelectric.com or call us at 915-543-5970 in TX or 575-526-5555 in NM.

New Mexico - General Service 10/02/2024 - 11/01/2024

- - - Purchased Power Service - - -					
Customer Charge					26.00
Demand Charge - Non-Summer - Secondary	50 kW	@	$12.53	626.50	
Advanced Metering System Rider	1 Meter(s)	@	$4.45		4.45
Total Demand Charges					626.50
Efficient Use Of Energy Recovery Factor					22.23
Purchased Power - Secondary - Off Peak	935,491 kWh	@	$-0.027923		(26,121.72)
				$	(25,442.54)

Adjustments

11/01/2024	Refund - Renewable Energy Certificate	$	14306.52

090/001 868025/4327346 0006627 1 I=000000000

Keep This Portion For Your Records
Return This Portion With Your Payment

Billing Date 11/01/2024
Account Number [redacted]

Bright Hearts donation enclosed	
Amount enclosed	

[redacted]

000006627 I=000000

FOUR PEAKS ENERGY LLC
[redacted]

El Paso Electric
P. O. Box 650801
Dallas, TX 75265-0801

[redacted]

Your Rights as a Customer

El Paso Electric (EPE) is dedicated to providing quality, reliable service to you, our valued customer. This booklet is presented as a summary of your rights as a customer and other useful information regarding your service with EPE. Please visit the EPE website at www.epelectric.com to access the "Your Rights as a Customer" booklet.

Energy Efficiency Programs

Energy Efficiency programs are designed to result in cost savings and benefit the environment. For every $1.00 spent on these programs, customers typically save nearly double that amount over time on the cost of providing electricity, and program participants will save even more. Learn more about these programs and rebates that may be available to you at www.epelectric.com.

Renewable Portfolio Standard Recovery

This Rider is established to recover Renewable Portfolio Standard (RPS) compliance costs.

Additional Information Used For Billing

Bill Determinants	
Pulse kWh	0

RENEWABLE ENERGY CERTIFICATE

Renewable Energy Generated: 1,330,833 kWh

Renewable Energy Provider: Four Peaks Energy LLC.
QF FERC File Docket: QF06-224-002
Generator Type: 2 x Caterpillar 3520C
Nameplate Capacity: 3.2 MW
Fuel Source: Landfill Gas
Generation Meter Manufacture and Identification of Serial Number: CAT EMCP SN#15850009HE & 15760019HE

Location of Generator: Four Peaks Energy Plant, Camino Real Environmental Center,
1001 Camino Real Blvd, Sunland Park, New Mexico 88063

Contact: Bryan Black, Manager, Four Peaks Energy LLC.
250 E. 200 S. Suite 310 SLC, UT. 84111
Ph: (801) 310-8151

Renewable Energy Purchaser: El Paso Electric Company
Interconnection Utility: El Paso Electric Company
Control Area Operator: El Paso Electric Company

EPE Contact: Brad Green, PO Box 982, El Paso, TX 79960
Ph: (915) 521-4475, Mbl: (915) 526-3978

I Bryan Black hereby certify that:

The energy generated, sold, and delivered by Four Peaks Energy, LLC. to El Paso Electric Company from this facility is from a renewable energy resource, as defined by the New Mexico Renewable Act, NMSA 1978, Section 62-16-1 et seq., and the NMPRC Rule 572, Renewable Energy For Electric Utilities, 17.9.572 NMAC;

Each kilowatt-hour of electricity is generated using biomass and/or landfill gas fuel sources, thus representing one (1) kilowatt-hour toward compliance with the renewable portfolio standard set forth in the New Mexico Renewable Energy Act and NMPRC Rule 572;

No other Renewable Energy Certificate(s) associated with the renewable energy produced and delivered by Four Peaks Energy, LLC to El Paso Electric Company have been traded, sold, or otherwise transferred by Four Peaks Energy, LLC to any other person or entity.

By:

Bryan Black, Plant Operator
November 11th, 2024

Send Correspondence To:
CUSTOMER SERVICE
P. O. Box 982
El Paso, TX 79960 - 0982
TX - (915) 543-5970
NM- (575) 526-5555
www.epelectric.com

Account Number [redacted]
Billing Date **12/03/2024**

FOUR PEAKS ENERGY LLC

Account Summary		
Previous Balance	$	(25,442.54)
Payments		0.00
Balance Forward		(25,442.54)
Adjustments		25,456.96
Current Billing Charges		(20,013.77)
Account Balance	**$**	**(19,999.35)**

Service Address: [redacted]

Attention: Our check payment mailing address will change in 2025. Details to come.

Payment options are available. Chat with us at epelectric.com or call us at 915-543-5970 in TX or 575-526-5555 in NM.

New Mexico - General Service 11/02/2024 - 12/02/2024

- - - Purchased Power Service - - -					
Customer Charge					26.00
Demand Charge - Non-Summer - Secondary	50 kW	@	$12.53	626.50	
Advanced Metering System Rider	1 Meter(s)	@	$4.45		4.45
Total Demand Charges					626.50
Efficient Use Of Energy Recovery Factor					22.23
Purchased Power - Secondary - Off Peak	882,203 kWh	@	$-0.023456		(20,692.95)
				$	(20,013.77)

Adjustments

12/03/2024	New Mexico Federal Tax Credit Reversal	$	14.42

090/001 874010/4333687 0007617 1 I=000000000

Keep This Portion For Your Records
Return This Portion With Your Payment

Billing Date 12/03/2024
Account Number [redacted]

Bright Hearts donation enclosed	
Amount enclosed	

[redacted]

000007617 I=000000

FOUR PEAKS ENERGY LLC
[redacted]

El Paso Electric
P. O. Box 650801
Dallas, TX 75265-0801

[redacted]

Your Rights as a Customer

El Paso Electric (EPE) is dedicated to providing quality, reliable service to you, our valued customer. This booklet is presented as a summary of your rights as a customer and other useful information regarding your service with EPE. Please visit the EPE website at www.epelectric.com to access the "Your Rights as a Customer" booklet.

Energy Efficiency Programs

Energy Efficiency programs are designed to result in cost savings and benefit the environment. For every $1.00 spent on these programs, customers typically save nearly double that amount over time on the cost of providing electricity, and program participants will save even more. Learn more about these programs and rebates that may be available to you at www.epelectric.com.

Renewable Portfolio Standard Recovery

This Rider is established to recover Renewable Portfolio Standard (RPS) compliance costs.

Additional Information Used For Billing

Bill Determinants	
Pulse kWh	0

RENEWABLE ENERGY CERTIFICATE

Renewable Energy Generated: 1,212,348 kWh

Renewable Energy Provider: Four Peaks Energy LLC.
QF FERC File Docket: QF06-224-002
Generator Type: 2 x Caterpillar 3520C
Nameplate Capacity: 3.2 MW
Fuel Source: Landfill Gas
Generation Meter Manufacture and Identification of Serial Number: CAT EMCP SN#15850009HE & 15760019HE

Location of Generator: Four Peaks Energy Plant, Camino Real Environmental Center,
1001 Camino Real Blvd, Sunland Park, New Mexico 88063

Contact: Bryan Black, Manager, Four Peaks Energy LLC.
250 E. 200 S. Suite 310 SLC, UT. 84111
Ph: (801) 310-8151

Renewable Energy Purchaser: El Paso Electric Company
Interconnection Utility: El Paso Electric Company
Control Area Operator: El Paso Electric Company

EPE Contact: Brad Green, PO Box 982, El Paso, TX 79960
Ph: (915) 521-4475, Mbl: (915) 526-3978

I Bryan Black hereby certify that:

The energy generated, sold, and delivered by Four Peaks Energy, LLC. to El Paso Electric Company from this facility is from a renewable energy resource, as defined by the New Mexico Renewable Act, NMSA 1978, Section 62-16-1 et seq., and the NMPRC Rule 572, Renewable Energy For Electric Utilities, 17.9.572 NMAC;

Each kilowatt-hour of electricity is generated using biomass and/or landfill gas fuel sources, thus representing one (1) kilowatt-hour toward compliance with the renewable portfolio standard set forth in the New Mexico Renewable Energy Act and NMPRC Rule 572;

No other Renewable Energy Certificate(s) associated with the renewable energy produced and delivered by Four Peaks Energy, LLC to El Paso Electric Company have been traded, sold, or otherwise transferred by Four Peaks Energy, LLC to any other person or entity.

By:

Bryan Black, Plant Operator
December 12th, 2024

Send Correspondence To:
CUSTOMER SERVICE
P. O. Box 982
El Paso, TX 79960 - 0982
TX - (915) 543-5970
NM- (575) 526-5555
www.epelectric.com

Account Number [redacted]
Billing Date 01/03/2025

FOUR PEAKS ENERGY LLC

Account Summary		
Previous Balance	$	(19,999.35)
Payments		0.00
Balance Forward		(19,999.35)
Adjustments		19,999.35
Current Billing Charges		(30,040.34)
Account Balance	**$**	**(30,040.34)**

Service Address: [redacted]

Attention: Our check payment mailing address will change in 2025. Details to come.

Payment options are available. Chat with us at epelectric.com or call us at 915-543-5970 in TX or 575-526-5555 in NM.

New Mexico - General Service 12/03/2024 - 01/02/2025

- - - Purchased Power Service - - -					
Customer Charge					26.00
Demand Charge - Non-Summer - Secondary	50 kW	@	$12.53	626.50	
Advanced Metering System Rider	1 Meter(s)	@	$4.45		4.45
Total Demand Charges					626.50
Efficient Use Of Energy Recovery Factor					22.23
Purchased Power - Secondary - Off Peak	931,572 kWh	@	$-0.032976		(30,719.52)
				$	(30,040.34)

Adjustments

01/03/2025	Refund - Renewable Energy Certificate	$	19999.35

090/001 880131/4339883 0007618 1 I=0000000000

Keep This Portion For Your Records
Return This Portion With Your Payment

Billing Date 01/03/2025
Account Number [redacted]

Bright Hearts donation enclosed	
Amount enclosed	

[redacted]

000007618 I=000000

FOUR PEAKS ENERGY LLC
[redacted]

El Paso Electric
P. O. Box 650801
Dallas, TX 75265-0801

[redacted]

Your Rights as a Customer

El Paso Electric (EPE) is dedicated to providing quality, reliable service to you, our valued customer. This booklet is presented as a summary of your rights as a customer and other useful information regarding your service with EPE. Please visit the EPE website at www.epelectric.com to access the "Your Rights as a Customer" booklet.

Energy Efficiency Programs

Energy Efficiency programs are designed to result in cost savings and benefit the environment. For every $1.00 spent on these programs, customers typically save nearly double that amount over time on the cost of providing electricity, and program participants will save even more. Learn more about these programs and rebates that may be available to you at www.epelectric.com.

Renewable Portfolio Standard Recovery

This Rider is established to recover Renewable Portfolio Standard (RPS) compliance costs.

Additional Information Used For Billing

Bill Determinants	
Pulse kWh	0

RENEWABLE ENERGY CERTIFICATE

Renewable Energy Generated: 1,295,589 kWh

Renewable Energy Provider: Four Peaks Energy LLC.
QF FERC File Docket: QF06-224-002
Generator Type: 2 x Caterpillar 3520C
Nameplate Capacity: 3.2 MW
Fuel Source: Landfill Gas
Generation Meter Manufacture and Identification of Serial Number: CAT EMCP SN#15850009HE & 15760019HE

Location of Generator: Four Peaks Energy Plant, Camino Real Environmental Center,
1001 Camino Real Blvd, Sunland Park, New Mexico 88063

Contact: Bryan Black, Manager, Four Peaks Energy LLC.
250 E. 200 S. Suite 310 SLC, UT. 84111
Ph: (801) 310-8151

Renewable Energy Purchaser: El Paso Electric Company
Interconnection Utility: El Paso Electric Company
Control Area Operator: El Paso Electric Company

EPE Contact: Brad Green, PO Box 982, El Paso, TX 79960
Ph: (915) 521-4475, Mbl: (915) 526-3978

I Bryan Black hereby certify that:

The energy generated, sold, and delivered by Four Peaks Energy, LLC. to El Paso Electric Company from this facility is from a renewable energy resource, as defined by the New Mexico Renewable Act, NMSA 1978, Section 62-16-1 et seq., and the NMPRC Rule 572, Renewable Energy For Electric Utilities, 17.9.572 NMAC;

Each kilowatt-hour of electricity is generated using biomass and/or landfill gas fuel sources, thus representing one (1) kilowatt-hour toward compliance with the renewable portfolio standard set forth in the New Mexico Renewable Energy Act and NMPRC Rule 572;

No other Renewable Energy Certificate(s) associated with the renewable energy produced and delivered by Four Peaks Energy, LLC to El Paso Electric Company have been traded, sold, or otherwise transferred by Four Peaks Energy, LLC to any other person or entity.

By:

Bryan Black, Plant Operator
January 13th, 2025

ATTACHMENT 7

Monthly Solar Energy Purchase Documentation –
Holloman Atlas Solar Array – Holloman Air Force Base

Renewable Facility	Holloman Air Force Base (HAFB)
Fuel type	Solar
Rated Capacity (KW)	5,000
MONTH	
JANUARY	190,929
FEBRUARY	258,502
MARCH	342,536
APRIL	418,043
MAY	469,274
JUNE	356,214
JULY	231,267
AUGUST	300,329
SEPTEMBER	302,641
OCTOBER	179,490
NOVEMBER	114,342
DECEMBER	105,338
2024 Cumulative to Date Generation (in kWh)	3,268,905

Send Correspondence To:
CUSTOMER SERVICE
P. O. Box 982
El Paso, TX 79960 - 0982
TX - (915) 543-5970
NM- (575) 526-5555
www.epelectric.com

Account Number	
Billing Date	**01/17/2024**
Amount Due 02/24/2024	**$ 86,900.72**

OFFICE AD CONT OFF 49 CES CENPE

Account Summary		
Previous Balance	$	180,992.40
Payments		(180,992.40)
Balance Forward		0.00
Current Billing Charges		86,900.72
Account Balance	**$**	**86,900.72**

Service Address: [redacted]

New Mexico - Military Research and Development - Holloman AFB 12/19/2023 - 01/16/202

Customer Charge -	2 Meters	@	$220.00		440.00
Energy Charge - Transmission - Off Peak	524,221 kWh	@	$0.0014	733.91	
Total Energy Charges					733.91
Demand Charge - Transmission	7,627 kW	@	$8.17		62,312.59
Federal Tax Credit					(446.37)
Fuel & Purchased Power Cost Adjustment - Trans 115KV	350,830 kWh	@	$0.01822		6,392.12
Renewable Portfolio Standard Recovery	350,830 kWh	@	$0.008335		2,924.17
Energy Charge - Solar PV	177,977 kWh	@	$0.08338		14,839.72
Transportation Electrification Plan Recovery	350,830 kWh	@	$0.000124		43.50
Facility Lease Payment					(338.92)
				$	86,900.72

090/001 796456/4253926 0019776 1 I=0000000000

Keep This Portion For Your Records
Return This Portion With Your Payment

Amount Due 02/24/2024: $ 86,900.72

Billing Date 01/17/2024
Account Number [redacted]

Bright Hearts donation enclosed	
Amount enclosed	

[redacted]

000019776 I=000000

OFFICE AD CONT OFF 49 CES CENPE
[redacted]

El Paso Electric
P. O. Box 650801
Dallas, TX 75265-0801

[redacted]

Your Rights as a Customer

El Paso Electric (EPE) is dedicated to providing quality, reliable service to you, our valued customer. This booklet is presented as a summary of your rights as a customer and other useful information regarding your service with EPE. Please visit the EPE website at www.epelectric.com to access the "Your Rights as a Customer" booklet.

Energy Efficiency Programs

Energy Efficiency programs are designed to result in cost savings and benefit the environment. For every $1.00 spent on these programs, customers typically save nearly double that amount over time on the cost of providing electricity, and program participants will save even more. Learn more about these programs and rebates that may be available to you at www.epelectric.com.

Renewable Portfolio Standard Recovery

This Rider is established to recover Renewable Portfolio Standard (RPS) compliance costs.

Additional Information Used For Billing

Bill Determinants	
Pulse kWh	350,830

Send Correspondence To:
CUSTOMER SERVICE
P. O. Box 982
El Paso, TX 79960 - 0982
TX - (915) 543-5970
NM- (575) 526-5555
www.epelectric.com

Account Number		
Billing Date		**02/19/2024**
Previous Balance	**$**	**179,528.93**
Amount Due 03/24/2024	**$**	**170,167.32**
Total Amount Due	**$**	**349,696.25**

OFFICE AD CONT OFF 49 CES CENPE

Account Summary

Previous Balance	$	179,528.93
Payments		0.00
Balance Forward		179,528.93
Current Billing Charges		170,167.32
Account Balance	**$**	**349,696.25**

Service Address: [redacted]

New Mexico - Military Research and Development - Holloman AFB 01/17/2024 - 02/15/202

Customer Charge -	2 Meters	@	$220.00		440.00
Energy Charge - Transmission - Off Peak	4,136,548 kWh	@	$0.0014	5,791.17	
Total Energy Charges					5,791.17
Demand Charge - Transmission	7,561 kW	@	$8.17		61,773.37
Federal Tax Credit					(478.14)
Fuel & Purchased Power Cost Adjustment - Trans 115KV	3,915,384 kWh	@	$0.012607		49,361.25
Renewable Portfolio Standard Recovery	3,915,384 kWh	@	$0.008752		34,267.44
Energy Charge - Solar PV	226,261 kWh	@	$0.08338		18,865.64
Transportation Electrification Plan Recovery	3,915,384 kWh	@	$0.000124		485.51
Facility Lease Payment					(338.92)
				$	170,167.32

090/001 805344/4262817 0020612 1 I=000000000

Keep This Portion For Your Records
Return This Portion With Your Payment

Previous Balance	$	179,528.93	Billing Date	02/19/2024
Amount Due 03/24/2024:	$	170,167.32	Account Number	[redacted]
Total Amount Due:	$	349,696.25		

Bright Hearts donation enclosed	
Amount enclosed	

[redacted]

000020612 I=000000

OFFICE AD CONT OFF 49 CES CENPE
[redacted]

El Paso Electric
P. O. Box 650801
Dallas, TX 75265-0801

[redacted]

Your Rights as a Customer

El Paso Electric (EPE) is dedicated to providing quality, reliable service to you, our valued customer. This booklet is presented as a summary of your rights as a customer and other useful information regarding your service with EPE. Please visit the EPE website at www.epelectric.com to access the "Your Rights as a Customer" booklet.

Energy Efficiency Programs

Energy Efficiency programs are designed to result in cost savings and benefit the environment. For every $1.00 spent on these programs, customers typically save nearly double that amount over time on the cost of providing electricity, and program participants will save even more. Learn more about these programs and rebates that may be available to you at www.epelectric.com.

Renewable Portfolio Standard Recovery

This Rider is established to recover Renewable Portfolio Standard (RPS) compliance costs.

Additional Information Used For Billing

Bill Determinants	
Pulse kWh	3,915,384

Send Correspondence To:
CUSTOMER SERVICE
P. O. Box 982
El Paso, TX 79960 - 0982
TX - (915) 543-5970
NM- (575) 526-5555
www.epelectric.com

Account Number	
Billing Date	**03/19/2024**
Amount Due 04/24/2024	**$ 125,301.08**

OFFICE AD CONT OFF 49 CES CENPE

Account Summary		
Previous Balance	$	349,696.25
Payments		(349,842.12)
Balance Forward		(145.87)
Current Billing Charges		125,446.95
Account Balance	**$**	**125,301.08**

Service Address: [redacted]

New Mexico - Military Research and Development - Holloman AFB 02/16/2024 - 03/15/202

Customer Charge -	2 Meters	@	$220.00		440.00
Energy Charge - Transmission - Off Peak	3,789,012 kWh	@	$0.0014	5,304.62	
Total Energy Charges					5,304.62
Demand Charge - Transmission	7,561 kW	@	$8.17		61,773.37
Federal Tax Credit					(474.72)
Fuel & Purchased Power Cost Adjustment - Trans 115KV	3,490,959 kWh	@	$0.000736		2,569.35
Renewable Portfolio Standard Recovery	3,490,959 kWh	@	$0.008752		30,552.87
Energy Charge - Solar PV	303,295 kWh	@	$0.08338		25,288.74
Transportation Electrification Plan Recovery	3,490,959 kWh	@	$0.000095		331.64
Facility Lease Payment					(338.92)
				$	125,446.95

090/001 812886/4270622 0020164 1 I=0000000000

Keep This Portion For Your Records
Return This Portion With Your Payment

Amount Due 04/24/2024: $ 125,301.08

Billing Date 03/19/2024
Account Number [redacted]

Bright Hearts donation enclosed	
Amount enclosed	

[redacted]

000020164 I=000000

OFFICE AD CONT OFF 49 CES CENPE
[redacted]

El Paso Electric
P. O. Box 650801
Dallas, TX 75265-0801

[redacted]

Your Rights as a Customer

El Paso Electric (EPE) is dedicated to providing quality, reliable service to you, our valued customer. This booklet is presented as a summary of your rights as a customer and other useful information regarding your service with EPE. Please visit the EPE website at www.epelectric.com to access the "Your Rights as a Customer" booklet.

Energy Efficiency Programs

Energy Efficiency programs are designed to result in cost savings and benefit the environment. For every $1.00 spent on these programs, customers typically save nearly double that amount over time on the cost of providing electricity, and program participants will save even more. Learn more about these programs and rebates that may be available to you at www.epelectric.com.

Renewable Portfolio Standard Recovery

This Rider is established to recover Renewable Portfolio Standard (RPS) compliance costs.

Additional Information Used For Billing

Bill Determinants	
Pulse kWh	3,490,959

Send Correspondence To:
CUSTOMER SERVICE
P. O. Box 982
El Paso, TX 79960 - 0982
TX - (915) 543-5970
NM- (575) 526-5555
www.epelectric.com

Account Number	
Billing Date	**04/16/2024**
Amount Due 05/24/2024	**$ 123,878.09**

OFFICE AD CONT OFF 49 CES CENPE

Account Summary		
Previous Balance	$	125,301.08
Payments		(125,301.08)
Balance Forward		0.00
Current Billing Charges		123,878.09
Account Balance	**$**	**123,878.09**

Service Address: [redacted]

New Mexico - Military Research and Development - Holloman AFB 03/16/2024 - 04/15/202

Customer Charge -	2 Meters	@	$220.00		440.00
Energy Charge - Transmission - Off Peak	3,852,380 kWh	@	$0.0014	5,393.33	
Total Energy Charges					5,393.33
Demand Charge - Transmission	7,561 kW	@	$8.17		61,773.37
Federal Tax Credit					(475.34)
Fuel & Purchased Power Cost Adjustment - Trans 115KV	3,490,959 kWh	@	$-0.001233		(4,304.35)
Renewable Portfolio Standard Recovery	3,490,959 kWh	@	$0.008752		30,552.87
Energy Charge - Solar PV	365,861 kWh	@	$0.08338		30,505.49
Transportation Electrification Plan Recovery	3,490,959 kWh	@	$0.000095		331.64
Facility Lease Payment					(338.92)
				$	123,878.09

090/001 819913/4278021 0020172 1 I=0000000000

Keep This Portion For Your Records
Return This Portion With Your Payment

Amount Due 05/24/2024: $ 123,878.09

Billing Date 04/16/2024
Account Number [redacted]

Bright Hearts donation enclosed	
Amount enclosed	

[redacted]

000020172 I=000000

OFFICE AD CONT OFF 49 CES CENPE
[redacted]

El Paso Electric
P. O. Box 650801
Dallas, TX 75265-0801

[redacted]

Your Rights as a Customer

El Paso Electric (EPE) is dedicated to providing quality, reliable service to you, our valued customer. This booklet is presented as a summary of your rights as a customer and other useful information regarding your service with EPE. Please visit the EPE website at www.epelectric.com to access the "Your Rights as a Customer" booklet.

Energy Efficiency Programs

Energy Efficiency programs are designed to result in cost savings and benefit the environment. For every $1.00 spent on these programs, customers typically save nearly double that amount over time on the cost of providing electricity, and program participants will save even more. Learn more about these programs and rebates that may be available to you at www.epelectric.com.

Renewable Portfolio Standard Recovery

This Rider is established to recover Renewable Portfolio Standard (RPS) compliance costs.

Additional Information Used For Billing

Bill Determinants	
Pulse kWh	3,490,959

Send Correspondence To:
CUSTOMER SERVICE
P. O. Box 982
El Paso, TX 79960 - 0982
TX - (915) 543-5970
NM- (575) 526-5555
www.epelectric.com

Account Number	
Billing Date	**05/16/2024**
Amount Due 06/24/2024	**$ 117,392.07**

OFFICE AD CONT OFF 49 CES CENPE

Account Summary		
Previous Balance	$	125,456.46
Payments		(125,456.46)
Balance Forward		0.00
Current Billing Charges		117,392.07
Account Balance	**$**	**117,392.07**

Service Address: [redacted]

New Mexico - Military Research and Development - Holloman AFB 04/16/2024 - 05/15/202

Customer Charge -	2 Meters	@	$220.00		440.00
Energy Charge - Transmission - Off Peak	4,267,100 kWh	@	$0.0014	5,973.94	
Total Energy Charges					5,973.94
Demand Charge - Transmission	8,113 kW	@	$8.17		66,283.21
Federal Tax Credit					(511.13)
Fuel & Purchased Power Cost Adjustment - Trans 115KV	3,823,723 kWh	@	$-0.00669		(25,580.71)
Renewable Portfolio Standard Recovery	3,823,723 kWh	@	$0.008752		33,465.22
Energy Charge - Solar PV	447,316 kWh	@	$0.08338		37,297.21
Transportation Electrification Plan Recovery	3,823,723 kWh	@	$0.000095		363.25
Facility Lease Payment					(338.92)
				$	117,392.07

090/001 827449/4285799 0020143 1 I=0000000000

Keep This Portion For Your Records
Return This Portion With Your Payment

Amount Due 06/24/2024: $ 117,392.07

Billing Date 05/16/2024
Account Number [redacted]

Bright Hearts donation enclosed	
Amount enclosed	

[redacted]

000020143 I=000000

OFFICE AD CONT OFF 49 CES CENPE
[redacted]

El Paso Electric
P. O. Box 650801
Dallas, TX 75265-0801

[redacted]

Your Rights as a Customer

El Paso Electric (EPE) is dedicated to providing quality, reliable service to you, our valued customer. This booklet is presented as a summary of your rights as a customer and other useful information regarding your service with EPE. Please visit the EPE website at www.epelectric.com to access the "Your Rights as a Customer" booklet.

Energy Efficiency Programs

Energy Efficiency programs are designed to result in cost savings and benefit the environment. For every $1.00 spent on these programs, customers typically save nearly double that amount over time on the cost of providing electricity, and program participants will save even more. Learn more about these programs and rebates that may be available to you at www.epelectric.com.

Renewable Portfolio Standard Recovery

This Rider is established to recover Renewable Portfolio Standard (RPS) compliance costs.

Additional Information Used For Billing

Bill Determinants	
Pulse kWh	3,823,723

Send Correspondence To:
CUSTOMER SERVICE
P. O. Box 982
El Paso, TX 79960 - 0982
TX - (915) 543-5970
NM- (575) 526-5555
www.epelectric.com

Account Number	
Billing Date	**06/26/2024**
Amount Due 07/24/2024	**$ 269,087.94**

OFFICE AD CONT OFF 49 CES CENPE

Account Summary		
Previous Balance	$	117,392.07
Payments		(117,392.07)
Balance Forward		0.00
Current Billing Charges		269,087.94
Account Balance	**$**	**269,087.94**

Service Address: [redacted]

New Mexico - Military Research and Development - Holloman AFB 05/16/2024 - 06/17/202

Customer Charge -	2 Meters	@	$220.00		440.00
Energy Charge - Transmission - On Peak	356,254 kWh	@	$0.1198	42,679.23	
Energy Charge - Transmission - Off Peak	5,253,310 kWh	@	$0.0014	7,354.63	
Total Energy Charges					50,033.86
Demand Charge - Transmission	9,973 kW	@	$13.45		134,136.85
Federal Tax Credit					(1,298.00)
Fuel & Purchased Power Cost Adjustment - Trans 115KV	5,145,517 kWh	@	$0.000303		1,559.09
Renewable Portfolio Standard Recovery	5,145,517 kWh	@	$0.008752		45,033.56
Energy Charge - Solar PV	468,130 kWh	@	$0.08338		39,032.68
Transportation Electrification Plan Recovery	5,145,517 kWh	@	$0.000095		488.82
Facility Lease Payment					(338.92)
				$	269,087.94

090/001 837477/4296110 0000525 1 I=0000000000

Keep This Portion For Your Records
Return This Portion With Your Payment

Amount Due 07/24/2024: $ 269,087.94

Billing Date 06/26/2024
Account Number [redacted]

Bright Hearts donation enclosed	
Amount enclosed	

[redacted]

000000525 I=000000

OFFICE AD CONT OFF 49 CES CENPE
[redacted]

El Paso Electric
P. O. Box 650801
Dallas, TX 75265-0801

[redacted]

Your Rights as a Customer

El Paso Electric (EPE) is dedicated to providing quality, reliable service to you, our valued customer. This booklet is presented as a summary of your rights as a customer and other useful information regarding your service with EPE. Please visit the EPE website at www.epelectric.com to access the "Your Rights as a Customer" booklet.

Energy Efficiency Programs

Energy Efficiency programs are designed to result in cost savings and benefit the environment. For every $1.00 spent on these programs, customers typically save nearly double that amount over time on the cost of providing electricity, and program participants will save even more. Learn more about these programs and rebates that may be available to you at www.epelectric.com.

Renewable Portfolio Standard Recovery

This Rider is established to recover Renewable Portfolio Standard (RPS) compliance costs.

Additional Information Used For Billing

Bill Determinants	
Pulse kWh	5,145,517

Send Correspondence To:
CUSTOMER SERVICE
P. O. Box 982
El Paso, TX 79960 - 0982
TX - (915) 543-5970
NM- (575) 526-5555
www.epelectric.com

Account Number		
Billing Date		**07/24/2024**
Previous Balance	**$**	**269,087.94**
Amount Due 08/24/2024	**$**	**386,945.54**
Total Amount Due	**$**	**656,033.48**

OFFICE AD CONT OFF 49 CES CENPE

Account Summary

Previous Balance	$	269,087.94
Payments		0.00
Balance Forward		269,087.94
Current Billing Charges		386,945.54
Account Balance	**$**	**656,033.48**

Service Address: [redacted]

New Mexico - Military Research and Development - Holloman AFB 06/18/2024 - 07/18/202

Customer Charge -	2 Meters	@	$220.00		440.00
Energy Charge - Transmission - On Peak	838,817 kWh	@	$0.1198	100,490.28	
Energy Charge - Transmission - Off Peak	5,156,733 kWh	@	$0.0014	7,219.43	
Total Energy Charges					107,709.71
Demand Charge - Transmission	10,889 kW	@	$13.45		146,457.05
Federal Tax Credit					(1,790.14)
Fuel & Purchased Power Cost Adjustment - Trans 115KV	5,717,821 kWh	@	$0.010569		60,431.65
Renewable Portfolio Standard Recovery	5,717,821 kWh	@	$0.008752		50,042.37
Energy Charge - Solar PV	281,250 kWh	@	$0.08338		23,450.63
Transportation Electrification Plan Recovery	5,717,821 kWh	@	$0.000095		543.19
Facility Lease Payment					(338.92)
				$	386,945.54

090/001 844565/4303269 0020636 1 I=0000000000

Keep This Portion For Your Records
Return This Portion With Your Payment

Previous Balance	$	269,087.94	Billing Date	07/24/2024
Amount Due 08/24/2024:	$	386,945.54	Account Number	[redacted]
Total Amount Due:	$	656,033.48		

Bright Hearts donation enclosed	
Amount enclosed	

[redacted]

000020636 I=000000

OFFICE AD CONT OFF 49 CES CENPE
[redacted]

El Paso Electric
P. O. Box 650801
Dallas, TX 75265-0801

[redacted]

Your Rights as a Customer

El Paso Electric (EPE) is dedicated to providing quality, reliable service to you, our valued customer. This booklet is presented as a summary of your rights as a customer and other useful information regarding your service with EPE. Please visit the EPE website at www.epelectric.com to access the "Your Rights as a Customer" booklet.

Energy Efficiency Programs

Energy Efficiency programs are designed to result in cost savings and benefit the environment. For every $1.00 spent on these programs, customers typically save nearly double that amount over time on the cost of providing electricity, and program participants will save even more. Learn more about these programs and rebates that may be available to you at www.epelectric.com.

Renewable Portfolio Standard Recovery

This Rider is established to recover Renewable Portfolio Standard (RPS) compliance costs.

Additional Information Used For Billing

Bill Determinants	
Pulse kWh	5,717,821

Send Correspondence To:
CUSTOMER SERVICE
P. O. Box 982
El Paso, TX 79960 - 0982
TX - (915) 543-5970
NM- (575) 526-5555
www.epelectric.com

Account Number	
Billing Date	**08/19/2024**
Amount Due 09/24/2024	**$ 379,848.82**

OFFICE AD CONT OFF 49 CES CENPE

Account Summary

Previous Balance	$	656,033.48
Payments		(656,324.99)
Balance Forward		(291.51)
Current Billing Charges		380,140.33
Account Balance	**$**	**379,848.82**

Service Address: [redacted]

New Mexico - Military Research and Development - Holloman AFB 07/19/2024 - 08/16/202

Customer Charge -	2 Meters	@	$220.00		440.00
Energy Charge - Transmission - On Peak	762,123 kWh	@	$0.1198	91,302.34	
Energy Charge - Transmission - Off Peak	4,941,514 kWh	@	$0.0014	6,918.12	
Total Energy Charges					98,220.46
Demand Charge - Transmission	10,459 kW	@	$13.45		140,673.55
Federal Tax Credit					(1,682.76)
Fuel & Purchased Power Cost Adjustment - Trans 115KV	5,509,343 kWh	@	$0.014075		77,544.00
Renewable Portfolio Standard Recovery	5,509,343 kWh	@	$0.008752		48,217.77
Energy Charge - Solar PV	198,403 kWh	@	$0.08338		16,542.84
Transportation Electrification Plan Recovery	5,509,343 kWh	@	$0.000095		523.39
Facility Lease Payment					(338.92)
				$	380,140.33

090/001 85 1026/4309769 0020424 1 I=0000000000

Keep This Portion For Your Records
Return This Portion With Your Payment

Amount Due 09/24/2024: $ 379,848.82

Billing Date 08/19/2024
Account Number [redacted]

Bright Hearts donation enclosed	
Amount enclosed	

[redacted]

000020424 I=000000

OFFICE AD CONT OFF 49 CES CENPE
[redacted]

El Paso Electric
P. O. Box 650801
Dallas, TX 75265-0801

[redacted]

Your Rights as a Customer

El Paso Electric (EPE) is dedicated to providing quality, reliable service to you, our valued customer. This booklet is presented as a summary of your rights as a customer and other useful information regarding your service with EPE. Please visit the EPE website at www.epelectric.com to access the "Your Rights as a Customer" booklet.

Energy Efficiency Programs

Energy Efficiency programs are designed to result in cost savings and benefit the environment. For every $1.00 spent on these programs, customers typically save nearly double that amount over time on the cost of providing electricity, and program participants will save even more. Learn more about these programs and rebates that may be available to you at www.epelectric.com.

Renewable Portfolio Standard Recovery

This Rider is established to recover Renewable Portfolio Standard (RPS) compliance costs.

Additional Information Used For Billing

Bill Determinants	
Pulse kWh	5,509,343

Send Correspondence To:
CUSTOMER SERVICE
P. O. Box 982
El Paso, TX 79960 - 0982
TX - (915) 543-5970
NM- (575) 526-5555
www.epelectric.com

Account Number	
Billing Date	**09/19/2024**
Amount Due 10/24/2024	**$ 368,724.09**

OFFICE AD CONT OFF 49 CES CENPE

Account Summary		
Previous Balance	$	379,848.82
Payments		(380,140.33)
Balance Forward		(291.51)
Current Billing Charges		369,015.60
Account Balance	**$**	**368,724.09**

Service Address: [redacted]

New Mexico - Military Research and Development - Holloman AFB 08/17/2024 - 09/17/202

Customer Charge -	2 Meters	@	$220.00		440.00
Energy Charge - Transmission - On Peak	761,880 kWh	@	$0.1198	91,273.22	
Energy Charge - Transmission - Off Peak	5,183,319 kWh	@	$0.0014	7,256.65	
Total Energy Charges					98,529.87
Demand Charge - Transmission	10,801 kW	@	$13.45		145,273.45
Fuel & Purchased Power Cost Adjustment - Trans 115KV	5,549,077 kWh	@	$0.00768		42,616.91
Renewable Portfolio Standard Recovery	5,549,077 kWh	@	$0.008752		48,565.52
Energy Charge - Solar PV	400,595 kWh	@	$0.08338		33,401.61
Transportation Electrification Plan Recovery	5,549,077 kWh	@	$0.000095		527.16
Facility Lease Payment					(338.92)
				$	369,015.60

090/001 858330/4317293 0020251 1 I=0000000000

Keep This Portion For Your Records
Return This Portion With Your Payment

Amount Due 10/24/2024: $ 368,724.09

Billing Date 09/19/2024
Account Number [redacted]

Bright Hearts donation enclosed	
Amount enclosed	

[redacted]

000020251 I=000000

OFFICE AD CONT OFF 49 CES CENPE
[redacted]

El Paso Electric
P. O. Box 650801
Dallas, TX 75265-0801

[redacted]

Your Rights as a Customer

El Paso Electric (EPE) is dedicated to providing quality, reliable service to you, our valued customer. This booklet is presented as a summary of your rights as a customer and other useful information regarding your service with EPE. Please visit the EPE website at www.epelectric.com to access the "Your Rights as a Customer" booklet.

Energy Efficiency Programs

Energy Efficiency programs are designed to result in cost savings and benefit the environment. For every $1.00 spent on these programs, customers typically save nearly double that amount over time on the cost of providing electricity, and program participants will save even more. Learn more about these programs and rebates that may be available to you at www.epelectric.com.

Renewable Portfolio Standard Recovery

This Rider is established to recover Renewable Portfolio Standard (RPS) compliance costs.

Additional Information Used For Billing

Bill Determinants	
Pulse kWh	5,549,077

Send Correspondence To:
CUSTOMER SERVICE
P. O. Box 982
El Paso, TX 79960 - 0982
TX - (915) 543-5970
NM- (575) 526-5555
www.epelectric.com

Account Number	
Billing Date	**10/18/2024**
Amount Due 11/24/2024	**$ 199,597.28**

OFFICE AD CONT OFF 49 CES CENPE

Account Summary		
Previous Balance	$	368,724.09
Payments		(368,724.09)
Balance Forward		0.00
Current Billing Charges		199,597.28
Account Balance	**$**	**199,597.28**

Service Address: [redacted]

New Mexico - Military Research and Development - Holloman AFB 09/18/2024 - 10/17/202

Customer Charge -	2 Meters	@	$220.00		440.00
Energy Charge - Transmission - On Peak	339,775 kWh	@	$0.1198	40,705.05	
Energy Charge - Transmission - Off Peak	4,850,194 kWh	@	$0.0014	6,790.27	
Total Energy Charges					47,495.32
Demand Charge - Transmission	9,522 kW	@	$8.17		77,794.74
Fuel & Purchased Power Cost Adjustment - Trans 115KV	4,996,426 kWh	@	$0.002699		13,485.35
Renewable Portfolio Standard Recovery	4,996,426 kWh	@	$0.008752		43,728.72
Energy Charge - Solar PV	198,098 kWh	@	$0.08338		16,517.41
Transportation Electrification Plan Recovery	4,996,426 kWh	@	$0.000095		474.66
Facility Lease Payment					(338.92)
				$	199,597.28

090/001 865021/4324182 0020468 1 I=0000000000

Keep This Portion For Your Records
Return This Portion With Your Payment

Amount Due 11/24/2024: $ 199,597.28

Billing Date 10/18/2024
Account Number [redacted]

Bright Hearts donation enclosed	
Amount enclosed	

[redacted]

000020468 I=000000

OFFICE AD CONT OFF 49 CES CENPE
[redacted]

El Paso Electric
P. O. Box 650801
Dallas, TX 75265-0801

[redacted]

Your Rights as a Customer

El Paso Electric (EPE) is dedicated to providing quality, reliable service to you, our valued customer. This booklet is presented as a summary of your rights as a customer and other useful information regarding your service with EPE. Please visit the EPE website at www.epelectric.com to access the "Your Rights as a Customer" booklet.

Energy Efficiency Programs

Energy Efficiency programs are designed to result in cost savings and benefit the environment. For every $1.00 spent on these programs, customers typically save nearly double that amount over time on the cost of providing electricity, and program participants will save even more. Learn more about these programs and rebates that may be available to you at www.epelectric.com.

Renewable Portfolio Standard Recovery

This Rider is established to recover Renewable Portfolio Standard (RPS) compliance costs.

Additional Information Used For Billing

Bill Determinants	
Pulse kWh	4,996,426

Send Correspondence To:
CUSTOMER SERVICE
P. O. Box 982
El Paso, TX 79960 - 0982
TX - (915) 543-5970
NM- (575) 526-5555
www.epelectric.com

Account Number	
Billing Date	**11/18/2024**
Amount Due 12/24/2024	**$ 124,119.46**

OFFICE AD CONT OFF 49 CES CENPE

Account Summary		
Previous Balance	$	199,597.28
Payments		(199,597.28)
Balance Forward		0.00
Current Billing Charges		124,119.46
Account Balance	**$**	**124,119.46**

Service Address: [redacted]

New Mexico - Military Research and Development - Holloman AFB 10/18/2024 - 11/15/202

Customer Charge -	2 Meters	@	$220.00		440.00
Energy Charge - Transmission - Off Peak	4,271,498 kWh	@	$0.0014	5,980.10	
Total Energy Charges					5,980.10
Demand Charge - Transmission	8,791 kW	@	$8.17		71,822.47
Fuel & Purchased Power Cost Adjustment - Trans 115KV	4,148,425 kWh	@	$-0.000265		(1,099.33)
Renewable Portfolio Standard Recovery	4,148,425 kWh	@	$0.008752		36,307.02
Energy Charge - Solar PV	127,297 kWh	@	$0.08338		10,614.02
Transportation Electrification Plan Recovery	4,148,425 kWh	@	$0.000095		394.10
Facility Lease Payment					(338.92)
				$	124,119.46

090/001 871165/4330673 0020257 1 I=0000000000

Keep This Portion For Your Records
Return This Portion With Your Payment

Amount Due 12/24/2024: $ 124,119.46

Billing Date 11/18/2024
Account Number [redacted]

Bright Hearts donation enclosed	
Amount enclosed	

[redacted]

000020257 I=000000

OFFICE AD CONT OFF 49 CES CENPE
[redacted]

El Paso Electric
P. O. Box 650801
Dallas, TX 75265-0801

[redacted]

Your Rights as a Customer

El Paso Electric (EPE) is dedicated to providing quality, reliable service to you, our valued customer. This booklet is presented as a summary of your rights as a customer and other useful information regarding your service with EPE. Please visit the EPE website at www.epelectric.com to access the "Your Rights as a Customer" booklet.

Energy Efficiency Programs

Energy Efficiency programs are designed to result in cost savings and benefit the environment. For every $1.00 spent on these programs, customers typically save nearly double that amount over time on the cost of providing electricity, and program participants will save even more. Learn more about these programs and rebates that may be available to you at www.epelectric.com.

Renewable Portfolio Standard Recovery

This Rider is established to recover Renewable Portfolio Standard (RPS) compliance costs.

Additional Information Used For Billing

Bill Determinants	
Pulse kWh	4,148,425

Send Correspondence To:
CUSTOMER SERVICE
P. O. Box 982
El Paso, TX 79960 - 0982
TX - (915) 543-5970
NM- (575) 526-5555
www.epelectric.com

Account Number		
Billing Date		**12/17/2024**
Previous Balance	**$**	**124,119.46**
Amount Due 01/24/2025	**$**	**107,886.14**
Total Amount Due	**$**	**232,005.60**

OFFICE AD CONT OFF 49 CES CENPE

Account Summary		
Previous Balance	$	124,119.46
Payments		0.00
Balance Forward		124,119.46
Adjustments		3,472.90
Current Billing Charges		104,413.24
Account Balance	**$**	**232,005.60**

Service Address: [redacted]

Attention: Our check payment mailing address will change in 2025. Details to come.

New Mexico - Military Research and Development - Holloman AFB 11/16/2024 - 12/16/202

Customer Charge -	2 Meters	@	$220.00		440.00
Energy Charge - Transmission - Off Peak	4,311,798 kWh	@	$0.0014	6,036.52	
Total Energy Charges					6,036.52
Demand Charge - Transmission	7,581 kW	@	$8.17		61,936.77
Fuel & Purchased Power Cost Adjustment - Trans 115KV	4,206,233 kWh	@	$-0.002399		(10,090.75)
Renewable Portfolio Standard Recovery	4,206,233 kWh	@	$0.008752		36,812.95
Energy Charge - Solar PV	110,543 kWh	@	$0.08338		9,217.08
Transportation Electrification Plan Recovery	4,206,233 kWh	@	$0.000095		399.59
Facility Lease Payment					(338.92)
				$	104,413.24

Adjustments

01/03/2025	New Mexico Federal Tax Credit Reversal	$	3472.90

090/001 877037/4336617 0020008 1 I=0000000000

Keep This Portion For Your Records
Return This Portion With Your Payment

Previous Balance	$	124,119.46	Billing Date	12/17/2024
Amount Due 01/24/2025:	$	107,886.14	Account Number	[redacted]
Total Amount Due:	$	232,005.60		

Bright Hearts donation enclosed	
Amount enclosed	

[redacted]

000020008 I=000000

OFFICE AD CONT OFF 49 CES CENPE
[redacted]

El Paso Electric
P. O. Box 650801
Dallas, TX 75265-0801

[redacted]

Your Rights as a Customer

El Paso Electric (EPE) is dedicated to providing quality, reliable service to you, our valued customer. This booklet is presented as a summary of your rights as a customer and other useful information regarding your service with EPE. Please visit the EPE website at www.epelectric.com to access the "Your Rights as a Customer" booklet.

Energy Efficiency Programs

Energy Efficiency programs are designed to result in cost savings and benefit the environment. For every $1.00 spent on these programs, customers typically save nearly double that amount over time on the cost of providing electricity, and program participants will save even more. Learn more about these programs and rebates that may be available to you at www.epelectric.com.

Renewable Portfolio Standard Recovery

This Rider is established to recover Renewable Portfolio Standard (RPS) compliance costs.

Additional Information Used For Billing

Bill Determinants	
Pulse kWh	4,206,233

ATTACHMENT 8

Monthly Solar Energy Purchase Documentation –
Buena Vista Energy Center, LLC II (BV I)

Buena Vista I - Purchased Power Agreement

Source: Buena Vista I - Solar Statements

New Mexico Jurisdictional Portion

2024	RECs Purchased kWh	Delivered Energy [1] kWh	Total $	NM Supply Allocators	NM RECs kWh	NM Delivered Energy kWh	Total $ for NM
January	21,315,460.2	21,315,460.2	$ 516,686.75	0.2124311619	4,528,068	4,528,068	$ 109,760.37
February	22,372,355.0	22,372,355.0	$ 542,305.89	0.1963808856	4,393,503	4,393,503	$ 106,498.51
March	29,174,817.8	29,174,817.8	$ 707,197.58	0.1903769234	5,554,212	5,554,212	$ 134,634.10
April	28,888,022.7	28,888,022.7	$ 700,245.67	0.1802812271	5,207,968	5,207,968	$ 126,241.15
May	37,628,937.0	37,628,937.0	$ 912,125.43	0.1658218175	6,239,699	6,239,699	$ 151,250.30
June	29,318,773.8	29,318,773.8	$ 710,687.08	0.1768909664	5,186,226	5,186,226	$ 125,714.12
July	30,820,381.4	30,820,381.4	$ 747,086.05	0.1839280597	5,668,733	5,668,733	$ 137,410.09
August	31,505,224.6	31,505,224.6	$ 770,932.85	0.1883694985	5,934,623	5,934,623	$ 145,220.23
September	29,741,714.3	29,741,714.3	$ 727,779.74	0.1889628058	5,620,078	5,620,078	$ 137,523.30
October [2]	27,198,929.7	27,198,929.7	$ 665,557.81	0.1816387725	4,940,380	4,940,380	$ 120,891.10
November	19,821,846.3	19,821,846.3	$ 485,040.58	0.1785018984	3,538,237	3,538,237	$ 86,580.66
December	19,703,826.1	19,703,826.1	$ 482,152.62	0.1913004077	3,769,350	3,769,350	$ 92,235.99
Total	327,490,288.9	327,490,288.9	$ 7,967,798.05	n/a	60,581,078	60,581,078	$ 1,473,959.93

[1] Delivered energy equals gross production net of station power.

[2] The October 2024 invoice reflects the new rate of $24.47, effective from July 11, with adjustments for July 11-31, August through September. The adjustments have been included with the corresponding month in the table above.

New Mexico Reallocation

2024	RECs Purchased kWh	Delivered Energy [3] kWh	Total $	NM Supply Allocators [3]	NM RECs kWh	NM Delivered Energy kWh	Total $ for NM
January	0.0	0.0	$ -	1.0000000000	0	0	$ -
February	6,764,113.1	6,764,113.1	$ 163,962.12	1.0000000000	6,764,113	6,764,113	$ 163,962.12
March	6,764,113.1	6,764,113.1	$ 163,962.10	1.0000000000	6,764,113	6,764,113	$ 163,962.10
April	6,764,113.1	6,764,113.1	$ 163,962.10	1.0000000000	6,764,113	6,764,113	$ 163,962.10
May	6,764,113.1	6,764,113.1	$ 163,962.10	1.0000000000	6,764,113	6,764,113	$ 163,962.10
June	6,764,113.1	6,764,113.1	$ 163,962.10	1.0000000000	6,764,113	6,764,113	$ 163,962.10
July	6,764,113.1	6,764,113.1	$ 163,962.10	1.0000000000	6,764,113	6,764,113	$ 163,962.10
August	6,764,113.1	6,764,113.1	$ 163,962.10	1.0000000000	6,764,113	6,764,113	$ 163,962.10
September	6,764,113.1	6,764,113.1	$ 163,962.10	1.0000000000	6,764,113	6,764,113	$ 163,962.10
October	6,764,113.1	6,764,113.1	$ 163,962.10	1.0000000000	6,764,113	6,764,113	$ 163,962.10
November	6,764,113.1	6,764,113.1	$ 165,517.85	1.0000000000	6,764,113	6,764,113	$ 165,517.85
December	6,764,113.1	6,764,113.1	$ 169,768.25	1.0000000000	6,764,113	6,764,113	$ 169,768.25
Total	74,405,244.0	74,405,244.0	$ 1,810,945.02	n/a	74,405,244	74,405,244	$ 1,810,945.02

[3] Represents the reallocation from the Texas jurisdictional portion of Buena Vista I to New Mexico; therefore, utilizing a New Mexico allocator of 1.0.

Buena Vista Energy Center, LLC

[redacted]

BILL TO

El Paso Electric Company
Attn: Settlements Admin
Location 132
100 N. Stanton Street
El Paso, TX 79901-1442

SETTLEMENT DETAILS

Number:	2792
Date:	02-06-2024
Due Date:	03-06-2024
Grand Total:	$789,686.75 USD

Energy

Start Dt	End Dt	Description	Volume	UoM	Price	Price Type	Amount Due
01/01/2024	01/31/2024	PPA Energy - Excess Energy	0.00000	MWh	$12.12	FIXED	$0.00 USD
01/01/2024	01/31/2024	PPA Energy Generation	21,315.46016	MWh	$24.24	FIXED	$516,686.75 USD
Subtotal							**$516,686.75 USD**

Other

Start Dt	End Dt	Description	Volume	UoM	Price	Price Type	Amount Due
01/01/2024	01/31/2024	PPA Capacity	0.00000	MWh		FIXED	$273,000.00 USD
Subtotal							**$273,000.00 USD**

Current Balance:	$789,686.75 USD
Statement Grand Total:	$789,686.75 USD

Buena Vista Energy Center, LLC

[redacted]

ACH PAYMENT INSTRUCTIONS

[redacted]

WIRE PAYMENT INSTRUCTIONS

[redacted]

FOR QUESTIONS CONTACT

Analyst: Svetlana Vorobieva
Email: NEER-Revenue-Team.SharedMailbox@nexteraenergy.com

MONTHLY STATEMENT OF RECS

Renewable Energy delivery for the Month of __January , 20_24__

Energy Delivered: __21,315,460.16_____ kWh

Weighted Value of Energy Delivered ____N/A_____ kWh (multiply by RPS multiplier, if any)

SUPPLIER CERTIFICATION

I, __Daniel Dorsano_, hereby certify that:

The energy produced, sold and delivered by _Buena Vista Energy Center____ to El Paso Electric Company from these facilities is from a renewable energy resources, as defined by the 17.9.572 New Mexico Admin. Code;

Each megawatt hour of electricity is generated using a solar fuel source; and

No other Renewable Energy Certificates associated with the renewable energy produced and delivered by __Buena Vista Energy Center_ to El Paso Electric Company have been traded, sold, retired or otherwise transferred by _Buena Vista Energy Center_ to any other person or entity.

Buena Vista Energy Center

By: Daniel M. Dorsano

Daniel Dorsano, Business Manager

__02/06/2024_____ Date

Buena Vista Energy Center, LLC

[redacted]

BILL TO

El Paso Electric Company
Attn: Settlements Admin
Location 132
100 N. Stanton Street
El Paso, TX 79901-1442

SETTLEMENT DETAILS

Number:	3091
Date:	03-06-2024
Due Date:	04-03-2024
Grand Total:	$815,305.89 USD

Energy

Start Dt	End Dt	Description	Volume	UoM	Price	Price Type	Amount Due
02/01/2024	02/29/2024	PPA Energy - Excess Energy	0.00000	MWh	$12.12	FIXED	$0.00 USD
02/01/2024	02/29/2024	PPA Energy Generation	22,372.35502	MWh	$24.24	FIXED	$542,305.89 USD
Subtotal							**$542,305.89 USD**

Other

Start Dt	End Dt	Description	Volume	UoM	Price	Price Type	Amount Due
02/01/2024	02/29/2024	PPA Capacity	0.00000	MWh		FIXED	$273,000.00 USD
Subtotal							**$273,000.00 USD**

Current Balance:	$815,305.89 USD
Statement Grand Total:	$815,305.89 USD

Buena Vista Energy Center, LLC

[redacted]

ACH PAYMENT INSTRUCTIONS

[redacted]

WIRE PAYMENT INSTRUCTIONS

[redacted]

FOR QUESTIONS CONTACT

Analyst: Svetlana Vorobieva
Email: NEER-Revenue-Team.SharedMailbox@nexteraenergy.com

MONTHLY STATEMENT OF RECS

Renewable Energy delivery for the Month of __February , 20_24__

Energy Delivered: __22,372,355.02_____ kWh

Weighted Value of Energy Delivered ____N/A_____ kWh (multiply by RPS multiplier, if any)

SUPPLIER CERTIFICATION

I, __Daniel Dorsano_, hereby certify that:

The energy produced, sold and delivered by _Buena Vista Energy Center____ to El Paso Electric Company from these facilities is from a renewable energy resources, as defined by the 17.9.572 New Mexico Admin. Code;

Each megawatt hour of electricity is generated using a solar fuel source; and

No other Renewable Energy Certificates associated with the renewable energy produced and delivered by __Buena Vista Energy Center_ to El Paso Electric Company have been traded, sold, retired or otherwise transferred by _Buena Vista Energy Center_ to any other person or entity.

Buena Vista Energy Center

By: Daniel M. Dorsano

Daniel Dorsano, Business Manager

__03/06/2024_____ Date

Buena Vista Energy Center, LLC

[redacted]

BILL TO

El Paso Electric Company
Attn: Settlements Admin
Location 132
100 N. Stanton Street
El Paso, TX 79901-1442

SETTLEMENT DETAILS

Number:	3319
Date:	04-03-2024
Due Date:	05-01-2024
Grand Total:	$980,197.58 USD

Energy

Start Dt	End Dt	Description	Volume	UoM	Price	Price Type	Amount Due
03/01/2024	03/31/2024	PPA Energy - Excess Energy	0.00000	MWh	$12.12	FIXED	$0.00 USD
03/01/2024	03/31/2024	PPA Energy Generation	29,174.81784	MWh	$24.24	FIXED	$707,197.58 USD
Subtotal							**$707,197.58 USD**

Other

Start Dt	End Dt	Description	Volume	UoM	Price	Price Type	Amount Due
03/01/2024	03/31/2024	PPA Capacity	0.00000	MWh		FIXED	$273,000.00 USD
Subtotal							**$273,000.00 USD**

Current Balance:	$980,197.58 USD
Statement Grand Total:	$980,197.58 USD

Buena Vista Energy Center, LLC

[redacted]

ACH PAYMENT INSTRUCTIONS

[redacted]

WIRE PAYMENT INSTRUCTIONS

[redacted]

FOR QUESTIONS CONTACT

Analyst: Svetlana Vorobieva
Email: NEER-Revenue-Team.SharedMailbox@nexteraenergy.com

MONTHLY STATEMENT OF RECS

Renewable Energy delivery for the Month of __March , 20_24_

Energy Delivered: __29,174,817.84_____ kWh

Weighted Value of Energy Delivered ____N/A_____ kWh (multiply by RPS multiplier, if any)

SUPPLIER CERTIFICATION

I, __Daniel Dorsano_, hereby certify that:

The energy produced, sold and delivered by _Buena Vista Energy Center____ to El Paso Electric Company from these facilities is from a renewable energy resources, as defined by the 17.9.572 New Mexico Admin. Code;

Each megawatt hour of electricity is generated using a solar fuel source; and

No other Renewable Energy Certificates associated with the renewable energy produced and delivered by __Buena Vista Energy Center_ to El Paso Electric Company have been traded, sold, retired or otherwise transferred by _Buena Vista Energy Center_ to any other person or entity.

Buena Vista Energy Center

By: Daniel M. Dorsano

Daniel Dorsano, Business Manager

__04/03/2024_____ Date

Buena Vista Energy Center, LLC

[redacted]

BILL TO

El Paso Electric Company
Attn: Settlements Admin
Location 132
100 N. Stanton Street
El Paso, TX 79901-1442

SETTLEMENT DETAILS

Number:	3596
Date:	05-06-2024
Due Date:	06-04-2024
Grand Total:	$973,245.67 USD

Energy

Start Dt	End Dt	Description	Volume	UoM	Price	Price Type	Amount Due
04/01/2024	04/30/2024	PPA Energy - Excess Energy	0.00000	MWh	$12.12	FIXED	$0.00 USD
04/01/2024	04/30/2024	PPA Energy Generation	28,888.02273	MWh	$24.24	FIXED	$700,245.67 USD
Subtotal							**$700,245.67 USD**

Other

Start Dt	End Dt	Description	Volume	UoM	Price	Price Type	Amount Due
04/01/2024	04/30/2024	PPA Capacity	0.00000	MWh		FIXED	$273,000.00 USD
Subtotal							**$273,000.00 USD**

Current Balance:	$973,245.67 USD
Statement Grand Total:	$973,245.67 USD

Buena Vista Energy Center, LLC

[redacted]

ACH PAYMENT INSTRUCTIONS

[redacted]

WIRE PAYMENT INSTRUCTIONS

[redacted]

FOR QUESTIONS CONTACT

Analyst: Svetlana Vorobieva
Email: NEER-Revenue-Team.SharedMailbox@nexteraenergy.com

MONTHLY STATEMENT OF RECS

Renewable Energy delivery for the Month of __April, 20_24_

Energy Delivered: __28,888,022.73_____ kWh

Weighted Value of Energy Delivered ____N/A_____ kWh (multiply by RPS multiplier, if any)

SUPPLIER CERTIFICATION

I, __Daniel Dorsano_, hereby certify that:

The energy produced, sold and delivered by _Buena Vista Energy Center____ to El Paso Electric Company from these facilities is from a renewable energy resources, as defined by the 17.9.572 New Mexico Admin. Code;

Each megawatt hour of electricity is generated using a solar fuel source; and

No other Renewable Energy Certificates associated with the renewable energy produced and delivered by __Buena Vista Energy Center_ to El Paso Electric Company have been traded, sold, retired or otherwise transferred by _Buena Vista Energy Center_ to any other person or entity.

Buena Vista Energy Center

By: Daniel M. Dorsano

Daniel Dorsano, Business Manager

__05/06/2024_____ Date

Buena Vista Energy Center, LLC

[redacted]

BILL TO

El Paso Electric Company
Attn: Settlements Admin
Location 132
100 N. Stanton Street
El Paso, TX 79901-1442

SETTLEMENT DETAILS

Number:	3891
Date:	06-05-2024
Due Date:	07-05-2024
Grand Total:	$1,185,125.43 USD

Energy

Start Dt	End Dt	Description	Volume	UoM	Price	Price Type	Amount Due
05/01/2024	05/31/2024	PPA Energy - Excess Energy	0.00000	MWh	$12.12	FIXED	$0.00 USD
05/01/2024	05/31/2024	PPA Energy Generation	37,628.93695	MWh	$24.24	FIXED	$912,125.43 USD
Subtotal							**$912,125.43 USD**

Other

Start Dt	End Dt	Description	Volume	UoM	Price	Price Type	Amount Due
05/01/2024	05/31/2024	PPA Capacity	0.00000	MWh		FIXED	$273,000.00 USD
Subtotal							**$273,000.00 USD**

Current Balance:	$1,185,125.43 USD
Statement Grand Total:	$1,185,125.43 USD

Buena Vista Energy Center, LLC

[redacted]

ACH PAYMENT INSTRUCTIONS

[redacted]

WIRE PAYMENT INSTRUCTIONS

[redacted]

FOR QUESTIONS CONTACT

Analyst: Svetlana Vorobieva
Email: NEER-Revenue-Team.SharedMailbox@nexteraenergy.com

MONTHLY STATEMENT OF RECS

Renewable Energy delivery for the Month of __May, 20_24_

Energy Delivered: __37,628,936.95_____ kWh

Weighted Value of Energy Delivered ____N/A_____ kWh (multiply by RPS multiplier, if any)

SUPPLIER CERTIFICATION

I, __Daniel Dorsano_, hereby certify that:

The energy produced, sold and delivered by _Buena Vista Energy Center____ to El Paso Electric Company from these facilities is from a renewable energy resources, as defined by the 17.9.572 New Mexico Admin. Code;

Each megawatt hour of electricity is generated using a solar fuel source; and

No other Renewable Energy Certificates associated with the renewable energy produced and delivered by __Buena Vista Energy Center_ to El Paso Electric Company have been traded, sold, retired or otherwise transferred by _Buena Vista Energy Center_ to any other person or entity.

Buena Vista Energy Center

By: Daniel M. Dorsano

Daniel Dorsano, Business Manager

__06/05/2024_____ Date

Buena Vista Energy Center, LLC

[redacted]

BILL TO

El Paso Electric Company
Attn: Settlements Admin
Location 132
100 N. Stanton Street
El Paso, TX 79901-1442

SETTLEMENT DETAILS

Statement Number:	4238
PO Number:	
Date:	07-05-2024
Due Date:	08-02-2024
Grand Total:	$983,687.08 USD

Energy

Start Dt	End Dt	Description	Volume	UoM	Price	Price Type	Amount Due
06/01/2024	06/30/2024	PPA Energy - Excess Energy	0.00000	MWh	$12.12	FIXED	$0.00 USD
06/01/2024	06/30/2024	PPA Energy Generation	29,318.77381	MWh	$24.24	FIXED	$710,687.08 USD
Subtotal							**$710,687.08 USD**

Other

Start Dt	End Dt	Description	Volume	UoM	Price	Price Type	Amount Due
06/01/2024	06/30/2024	PPA Capacity	0.00000	MWh		FIXED	$273,000.00 USD
Subtotal							**$273,000.00 USD**

Current Balance:	$983,687.08 USD
Statement Grand Total:	$983,687.08 USD

Buena Vista Energy Center, LLC

[redacted]

ACH PAYMENT INSTRUCTIONS

[redacted]

WIRE PAYMENT INSTRUCTIONS

[redacted]

FOR QUESTIONS CONTACT

Analyst: Svetlana Vorobieva
Email: NEER-Revenue-Team.SharedMailbox@nexteraenergy.com

MONTHLY STATEMENT OF RECS

Renewable Energy delivery for the Month of _June 20_24_

Energy Delivered: __29,318,773.81_____ kWh

Weighted Value of Energy Delivered ____N/A_____ kWh (multiply by RPS multiplier, if any)

SUPPLIER CERTIFICATION

I, __Daniel Dorsano_, hereby certify that:

The energy produced, sold and delivered by _Buena Vista Energy Center____ to El Paso Electric Company from these facilities is from a renewable energy resources, as defined by the 17.9.572 New Mexico Admin. Code;

Each megawatt hour of electricity is generated using a solar fuel source; and

No other Renewable Energy Certificates associated with the renewable energy produced and delivered by __Buena Vista Energy Center_ to El Paso Electric Company have been traded, sold, retired or otherwise transferred by _Buena Vista Energy Center_ to any other person or entity.

Buena Vista Energy Center

By: Daniel M. Dorsano

Daniel Dorsano, Business Manager

__07/05/2024_____ Date

Buena Vista Energy Center, LLC

[redacted]

BILL TO

El Paso Electric Company
Attn: Settlements Admin
Location 132
100 N. Stanton Street
El Paso, TX 79901-1442

SETTLEMENT DETAILS

Statement Number:	4566
PO Number:	
Date:	08-05-2024
Due Date:	09-03-2024
Grand Total:	$1,020,086.05 USD

Energy

Start Dt	End Dt	Description	Volume	UoM	Price	Price Type	Amount Due
07/01/2024	07/31/2024	PPA Energy - Excess Energy	0.00000	MWh	$12.12	FIXED	$0.00 USD
07/01/2024	07/31/2024	PPA Energy Generation	30,820.38141	MWh	$24.24	FIXED	$747,086.05 USD
Subtotal							**$747,086.05 USD**

Other

Start Dt	End Dt	Description	Volume	UoM	Price	Price Type	Amount Due
07/01/2024	07/31/2024	PPA Capacity	0.00000	MWh		FIXED	$273,000.00 USD
Subtotal							**$273,000.00 USD**

Current Balance:	$1,020,086.05 USD
Statement Grand Total:	$1,020,086.05 USD

Buena Vista Energy Center, LLC

[redacted]

ACH PAYMENT INSTRUCTIONS

[redacted]

WIRE PAYMENT INSTRUCTIONS

[redacted]

FOR QUESTIONS CONTACT

Analyst: Svetlana Vorobieva
Email: NEER-Revenue-Team.SharedMailbox@nexteraenergy.com

MONTHLY STATEMENT OF RECS

Renewable Energy delivery for the Month of _July 20_24_

Energy Delivered: __30,820,381.41_____ kWh

Weighted Value of Energy Delivered ____N/A_____ kWh (multiply by RPS multiplier, if any)

SUPPLIER CERTIFICATION

I, __Daniel Dorsano_, hereby certify that:

The energy produced, sold and delivered by _Buena Vista Energy Center____ to El Paso Electric Company from these facilities is from a renewable energy resources, as defined by the 17.9.572 New Mexico Admin. Code;

Each megawatt hour of electricity is generated using a solar fuel source; and

No other Renewable Energy Certificates associated with the renewable energy produced and delivered by __Buena Vista Energy Center_ to El Paso Electric Company have been traded, sold, retired or otherwise transferred by _Buena Vista Energy Center_ to any other person or entity.

Buena Vista Energy Center

By: Daniel M. Dorsano

Daniel Dorsano, Business Manager
__08/05/2024_____ Date

Buena Vista Energy Center, LLC

[redacted]

BILL TO

El Paso Electric Company
Attn: Settlements Admin
Location 132
100 N. Stanton Street
El Paso, TX 79901-1442

SETTLEMENT DETAILS

Statement Number:	4880
PO Number:	
Date:	09-05-2024
Due Date:	10-03-2024
Grand Total:	$1,036,686.65 USD

Energy

Start Dt	End Dt	Description	Volume	UoM	Price	Price Type	Amount Due
08/01/2024	08/31/2024	PPA Energy - Excess Energy	0.00000	MWh	$12.12	FIXED	$0.00 USD
08/01/2024	08/31/2024	PPA Energy Generation	31,505.22464	MWh	$24.24	FIXED	$763,686.65 USD
Subtotal							**$763,686.65 USD**

Other

Start Dt	End Dt	Description	Volume	UoM	Price	Price Type	Amount Due
08/01/2024	08/31/2024	PPA Capacity	0.00000	MWh		FIXED	$273,000.00 USD
Subtotal							**$273,000.00 USD**

Current Balance:	$1,036,686.65 USD
Statement Grand Total:	$1,036,686.65 USD

Buena Vista Energy Center, LLC

[redacted]

ACH PAYMENT INSTRUCTIONS

[redacted]

WIRE PAYMENT INSTRUCTIONS

[redacted]

FOR QUESTIONS CONTACT

Analyst: Svetlana Vorobieva
Email: NEER-Revenue-Team.SharedMailbox@nexteraenergy.com

MONTHLY STATEMENT OF RECS

Renewable Energy delivery for the Month of _August 20_24_

Energy Delivered: __31,505,224.64_____ kWh

Weighted Value of Energy Delivered ____N/A_____ kWh (multiply by RPS multiplier, if any)

SUPPLIER CERTIFICATION

I, __Daniel Dorsano_, hereby certify that:

The energy produced, sold and delivered by _Buena Vista Energy Center____ to El Paso Electric Company from these facilities is from a renewable energy resources, as defined by the 17.9.572 New Mexico Admin. Code;

Each megawatt hour of electricity is generated using a solar fuel source; and

No other Renewable Energy Certificates associated with the renewable energy produced and delivered by __Buena Vista Energy Center_ to El Paso Electric Company have been traded, sold, retired or otherwise transferred by _Buena Vista Energy Center_ to any other person or entity.

Buena Vista Energy Center

By: Daniel M. Dorsano

Daniel Dorsano, Business Manager
__09/05/2024_____ Date

Buena Vista Energy Center, LLC

[redacted]

BILL TO

El Paso Electric Company
Attn: Settlements Admin
Location 132
100 N. Stanton Street
El Paso, TX 79901-1442

SETTLEMENT DETAILS

Statement Number:	5259
PO Number:	
Date:	10-03-2024
Due Date:	11-01-2024
Grand Total:	$993,939.15 USD

Energy

Start Dt	End Dt	Description	Volume	UoM	Price	Price Type	Amount Due
09/01/2024	09/30/2024	PPA Energy - Excess Energy	0.00000	MWh	$12.12	FIXED	$0.00 USD
09/01/2024	09/30/2024	PPA Energy Generation	29,741.71428	MWh	$24.24	FIXED	$720,939.15 USD
Subtotal							**$720,939.15 USD**

Other

Start Dt	End Dt	Description	Volume	UoM	Price	Price Type	Amount Due
09/01/2024	09/30/2024	PPA Capacity	0.00000	MWh		FIXED	$273,000.00 USD
Subtotal							**$273,000.00 USD**

Current Balance:	$993,939.15 USD
Statement Grand Total:	$993,939.15 USD

Buena Vista Energy Center, LLC

[redacted]

ACH PAYMENT INSTRUCTIONS

[redacted]

WIRE PAYMENT INSTRUCTIONS

[redacted]

FOR QUESTIONS CONTACT

Analyst: Svetlana Vorobieva
Email: NEER-Revenue-Team.SharedMailbox@nexteraenergy.com

MONTHLY STATEMENT OF RECS

Renewable Energy delivery for the Month of _September 20_24_

Energy Delivered: __29,741,714.28_____ kWh

Weighted Value of Energy Delivered ____N/A_____ kWh (multiply by RPS multiplier, if any)

SUPPLIER CERTIFICATION

I, __Daniel Dorsano_, hereby certify that:

The energy produced, sold and delivered by _Buena Vista Energy Center____ to El Paso Electric Company from these facilities is from a renewable energy resources, as defined by the 17.9.572 New Mexico Admin. Code;

Each megawatt hour of electricity is generated using a solar fuel source; and

No other Renewable Energy Certificates associated with the renewable energy produced and delivered by __Buena Vista Energy Center_ to El Paso Electric Company have been traded, sold, retired or otherwise transferred by _Buena Vista Energy Center_ to any other person or entity.

Buena Vista Energy Center

By: Daniel M. Dorsano

Daniel Dorsano, Business Manager
__10/03/2024_____ Date

Buena Vista Energy Center, LLC

[redacted]

BILL TO

El Paso Electric Company
Attn: Settlements Admin
Location 132
100 N. Stanton Street
El Paso, TX 79901-1442

SETTLEMENT DETAILS

Statement Number:	5587
PO Number:	
Date:	11-05-2024
Due Date:	12-05-2024
Grand Total:	$957,833.95 USD

Energy

Start Dt	End Dt	Description	Volume	UoM	Price	Price Type	Amount Due
07/11/2024	07/31/2024	PPA Energy Generation	0.00000	MWh			$5,189.35 USD
08/01/2024	08/31/2024	PPA Energy Generation	0.00000	MWh			$7,246.20 USD
09/01/2024	09/30/2024	PPA Energy Generation	0.00000	MWh			$6,840.59 USD
10/01/2024	10/31/2024	PPA Energy - Excess Energy	0.00000	MWh	$12.24	FIXED	$0.00 USD
10/01/2024	10/31/2024	PPA Energy Generation	27,198.92967	MWh	$24.47	FIXED	$665,557.81 USD
Subtotal							**$684,833.95 USD**

Curtailment

Start Dt	End Dt	Description	Volume	UoM	Price	Price Type	Amount Due
10/01/2024	10/31/2024	PPA Curtailment Contract Price	0.00000	MWh	$24.47	FIXED	$0.00 USD
Subtotal							**$0.00 USD**

Other

Start Dt	End Dt	Description	Volume	UoM	Price	Price Type	Amount Due
10/01/2024	10/31/2024	PPA Capacity	0.00000	MWh		FIXED	$273,000.00 USD
Subtotal							**$273,000.00 USD**

Current Balance:	$957,833.95 USD
Statement Grand Total:	$957,833.95 USD

Buena Vista Energy Center, LLC

[redacted]

ACH PAYMENT INSTRUCTIONS

[redacted]

WIRE PAYMENT INSTRUCTIONS

[redacted]

FOR QUESTIONS CONTACT

Analyst: Svetlana Vorobieva
Email: NEER-Revenue-Team.SharedMailbox@nexteraenergy.com

MONTHLY STATEMENT OF RECS

Renewable Energy delivery for the Month of _October 20_24_

Energy Delivered: __27,198,929.67_____ kWh

Weighted Value of Energy Delivered ____N/A_____ kWh (multiply by RPS multiplier, if any)

SUPPLIER CERTIFICATION

I, __Daniel Dorsano_, hereby certify that:

The energy produced, sold and delivered by _Buena Vista Energy Center____ to El Paso Electric Company from these facilities is from a renewable energy resources, as defined by the 17.9.572 New Mexico Admin. Code;

Each megawatt hour of electricity is generated using a solar fuel source; and

No other Renewable Energy Certificates associated with the renewable energy produced and delivered by __Buena Vista Energy Center_ to El Paso Electric Company have been traded, sold, retired or otherwise transferred by _Buena Vista Energy Center_ to any other person or entity.

Buena Vista Energy Center

By: Daniel M. Dorsano

Daniel Dorsano, Business Manager
__11/05/2024_____ Date

Buena Vista Energy Center, LLC

[redacted]

BILL TO

El Paso Electric Company
Attn: Settlements Admin
Location 132
100 N. Stanton Street
El Paso, TX 79901-1442

SETTLEMENT DETAILS

Statement Number:	5882
PO Number:	
Date:	12-05-2024
Due Date:	01-06-2025
Grand Total:	$758,040.58 USD

Energy

Start Dt	End Dt	Description	Volume	UoM	Price	Price Type	Amount Due
11/01/2024	11/30/2024	PPA Energy - Excess Energy	0.00000	MWh	$12.24	FIXED	$0.00 USD
11/01/2024	11/30/2024	PPA Energy Generation	19,821.84626	MWh	$24.47	FIXED	$485,040.58 USD
Subtotal							**$485,040.58 USD**

Other

Start Dt	End Dt	Description	Volume	UoM	Price	Price Type	Amount Due
11/01/2024	11/30/2024	PPA Capacity	0.00000	MWh		FIXED	$273,000.00 USD
Subtotal							**$273,000.00 USD**

Current Balance:	$758,040.58 USD
Statement Grand Total:	$758,040.58 USD

Buena Vista Energy Center, LLC

[redacted]

ACH PAYMENT INSTRUCTIONS

[redacted]

WIRE PAYMENT INSTRUCTIONS

[redacted]

FOR QUESTIONS CONTACT

Analyst: Svetlana Vorobieva
Email: NEER-Revenue-Team.SharedMailbox@nexteraenergy.com

MONTHLY STATEMENT OF RECS

Renewable Energy delivery for the Month of _November 20_24_

Energy Delivered: __19,821,846.26_____ kWh

Weighted Value of Energy Delivered ____N/A_____ kWh (multiply by RPS multiplier, if any)

SUPPLIER CERTIFICATION

I, __Daniel Dorsano_, hereby certify that:

The energy produced, sold and delivered by _Buena Vista Energy Center____ to El Paso Electric Company from these facilities is from a renewable energy resources, as defined by the 17.9.572 New Mexico Admin. Code;

Each megawatt hour of electricity is generated using a solar fuel source; and

No other Renewable Energy Certificates associated with the renewable energy produced and delivered by __Buena Vista Energy Center_ to El Paso Electric Company have been traded, sold, retired or otherwise transferred by _Buena Vista Energy Center_ to any other person or entity.

Buena Vista Energy Center

By: Daniel M. Dorsano

Daniel Dorsano, Business Manager
__12/05/2024_____ Date

Buena Vista Energy Center, LLC

[redacted]

BILL TO

El Paso Electric Company
Attn: Settlements Admin
Location 132
100 N. Stanton Street
El Paso, TX 79901-1442

SETTLEMENT DETAILS

Statement Number:	6322
PO Number:	
Date:	01-06-2025
Due Date:	02-04-2025
Grand Total:	$755,152.62 USD

Energy

Start Dt	End Dt	Description	Volume	UoM	Price	Price Type	Amount Due
12/01/2024	12/31/2024	PPA Energy - Excess Energy	0.00000	MWh	$12.24	FIXED	$0.00 USD
12/01/2024	12/31/2024	PPA Energy Generation	19,703.82609	MWh	$24.47	FIXED	$482,152.62 USD
Subtotal							**$482,152.62 USD**

Other

Start Dt	End Dt	Description	Volume	UoM	Price	Price Type	Amount Due
12/01/2024	12/31/2024	PPA Capacity	0.00000	MWh		FIXED	$273,000.00 USD
Subtotal							**$273,000.00 USD**

Current Balance:	$755,152.62 USD
Statement Grand Total:	$755,152.62 USD

Buena Vista Energy Center, LLC

[redacted]

ACH PAYMENT INSTRUCTIONS

[redacted]

WIRE PAYMENT INSTRUCTIONS

[redacted]

FOR QUESTIONS CONTACT

Analyst: Svetlana Vorobieva
Email: NEER-Revenue-Team.SharedMailbox@nexteraenergy.com

MONTHLY STATEMENT OF RECS

Renewable Energy delivery for the Month of _December 20_24_

Energy Delivered: __19,703,826.09_____ kWh

Weighted Value of Energy Delivered ____N/A_____ kWh (multiply by RPS multiplier, if any)

SUPPLIER CERTIFICATION

I, __Daniel Dorsano_, hereby certify that:

The energy produced, sold and delivered by _Buena Vista Energy Center____ to El Paso Electric Company from these facilities is from a renewable energy resources, as defined by the 17.9.572 New Mexico Admin. Code;

Each megawatt hour of electricity is generated using a solar fuel source; and

No other Renewable Energy Certificates associated with the renewable energy produced and delivered by __Buena Vista Energy Center_ to El Paso Electric Company have been traded, sold, retired or otherwise transferred by _Buena Vista Energy Center_ to any other person or entity.

Buena Vista Energy Center

By: Daniel M. Dorsano

Daniel Dorsano, Business Manager
__01/06/2025_____ Date

ATTACHMENT 09

Monthly Solar Energy Purchase Documentation –
Buena Vista Energy Center, LLC II (BV II)

Buenva Vista II - Purchased Power Agreement
Source: Buena Vista II - Solar Statements

2024	RECs Purchased kWh	Delivered Energy [1] kWh		Total $
January	3,910,814.6	3,910,814.6	$	90,457.14
February	4,077,355.4	4,077,355.4	$	94,309.23
March	5,065,625.3	5,065,625.3	$	117,167.91
April	5,830,636.7	5,830,636.7	$	134,862.63
May	6,867,701.3	6,867,701.3	$	158,849.93
June	5,687,795.9	5,687,795.9	$	131,558.72
July	5,726,814.7	5,726,814.7	$	132,461.22
August	5,754,546.8	5,754,546.8	$	133,102.67
September	5,382,704.6	5,382,704.6	$	124,501.96
October	5,227,027.0	5,227,027.0	$	120,901.13
November	3,845,653.3	3,845,653.3	$	88,949.96
December	3,561,675.5	3,561,675.5	$	82,381.55
Total	60,938,351.0	60,938,351.0	$	1,409,504.05

[1] Delivered energy equals gross production net of station power.

ATTACHMENT 10

Summary of EPE's Distributed Generation Information

EPE's Distributed Generation
EPE Billing Data

2024	DG Purchased Power Rate 16 (ONLY) kWh		All DG Total $
January	582,746	$	41,509.54
February	840,343	$	60,539.62
March	1,758,733	$	183,610.29
April	2,738,417	$	266,595.05
May	3,691,817	$	341,574.55
June	1,537,983	$	230,365.24
July	581,241	$	78,798.59
August	538,747	$	15,060.78
September	600,842	$	17,651.17
October	852,299	$	4,878.08
November	1,362,400	$	36,440.87
December	953,298	$	21,894.67
Totals:	16,038,866	$	1,298,918.45

BEFORE THE NEW MEXICO PUBLIC REGULATION COMMISSION

APPLICATION FOR APPROVAL OF EL PASO ELECTRIC COMPANY'S RENEWABLE ENERGY ACT PLAN FOR 2026, AND NINTH REVISED RATE NO. 38 – RPS COST RIDER	)	**CASE NO. 25-00___-UT**
EL PASO ELECTRIC COMPANY, Applicant.	)	

DECLARATION OF JAMES SCHICHTL IN SUPPORT OF THE FOREGOING DIRECT TESTIMONY TO EL PASO ELECTRIC COMPANY'S APPLICATION FOR APPROVAL OF ITS RENEWABLE ENERGY ACT PLAN FOR 2026, AND NINTH REVISED RATE NO. 38 – RPS COST RIDER

I, ***James Schichtl***, pursuant to Rule 1-011 NMRA, state as follows:

1. I affirm in writing under penalty of perjury under the laws of the State of New Mexico that the following statements are true and correct.

2. I am over 18 years of age and have personal knowledge of the facts stated herein. I am employed by El Paso Electric Company ("EPE" or "the Company") as the *Vice President of Customer and Regulatory Solutions.*

3. The foregoing Direct Testimony of James Schichtl, together with all exhibits sponsored therein and attached thereto, is true and accurate based on my knowledge and belief.

4. I submit this Declaration, based upon my personal knowledge and upon information and belief, in support of EPE's ***Application for Approval of Its Renewable Energy Act Plan for 2026, and Ninth Revised Rate No. 38 – RPS Cost Rider***.

FURTHER, DECLARANT SAYETH NAUGHT.

I declare under penalty of perjury that the foregoing is true and correct.

Executed on May 1, 2025.

/s/ *James Schichtl*

JAMES SCHICHTL

BEFORE THE NEW MEXICO PUBLIC REGULATION COMMISSION

APPLICATION FOR APPROVAL OF	)	
EL PASO ELECTRIC COMPANY'S	)	
RENEWABLE ENERGY ACT PLAN FOR 2026,	)	
AND NINTH REVISED RATE NO. 38 – RPS	)	**CASE NO. 25-00___-UT**
COST RIDER	)	
	)	
EL PASO ELECTRIC COMPANY,	)	
Applicant.	)	
	)	

DIRECT TESTIMONY

OF

EMMANUEL VILLALOBOS

MAY 1, 2025

EL PASO ELECTRIC COMPANY
DIRECT TESTIMONY OF
EMMANUEL VILLALOBOS

TABLE OF CONTENTS

SUBJECT		PAGE
I.	INTRODUCTION AND QUALIFICATIONS	1
II.	PURPOSE OF TESTIMONY	4
III.	EPE'S 2026 PLAN	5
	A. PLAN OVERVIEW	5
	B. DETERMINATION OF RPS	6
	C. RENEWABLE ENERGY PORTFOLIO	9
IV.	NEW RENEWABLE RESOURCE	12
V.	ENERGY PROJECTIONS	40
VI.	2026 PLAN COSTS	44
VII.	DETERMINATION OF THE RCT	46
VIII.	OTHER RULE 572 REQUIREMENTS	48

EXHIBITS

Exhibit EV-1	EPE's Renewable Energy Act ("REA") Procurement Plan
Exhibit EV-2	EPE's New Mexico Renewable Portfolio Standard Requirement
Exhibit EV-3	Plan Year (2026) RECs and Costs
Exhibit EV-4	Solar Power Purchase Agreement between El Paso Electric Company and Santa Teresa Storage, LLC, Executed November 18, 2024 ("Santa Teresa PPA")
Exhibit EV-5	Energy Storage Agreement between El Paso Electric Company and Santa Teresa Storage, LLC, Executed November 18, 2024 ("Santa Teresa ESA")

EL PASO ELECTRIC COMPANY
DIRECT TESTIMONY OF
EMMANUEL VILLALOBOS

I. INTRODUCTION AND QUALIFICATIONS

Q1. PLEASE STATE YOUR NAME AND BUSINESS ADDRESS.

A. My name is Emmanuel Villalobos, and my business address is 100 N. Stanton Street, El Paso, Texas 79901.

Q2. HOW ARE YOU EMPLOYED?

A. I am employed by El Paso Electric Company ("EPE" or "Company") as the Director of the Market Development and Resource Strategy Department ("MDRS").

Q3. PLEASE SUMMARIZE YOUR EDUCATIONAL AND BUSINESS BACKGROUND.

A. I graduated from the University of Texas at El Paso with a Bachelor of Business Administration degree in Economics in 2008 and Master of Science in Economics with a concentration in Econometrics and Forecasting in 2010.

In 2009, I began working for EPE as a Real Time Energy Trader, where my duties included evaluating and balancing EPE's bulk electrical system through the hourly purchase and sale of energy in the wholesale market. In addition, my duties included the purchase of supplemental power to decrease generation costs for EPE customers while working closely with EPE's System Operations and Power Generation divisions to maintain a reliable, safe, and cost-effective BES.

In 2011, I was promoted to a Forward Marketer position where my duties included engaging in long-term wholesale power transactions, natural gas contract negotiations, and modeling for financial planning. Additional duties included procuring natural gas on a monthly and mid-term basis, assisting with nuclear fuel contracts, and estimating long-term natural gas requirements and future market prices, in order to maintain an economic and reliable fuel supply. I received progressive promotions in my capacity as a Forward Marketer from 2013 until 2019, when I accepted a position at Arevon Energy ("Arevon") as the Director of Origination.

Arevon is a renewable energy company that supplies clean energy to utilities and corporations in North America. As the Director of Origination, I was part of the group that developed origination and power marketing strategies and business plans to secure development of renewable projects, and that initiated contract relationships with various interested stakeholders.

In 2020, I accepted a position at EPE as a Resource Management Regulatory and Quality Assurance Specialist. This role was part of a new department at EPE that focused on developing improved process controls, driving organizational efficiencies, and assisting with trading practices. I then transitioned to a Business Development Lead for special projects in 2021. In that capacity, I focused on the development of business opportunity plans including the emerging western markets.

In 2022, I was promoted to the Director of Western Market Development. This newly created department focused on regional market exploration for utilities operating in the western United States. In 2023, the Resource Planning and Western Market Development Departments were merged to form the MDRS Department that I currently oversee.

Q4. PLEASE DESCRIBE YOUR CURRENT RESPONSIBILITIES WITH EPE.

A. As Director of EPE's MDRS Department, I am responsible for overseeing all aspects of resource planning, including oversight of the economic planning of generation resources and regional market development. My resource planning responsibilities and activities include obtaining an optimal resource portfolio mix of supply-side and demand-side resources to meet near and long-term forecasted annual peak and energy demand requirements in the near and long-term within the regional EPE operates. In this role, I collaborate with EPE's Economic Forecasting, Transmission, Operations, Regulatory, and Energy Efficiency departments, along with other internal departments and public stakeholders, to ensure both short- and long-term factors are integrated into EPE's New Mexico Integrated Resource Plan ("IRP"). Additionally, I oversee and assist with EPE's MDRS Request for Proposal ("RFP") processes, guiding the identification, selection, procurement, and implementation of new generation resources to meet customer demand and comply

with regulatory standards in the Texas and New Mexico jurisdictions.

Q5. HAVE YOU PRESENTED TESTIMONY BEFORE UTILITY REGULATORY BODIES?

A. Yes. I have presented testimony before the Public Utility Commission of Texas ("PUCT").

II. PURPOSE OF TESTIMONY

Q6. WHAT IS THE PURPOSE OF YOUR TESTIMONY?

A. The purpose of my testimony is to support EPE's Application for Approval of its Renewable Energy Act ("REA") Plan for Plan Year 2026 ("Plan", "2026 Plan" or "Plan for 2026"), including the new procurement proposal needed to satisfy Plan Year renewable portfolio standard ("RPS") obligations and to make reasonable and consistent progress toward future renewable portfolio standards and the zero-carbon standard.

My testimony supports EPE's Plan for 2026 and specifically addresses the following:

- EPE's determination of the Plan Year (2026) RPS and inflation adjusted renewable cost threshold ("RCT") for 2026;
- EPE's Commission-approved renewable energy portfolio;

- EPE's new resource selection;
- EPE's renewable energy and associated REC projections to meet 40 percent RPS in Plan Year (2026);
- EPE's Plan Year (2026) procurement amounts and costs; and
- Next Plan Year (2027) data for informational purpose.

My testimony also demonstrates that EPE's Plan is consistent with EPE's most recent IRP accepted by the New Mexico Public Regulation Commission ("NMPRC" or "Commission") in NMPRC Case No. 21-00242-UT and explains any material differences.

Q7. ARE YOU SPONSORING ANY EXHIBITS IN THIS FILING?

A. Yes. I am sponsoring the exhibits listed above in the Table of Contents.

III. EPE'S 2026 PLAN

A. PLAN OVERVIEW

Q8. PLEASE SUMMARIZE EPE'S PLAN FOR 2026.

A. The 2026 Plan provides information and data required by the REA and Rule 17.9.572 ("Rule 572") for Plan Year (2026) as well as the Next Plan Year (2027) for informational purposes.

The 2026 Plan first provides EPE's Plan Year (2026) and Next Plan Year

(2027) determination of the RPS. The Plan then describes EPE's approved renewable energy portfolio contributing to 40 percent RPS for the Plan Year (2026) and the proposed new renewable energy resource (solar with energy storage), which, as I stated in my Direct Testimony above, is needed to satisfy Plan Year RPS obligations and to make reasonable and consistent progress toward future renewable portfolio standards and the zero-carbon standard.

Next, the 2026 Plan provides EPE's renewable energy and REC projections to be applied toward the RPS for the Plan Year and Next Plan Year toward projected compliance with RPS obligations for both years. Finally, the 2026 Plan provides the Plan Year (2026) and Next Plan Year (2027) procurement costs, the RCT analysis for the new resource, and EPE's RPS Rider rates for 2026, sponsored by EPE witness Rene F. Gonzalez.

The 2026 Plan is attached to my Direct Testimony as Exhibit EV-1.

B. DETERMINATION OF RPS

Q9. WHAT IS THE RPS AND HOW IS IT CALCULATED?

A. The RPS is the minimum percentage of forecasted New Mexico jurisdictional energy sales to consumers that is required by the REA to be from renewable energy. The RPS for Plan Year (2026) and Next Plan Year (2027) is 40 percent.

The "RPS Calculation" is EPE's determination of the amount of renewable energy, based on the projected New Mexico jurisdictional kilowatt-hour ("kWh")

sales (expressed in renewable energy credits or RECs) that EPE projects it will need to meet the applicable RPS for the Plan Year (2026) and the Next Plan Year (2027) for informational purposes. The net jurisdictional kWh sales are the forecasted New Mexico jurisdictional energy sales adjusted for weather, projected energy efficiency, distributed generation ("DG") purchased under Rate No. 16, load management reductions, and projected energy sales for New Mexico State University ("NMSU") facility.

Q10. PLEASE EXPLAIN THE ADJUSTMENTS FOR PROJECTED ENERGY SALES FOR NMSU.

A. As a result of a strategic partnership with NMSU, there is a three (3) MW solar plus one (1) MW battery energy storage system ("BESS") project built and located on the NMSU campus in Las Cruces, New Mexico, which generates solar electricity that is consumed by the university. EPE does not own the RECs associated with the generation produced by the NMSU solar project pursuant to the Commission-approved Special Rate Contract between EPE and NMSU. Because EPE bills NMSU on their total load requirements, EPE subtracts the production from the NMSU solar facility from the EPE energy retail sales forecast to reduce the RECs that do not count toward RPS compliance.

Q11. HOW DOES EPE DEMONSTRATE COMPLIANCE WITH THE RPS?

A. Compliance with the RPS is demonstrated by registration/receiving and retirement of RECs associated with renewable energy from Commission-approved renewable energy resources with the regional tracking system known as Western Renewable Energy Generation Information System ("WREGIS") within four years of their creation. RECs are normally expressed in Megawatt-hour ("MWh") units where one MWh or REC is equal to 1,000 kWh.

Q12. DOES EPE HAVE ANY EXEMPTED CUSTOMERS UNDER SECTION 62-16-4(C) OF THE REA?

A. No.

Q13. DOES EPE HAVE A COMMISSION APPROVED VOLUNTARY RENEWABLE ENERGY PROGAM?

A. No.

Q14. HAS EPE CALCULATED THE RECS NEEDED TO MEET 40 PERCENT RPS IN THE PLAN YEAR (2026) AND NEXT PLAN YEAR (2027)?

A. Yes. Exhibit EV-2 shows EPE's RPS calculation for the Plan Year (2026) and Next Plan Year (2027) for informational purposes. In summary, as illustrated in Exhibit EV-2, to meet the 40 percent RPS in the Plan Year (2026) and Next Plan Year

(2027), EPE projects needing approximately 858,803 RECs and 1,007,274 RECs, respectively.

Q15. WHY IS THE PROJECTED REC REQUIREMENT SUBSTANTIALLY HIGHER IN 2027?

A. The projected REC requirement for 2027 is substantially higher due to an increase in EPE's forecasted New Mexico jurisdictional energy sales resulting from a new large commercial and industrial customer.

C. RENEWABLE ENERGY PORTFOLIO

Q16. PLEASE DESCRIBE EPE'S APPROVED RENEWABLE ENERGY PORTFOLIO THAT WILL CONTRIBUTE TO MEETING 40 PERCENT RPS FOR PLAN YEAR 2026.

A. EPE's Commission-approved renewable energy portfolio is described in Exhibit EV-1 to my Direct Testimony. In summary, EPE will continue to rely on its RPS procurements, which are renewable purchased power agreements ("PPAs") and Energy Storage Agreements ("ESAs") for renewable energy resources approved by the Commission in prior REA Plan filing cases for RPS compliance. EPE will also continue to rely on the portion of renewable energy and RECs assigned to New Mexico customers from a previously approved customer dedicated and

previously approved system renewable energy resources: Holloman Air Force Base ("HAFB"), Macho Springs, and BV1, respectively. Finally, consistent with NMPRC approvals, EPE relies on RECs associated with excess renewable energy generated by DG customers which are purchased under Rate No. 16.

Q17. DOES EPE OWN RENEWABLE GENERATING RESOURCES THAT ARE NOT UTILIZED FOR RPS COMPLIANCE IN NEW MEXICO?

A. Yes. In its New Mexico jurisdiction, EPE has the NMSU facility described above. The energy and RECs from this facility are not currently counted for New Mexico RPS purposes.

Q18. HAS EPE'S EXISTING RENEWABLE PORTFOLIO CHANGED SINCE EPE'S REA PLAN FILING FOR 2025 WAS APPROVED IN DOCKET NO. 24-00176-UT?

A. Yes. The Camino Real Landfill Gas to Energy Facility ("CRLEF") biogas qualifying facility ("QF") was sold in February 2025 to Nopetro. Since the sale in February 2025, the facility is no longer operational as a QF and REC generation has ceased; therefore, EPE is not able to rely on REC generation from this facility for meeting RPS compliance. EPE witness James Schichtl provides additional information on this sale. Additionally, the Carne Project commercial operation date ("COD") has

changed from August 2025 to February 27, 2026. Additional information regarding the Carne Project COD modification is provided in EPE witness Schichtl's Direct Testimony and in the 2024 year-end narrative in EPE's 2024 RPS report included as Exhibit JS-2 to that Direct Testimony.

Q19. ARE THESE CHANGES FACTORED INTO EPE'S PROJECTIONS IN THIS PLAN FILING?

A. Yes. EPE's energy projections provided in the next section of my testimony assume the revised COD of February 27, 2026, for the Carne Project and the removal of CRLEF.

Q20. ARE THERE ANY OTHER SIGNIFICANT CHANGES FROM EPE'S LAST PLAN FILING THAT IMPACT EPE'S ENERGY PROJECTIONS FOR PLAN YEAR 2026 AND THE NEXT PLAN YEAR?

A. Yes. In addition to changes already discussed regarding the removal of the Camino Real Landfill Gas to Energy Facility and the updated commercial operation date for the Carne Project, EPE's energy projections for Plan Year (2026) and the Next Plan Year (2027) reflect updates to EPE's New Mexico jurisdictional sales forecast.

Since the last REA Plan filing, EPE has revised its energy sales forecast to account for higher projected load growth within the New Mexico service territory.

The updated forecast incorporates higher baseline energy consumption from a new large commercial and industrial customer, resulting in an increase to the projected jurisdictional energy sales relative to the prior filing.

Q21. IS EPE PRESENTING A NEW RESOURCE FOR PLAN YEAR 2026?

A. Yes. As explained below, EPE selected and entered into agreements for a new system renewable energy resource (solar plus battery storage) called the Santa Teresa Project, expected to be in commercial operation by 2026. The details of the new resource are presented in the next section.

IV. NEW RENEWABLE RESOURCE

Q22. WHY DID EPE SOLICIT BIDS FOR A NEW RENEWABLE ENERGY RESOURCE FOR NEW MEXICO?

A. The purpose of the 2023 Renewable Energy RFP for New Mexico was to acquire approximately 150,000 MWh of guaranteed renewable energy and associated RECs by May 1, 2025 as a replacement for the planned Hecate facilities.

The full history of events leading to the default of the combined 150 MW solar generation Hecate facilities is detailed in monthly Hecate Status Reports filed by EPE in Dockets No. 19-00099-UT and 19-00348-UT from June 2023 following the Commission's approval of amendments to the Hecate PPAs through November

2024 when EPE filed Notice of Termination of the PPAs.

Shortly after EPE filed its August 2023 Monthly Hecate Status report stating that EPE did not expect Hecate to achieve commercial operation by June 1, 2024, EPE took the proactive step to develop an RFP for New Mexico to acquire renewable energy and RECs to make up for, at the time, the potential delay or loss of the Hecate project. EPE selected Merrimack Energy Group, Inc ("Merrimack"), in August 2023, during development of the RFP to serve as independent evaluator for the competitive procurement process.

EPE issued an all-source RFP for New Mexico on October 6, 2023, seeking the most cost-effective and reliable renewable electric resources or combination of resources available to make up for the anticipated loss of the Hecate facilities and meet EPE's anticipated near term RPS needs for 150,000 MWh of renewable energy beginning May 1, 2025.

EPE also issued an all-source RFP for its Texas jurisdiction in the fall of 2023. Due to significant and aggressive load growth in EPE's Texas jurisdiction at that time, the Texas RFP was seeking energy capacity as well as energy to make up for the anticipated loss of the Hecate facility.

Q23. WHY DID EPE ISSUE THE RFP BEFORE TERMINATING THE HECATE PROJECT?

A. The competitive procurement process from issuance of an RFP through COD can take up to five years, or longer with evolving supply chain delays. EPE made the proactive decision to move forward with issuing an RFP to make up for the anticipated loss of the Hecate Project prior to default and termination of the PPA to obtain a replacement resource as quickly as possible and minimize the anticipated impact to EPE's REA obligations. EPE witness Schichtl addresses the termination of the Hecate PPAs.

Q24. PLEASE DESCRIBE THE 2023 NEW MEXICO RFP.

A. In October 2023, EPE issued the 2023 New Mexico Renewable Energy RFP to competitively procure approximately 150,000 megawatt-hours of short-term and/or long-term cost-effective and reliable renewable electric resources, with deliveries beginning as early as May 1, 2025, but no later than May 1, 2027. The primary purpose of the RFP was to replace the anticipated shortfall resulting from the potential loss of the Hecate Project and to support compliance with New Mexico's RPS requirements.

Additional details regarding the RFP structure, evaluation process, and solicitation phases are provided in the expert report of EPE witness Oliver.

Q25. WAS THE 2023 NEW MEXICO RFP WIDELY DISTRIBUTED?

A. Yes. The 2023 New Mexico RFP was distributed via e-mail to an extensive list of previous RFP participants and any participants that requested to be included on the distribution list to elicit robust participation. EPE also issued a national press release and posted the 2023 New Mexico RFP to EPE's public website to increase awareness of its issuance. The Company also hosted an informational webinar session to further explain the details of the 2023 New Mexico RFP to potential bidders. Respondents were allotted approximately three months to submit proposals, which were due on January 5, 2024.

Q26. DID THE NM RFP INCLUDE OPPORTUNITIES FOR BIDDERS TO PROPOSE PURCHASED POWER, FACILITY SELF-BUILD, OR FACILITY BUILD-TRANSFER OPTIONS?

A. Yes.

Q27. DID EPE USE AN INDEPENDENT EVALUATOR TO REVIEW THE BIDS?

A. Yes. The third-party Independent Evaluator utilized in previous EPE RFPs, Merrimack, and its Principal, Wayne J. Oliver, was solicited to ensure the process was fair and transparent, identify and resolve issues as they arose, oversee the evaluation and selection process, review all modeling results and analysis, monitor and, if necessary, participate in the contract negotiation process.

Q28. PLEASE SUMMARIZE THE BID RESPONSES TO THE NEW MEXICO RFP.

A. EPE received a total of 59 proposals from 14 firms proposing several options with diverse technology types. The proposal distribution for the various technology types is shown in Table EV-1 below. Please refer to the Direct Testimony of EPE witness Oliver for additional details of the 2023 NM RFP proposal analysis.

Table EV-1. Proposal Distribution

Generation Resource Type	Quantity All Bids	Quantity Shortlisted Bids
Solar (Stand-alone)	13	4
Solar + BESS (Solar paired with storage)	41	9
BESS (Stand-alone)	1	0
Wind (Stand-alone)	3	1
Other	1	0
Total Bids	**59**	**14**
Non-conforming Bids	2	0
Withdrawn	4	0
Total Qualifying Bids	**53**	**14**

Q29. WERE ANY OF THE BIDDERS ELIMINATED AT THE OUTSET?

A. Yes. During the initial screening of submitted proposals, the MDRS department in consultation with Merrimack conducted a compliance review to determine whether each bid met the minimum RFP requirements. Proposals that were incomplete, inconsistent, or failed to meet mandatory criteria—such as responsiveness, technical viability and specifications, interconnection readiness, financial requirements, or formatting rules—were classified as nonconforming or nonresponsive.

These bids were eliminated from further evaluation before reaching the economic or technical scoring stages, ensuring we only moved forward with proposals that are viable, comparable, and aligned with the objectives of the 2023 New Mexico RFP. Two proposals were identified as non-conforming.

Q30. PLEASE DESCRIBE THE EVALUATION CRITERIA USED TO RANK THE PROPOSALS.

A. The evaluation criteria included both a qualitative and a quantitative review. The qualitative review consisted of reviewing the following: submittal of bid and filing fee payment on time, eligible resource technology, proposed project sizes, contract structure, submittal of all forms, operational requirements for resource type as defined by the 2023 New Mexico RFP, bidder experience, site control, interconnection plan, and bidder financial capability.

The quantitative review looked at the economic information of each proposal

option and calculated the Levelized Cost of Energy ("LCOE") which included estimated interconnection costs.

Q31. DID EPE USE THE NET PRESENT VALUE METHODOLOGY TO ANALYZE COSTS?

A. Yes. EPE used the LCOE method that utilizes the net present value of the resource cost and energy in the calculation of the LCOE. This was also used for the purposes of ranking and selecting a shortlist.

Q32. WHAT DOES THE TERM LEVELIZED COST MEAN AND HOW ARE LEVELIZED COSTS CALCULATED?

A. The LCOE is an effective cost metric to compare the cost competitiveness of same technology type energy generating resources. This term and calculation are commonly used in the energy industry. To calculate the LCOE, one must first take the net-present value of the total cost of energy over the term of the PPA (the results being in dollars). That number is then divided by the net present value of the energy (MWh) over the term of the PPA. The unit rate for LCOE is $/MWh.

Q33. ONCE THE LCOE WAS DETERMINED, HOW DID EPE RANK THE PROPOSALS?

A. EPE's LCOE cost calculations were reviewed and confirmed by Merrimack, and all proposed bids were initially reviewed and then ranked by the lowest LCOE for each resource type to determine the short-list.

Q34. HOW MANY PROPOSALS AND WHICH RESOURCE TYPES WERE SHORT-LISTED BASED ON THE LCOE ANALYSIS?

A. As reflected in Table EV-1 above, EPE short-listed 14 proposals consisting of 4 standalone solar PV proposals, 9 coupled solar PV and battery energy storage proposals, and one standalone wind proposal. EPE notified the short-listed bidders on January 26, 2024.

Q35. WHAT WAS THE NEXT STEP?

A. The short-listed proposals were then modeled in PLEXOS based on their respective operational characteristics, *e.g.*, energy profile, energy and/or capacity, commercial operation date, resource technology.

PLEXOS is EPE's capacity expansion software that selects the lowest-cost portfolio of resources from the modeled resources that can safely and reliably meet EPE's RPS and capacity needs. PLEXOS is a stochastic tool that runs thousands of Monte Carlo simulations over a multi-year time horizon to determine various portfolios of resources that can safely meet EPE's reliability metric. At the same

time, PLEXOS runs thousands of hourly dispatch iterations of multiple combinations of resources, keeping track of overall costs during the multi-year horizon, to ultimately select the lowest cost portfolio of resources.

Q36. WHAT DID EPE LEARN FROM THE PLEXOS ANALYSIS?

A. The initial PLEXOS results revealed that the top-ranking bids from the New Mexico RFP did not satisfy the 150,000 MWh RPS requirement in a cost-effective and reliable manner. While EPE's RFP clearly stated the goal of acquiring up to 150,000 MWh per year of RPS-eligible energy—roughly equivalent to a 50 MW solar facility—the actual market response was limited in that size range. Many bidders proposed significantly larger projects, or solar-plus-storage combinations that exceeded both the energy and capacity requested. In one instance where a project was appropriately sized, the pricing offered was not economically competitive.

As a result, when modeled in PLEXOS, none of the smaller, NM-only shortlisted bids provided an optimal resource solution. The modeling showed that a combined resource portfolio—including a competitively priced solar-plus-storage project from the Texas RFP—would more reliably meet New Mexico's RPS needs, offer a lower total cost, and better align with system reliability requirements. This portfolio ultimately led to the selection of the Santa Teresa Project.

Q37. WHAT HAPPENED NEXT?

A. The PLEXOS analysis demonstrated that a portfolio leveraging bids from both the New Mexico and Texas RFPs together provided superior outcomes — specifically, lower overall portfolio cost, better resource availability, and greater alignment with system needs. In response to these findings, and consistent with the recommendations of the Independent Evaluator, EPE determined that the optimal approach for both jurisdictions was to select a combined resource sourced from the 2023 New Mexico and Texas RFPs. This approach allowed EPE to capture economies of scale, minimize curtailment, and optimize delivery through existing transmission infrastructure. The Santa Teresa project emerged as the portfolio selection with the lowest net present value of cost while still meeting the energy needs in the New Mexico jurisdiction. As noted in EPE witness Oliver's Final Report, which is attached to his Direct Testimony as Exhibit WJO-4, this approach was effectively and creatively managed by EPE, and resulted in economic benefits for New Mexico customers relative to the available alternatives.

Q38. PLEASE DESCRIBE THE EVALUATION CRITERIA USED TO MAKE THAT DETERMINATION.

A. EPE evaluated proposals based on a combination of quantitative and qualitative factors. Quantitative criteria included the LCOE, total net present value of project

costs, and capacity contribution toward New Mexico load obligations. PLEXOS modeling was used to simulate system-wide operational performance, taking into account curtailment, round-trip efficiency losses, and resource dispatchability. Qualitative criteria included bidder experience, site control, interconnection readiness, and the ability to meet commercial operation deadlines. When comparing the results of the New Mexico-only portfolio against the combined New Mexico and Texas portfolio, the latter demonstrated lower cost to customers, higher ELCC, and fewer implementation risks. This holistic evaluation confirmed that the selected combined resource was the most prudent and beneficial choice.

Q39. WAS THE COMBINED NEW MEXICO AND TEXAS RESOURCE SELECTED FROM A COMPETITIVE PROCESS?

A. Yes. Both the New Mexico and Texas resources selected for the Santa Teresa project were the result of open, competitive solicitations — EPE's 2023 New Mexico RFP and 2023 Texas RFP. Each RFP was publicly issued, widely distributed, and subject to oversight by an Independent Evaluator, Merrimack Energy Group, to ensure transparency, fairness, and adherence to best practices. The selected Santa Teresa project was competitively bid and ranked as the most cost-effective solution based on both the LCOE evaluation and portfolio analysis conducted in PLEXOS. It was further validated by Merrimack's independent

assessment, which confirmed that the selection process was objective, that the Santa Teresa bid met all technical and commercial criteria, and that its inclusion in the combined portfolio offered superior value relative to alternative configurations.

Q40. DID THE TEXAS RFP INCLUDE OPPORTUNITIES FOR BUILDERS TO PROPOSE FACILITIES WITH DIVERSE OPERATIONAL CHARACTERISTICS?

A. Yes. The short-listed proposals were then modeled in PLEXOS based on their respective operational characteristics, e.g., energy profile, energy and/or capacity that the solar plus battery option had the lowest portfolio cost that provided sufficient energy and RECs to meet EPE's New Mexico RPS requirements and New Mexico customer capacity needs. Based on the amount of solar penetration that EPE currently has on its system, standalone solar resources have an effective load carrying capability[1] ("ELCC") of approximately 43 percent while battery storage resources have an ELCC of 100 percent. This means that battery storage resources are providing approximately 2.3 times the capacity that standalone solar can. When the battery is coupled with a solar resource, it reduces the amount of hourly solar curtailments while allowing EPE to use the solar generation during times where the energy is most needed, reducing total costs to customers.

[1] The effective load carrying capability (ELCC) depends on the saturation of various resources that make up the system and may vary by year.

With respect to other evaluation criteria, EPE selected the winning bidder that demonstrated that it is an experienced company with financial strength, has secured site control for the project, and is advanced in the interconnection process.

Q41. DID THE TEXAS RFP ALSO USE AN INDEPENDENT EVALUATOR TO EVALUATE THE TEXAS RFP PROPOSAL?

A. Yes. Merrimack served as Independent Evaluator for the both the 2023 Texas and New Mexico RFPs.

Q42. DID EPE USE THE NET PRESENT VALUE METHODOLOGY TO ANALYZE THE COST OF THE PROPOSED COMBINED RESOURCE?

A. Yes. EPE used the LCOE methodology that utilizes the net present value of the resource cost and energy in the calculation of the LCOE to analyze the Santa Teresa project.

Q43. PLEASE EXPLAIN WHAT THE LOWEST COST PORTFOLIO MEANS.

A. The lowest cost portfolio represents the selection of resources that will provide the lowest net present value of the portfolio cost through the end of the study horizon. The PLEXOS model identified the resource that will result in the lowest overall cost to customers under the parameters and inputs of the modeled scenario.

Q44. DID EPE THEN SELECT A PROJECT(S)?

A. Yes. After completion of EPE's final proposal review and project selection(s), EPE notified D. E. Shaw Renewable Investments ("DESRI"), on May 15, 2024, that its Santa Teresa project had been selected to commence contract negotiations. Thereafter, EPE and DESRI worked diligently through contract negotiations. The Santa Teresa power purchase agreement and energy storage agreements were executed on November 18, 2024. Copies of the Santa Teresa PPA and Santa Teresa ESA are provided as Exhibits EV-4 and EV-5 to my Direct Testimony, respectively.

Q45. PLEASE DESCRIBE THE SANTA TERESA PROJECT FACILITY.

A. The Santa Teresa project selected and awarded is a new 150 MW solar PV facility coupled with a 150 MW battery storage system to be built in Dona Ana County, approximately five miles southwest of Santa Teresa, New Mexico. The project is planned to be interconnected to the Verde substation 115 kV transmission line.

Q46. PLEASE DESCRIBE THE KEY TERMS AND CONDITIONS OF THE SANTA TERESA PROJECT.

A. The agreement is for a 20-year energy and capacity purchase to be delivered from the Santa Teresa project with an expected COD of June 30, 2026. The Santa Teresa

project has a fixed energy price of $28.95/MWh for the solar generation and an estimated rate of $12.95/kW-month for the battery storage capacity cost. The final fixed rate of the battery storage capacity will be based off the 90 Day average spot price of lithium carbonate on the Shanghai Metals Market at the time the lithium is delivered to the factory.

Based on historical lithium carbonate pricing over the last five years, pricing could range from approximately $1/kW-month lower to $0.50/kW-Month higher. In any event, if the lithium price increase exceeds about $1/kW-Month (depending on exchange rate), the ESA provides that EPE may re-negotiate or terminate the agreement. The Santa Teresa Project PPA and ESA that were executed on November 18, 2024, are attached as Exhibits EV-4 and EV-5, respectively.

The Santa Teresa project was bifurcated into two separate contracts (the PPA and the ESA) to better manage the separate components of the project. However, in order for the project to be viable, both agreements need to be contemporaneously approved.

Table EV-2 below summarizes the Santa Teresa project. EPE will receive the associated RECs with energy under a bundled price. The Santa Teresa project is expected to provide EPE 476,542 MWh of first full year energy.

Table EV-2. EPE 2023 New Mexico RFP Project Details[2]

Project	Technology	Capacity (MW)	Location	Term (Years)	COD	Rate	Escalation (Annual)	Expected Energy (MWh/yr)
Santa Teresa	Solar Photovoltaic + Battery Storage (AC-coupled)	150 MW+ 150 MW	Dona Ana County, New Mexico	20	June 30, 2026	$28.95/MWh (energy) $12.95/kW-mo. (capacity)	None	476,542

Q47. DID EPE NEGOTIATE ANY CUSTOMER PROTECTIONS TO MITIGATE PROJECT DELAYS?

A. In order to help ensure added protections for EPE customers to mitigate against project delays, EPE negotiated higher security of the project as well has higher liquidated damages between the expected COD and online COD than that of the recently approved Carne agreement. EPE negotiated daily delay damage rates ranging from $250 to $750/MW-Day for both the solar and battery, which are elevated from historical market rates for delay damages.

Q48. FOR PLAN YEAR 2026, WHAT PORTION OF THE PROJECT'S RENEWABLE ENERGY GENERATION IS EPE SEEKING TO ALLOCATE TO NEW MEXICO?

[2] The total project size for the Santa Teresa Project is 150 MW solar PV and 150 MW battery storage. For the Plan Year 2026, EPE is requesting approval of the full 150 MW solar and 50 MW of the 150 MW battery storage portion of the project in this Application.

A. For Plan Year 2026, EPE is seeking approval to allocate 100 percent of the renewable energy generated from the Santa Teresa Project, or 150 MW, which EPE projects is the amount of energy needed to meet the 40 percent RPS requirement for the Plan Year 2026.

Q49. HAS EPE IDENTIFIED ADDITIONAL CHANGES SINCE THE ISSUANCE OF THE 2023 NM RFP THAT SUPPORT EPE'S DECISION TO ALLOCATE ADDITIONAL GENERATION FROM THE SANTA TERESA PORJECT TO NEW MEXICO IN THE PLAN YEAR (2026)?

A. Since the issuance of the RFP, additional factors—including unanticipated delays in the commercial operation date of the Carne Project and updated forecasts reflecting higher load growth in EPE's New Mexico service territory—have further increased EPE's need for additional generation and capacity to serve customers in 2026 and beyond.

Q50. WHY IS EPE SEEKING TO ALLOCATE ALL SANTA TERESA ENERGY TO NEW MEXICO FOR PLAN YEAR 2026.

A. EPE is seeking to allocate additional energy from the Santa Teresa Project to New Mexico to ensure that sufficient renewable energy and RECs are available to meet the 40 percent RPS target for Plan Year 2026.

Given the updated load growth projections and the removal of certain legacy renewable resources and the delay in others, EPE determined that additional renewable energy allocation was necessary to maintain RPS compliance. Allocating additional Santa Teresa energy to New Mexico provides greater margin for compliance and reduces reliance on short-term REC market purchases, thereby promoting cost stability and reducing price risk for customers while supporting the state's broader renewable energy and carbon reduction objectives.

Q51. DOES EPE'S PROCUREMENT PROPSOSAL ALSO INCLUDE A PORTION OF THE SANTA TERESA ENERGY STORAGE?

A. Yes. EPE proposes to purchase and include 50 MW of the battery energy storage component of the Project in EPE's RPS Portfolio.

Q52. WILL INCLUDING A PORTION OF THE SANTA TERESA ENERGY STORAGE HELP EPE MEET ITS OBLIGATIONS UNDER THE REA?

A. Yes. Adding 50 MW of the battery energy storage component will help minimize solar generation curtailments to better meet the REA while allowing EPE to use the solar energy at a later time of day when it is most needed.

Q53. ARE THERE OTHER REASONS EPE HAS PROPOSED TO INCLUDE A

PORTION OF THE ENERGY STORAGE COMPONENT IN EPE'S RENEWABLE ENERGY PORTFOLIO?

A. Yes. EPE is seeking approval of a portion of the Santa Teresa Project's battery storage capacity to allocate to New Mexico in order to proactively and prudently address New Mexico's growing system needs. While EPE initially issued the 2023 Texas RFP to address significant load growth in its Texas service territory, the evaluation process revealed that load growth in New Mexico was also outpacing previous expectations. Given the evolving load forecast and the need for additional flexible capacity in New Mexico, it became clear that allocating a portion of the energy storage to New Mexico would be the most efficient and forward-thinking approach.

Rather than undertaking a new, duplicative RFP process—which would introduce unnecessary delay, expose EPE and its customers to increased market price risk, and drive additional administrative costs—EPE determined it would be more prudent to leverage the results of the existing competitive solicitation. Using the best available information at the time, EPE identified a reasonable and cost-effective solution that meets both New Mexico's renewable energy goals and system reliability requirements.

Approval of the portion of energy storage for New Mexico customers reflects a proactive planning decision that minimizes costs, expedites project deployment, and

ensures that renewable energy and associated capacity are available to reliably meet customer needs.

EPE witness Schichtl provides additional support for EPE's decision to allocate a portion of the Santa Teresa energy storage to New Mexico.

Q54. WHAT IS THE LEVELIZED COST AND FIRST FULL YEAR ANNUAL COST FOR THE PORTION OF THE SANTA TERESA PROJECT ALLOCATED TO NEW MEXICO FOR PLAN YEAR 2026?

A. The LCOE of the Santa Teresa project (combined solar and storage) is $45.67/MWh and is based on DESRI's revised energy and capacity pricing per its best and final offer ("BAFO"). The LCOE takes into consideration the degradation of the solar PV panels, which reduces the annual generation of the system every year of its useful life, and the degradation of the battery. The expected first full-year cost for the 150 MW solar and 50 MW battery storage portion that EPE is requesting in its proposal is estimated to be $21.435 million.

Q55. DOES THIS TAKE INTO ACCOUNT PROJECTED CURTAILMENTS OR TAKE INTO ACCOUNT ROUND-TRIP LOSSES TO BATTERY STORAGE OF THE PROJECT?

A. No. The LCOE analysis does not take into account projected solar curtailments or

roundtrip efficiency losses to the battery storge.

Q56. WHY DID EPE NOT INCLUDE PROJECTED CURTAILMENTS OR ROUND-TRIP EFFICIENCY LOSSES IN ITS LCOE ANALYSIS?

A. The PLEXOS model considers all solar curtailments and round-trip efficiency losses within the software. PLEXOS analyzes all generated solar energy on an hourly basis then optimizes the system for the day by deciding when the best hour to either (a) sink the energy to meet native load, (b) store the energy into the battery to use at a more optimal time, taking round-trip efficiency losses and hourly market pricing into consideration, or (c) curtail the energy due to system and/or market conditions. EPE would be undervaluing the project by double-counting the projected curtailments and round-trip efficiency losses in its LCOE analysis as well as the PLEXOS model.

Q57. HAS EPE EVALUATED THE COST OF THE PROPOSED PROCUREMENT COMPARED TO RECENT PRICES FOR COMPARABLE ENERGY RESOURCES ELSEWHERE IN THE SOUTHWESTERN UNITED STATES?

A. Yes. As explained above, the Santa Teresa project offered the lowest portfolio cost. In addition, to verify the reasonableness of the price for the new procurement, EPE conducted a comparative analysis including independent published sources, including Lazard LCOE Analysis Version 17.0 (US Solar-Utility Scale)[3] and Lazard's LCOS Analysis Version 9.0 (Energy Storage Systems).[4] The analysis showed that the cost of the new solar procurement (150 MW, $28.95/MWh) was at the lowest end of the Lazard LCOE price range between $29 to $92/MWh, as shown in Figure EV-1 below. In addition, the estimated capacity cost of the storage is 50 MW, $12.95/kW-Month or $155.40/kW-year. The Lazard's analysis does not specifically reflect a 50 MW, four-hour battery Utility-Scale solar project; however, the LCOE for 100 MW of the Santa Teresa project (four-hour battery) is $158.73. When compared to $214 to $374/kW-year for a 100 MW, four-hour battery analysis in the Lazard's LCOE Analysis for Energy Storage Systems, the Santa Teresa Project is still lower.

[3] Lazard's Levelized Cost of Energy Analysis–Version 17.0. https://www.lazard.com/media/gjyffoqd/lazards-lcoeplus-june-2024.pdf

Latest report published in June 2024.
[4] Lazard's Levelized Cost of Storage - Version 9.0; https://www.lazard.com/media/gjyffoqd/lazards-lcoeplus-june-2024.pdf

Figure EV-1 Lazard Solar PV LCOE

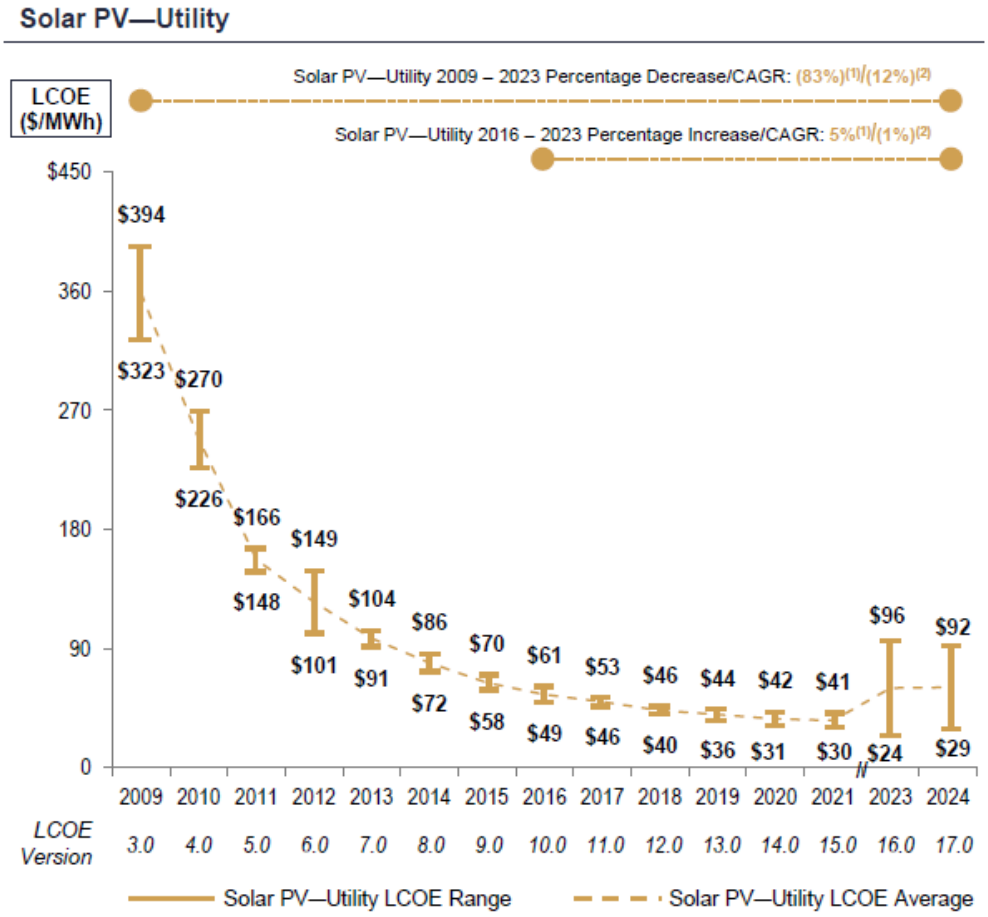

Figure EV-2 Lazard Levelized Cost of Storage ($/kW-year)

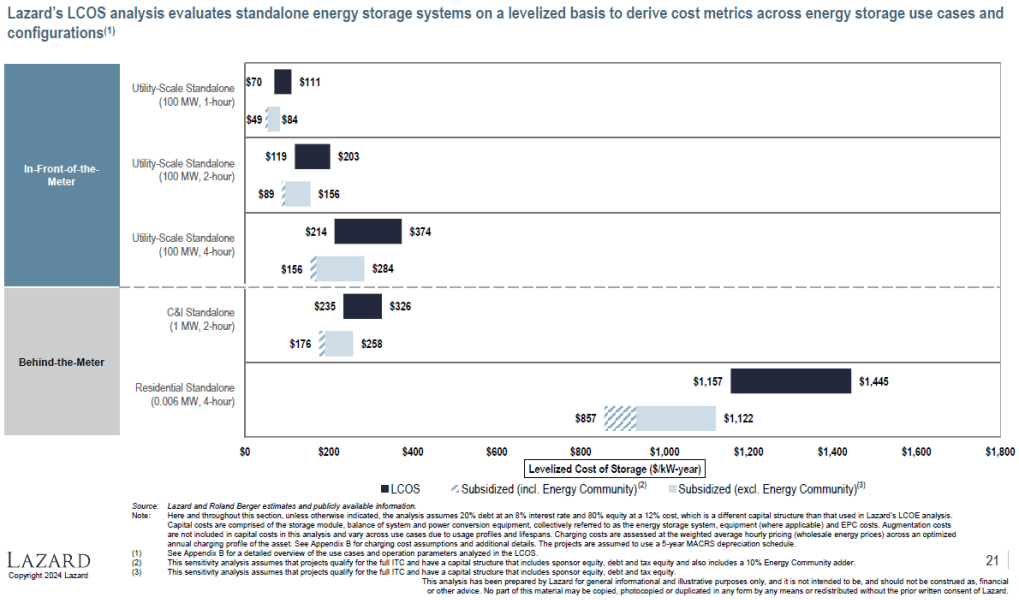

Q58. CAN YOU PLEASE OUTLINE THE TREND OF SOLAR PRICING SINCE THE HECATE AND CARNE PROJECTS WERE APPROVED?

A. Yes. Since the approval of EPE's recent Commission approved resources, recent industry trends have reflected the potential for price volatility. Numerous factors that have contributed to the rise in prices include high material and equipment costs (*e.g.* solar panels), rising labor costs in manufacturing and installation due to higher material prices, supply chain disruptions and tariffs. These factors add to the rise in RFP proposal prices and overall generation project price volatility.

Q59. IS THE SANTA TERESA PROJECT NECESSARY TO SATISFY 40

PERCENT RPS IN PLAN YEAR 2026?

A. Yes. As described in the following section, EPE needs 100 percent of the projected energy from the Santa Teresa project to meet RPS obligations for Plan Year 2026. Mr. Schichtl's direct testimony addresses EPE's request for flexibility and how this resource is used going forward.

Q60. DOES EPE INTEND TO ALLOCATE 100 PERCENT OF SANTA TERESA ENERGY TO NEW MEXICO IN FUTURE PLAN YEARS?

A. EPE is requesting approval to allocate 100% of the Santa Teresa Project's solar energy and associated RECs to New Mexico for Plan Year 2026. This allocation is intended to help EPE meet RPS compliance for 2026. For the Next Plan Year (2027), EPE is also reflecting 100 percent allocation of the solar resource to New Mexico in its RPS to provide visibility into projected compliance for 2027; however, EPE will re-evaluate and adjust the allocation as necessary in its next Renewable Energy Act Plan filing (May 1, 2026), taking into account updated system needs, load growth, and any changes in jurisdictional requirements.

Q61. HOW DOES THE SANTA TERESA PROJECT REASONABLY PROGRESS EPE TOWARD FUTURE RPS AND THE ZERO-CARBON STANDARD?

A. Overall, EPE is making reasonable and consistent progress towards meeting RPS, as shown by the Company successfully meeting its RPS target of 20 percent for the

Plan Year 2024. The addition of a solar and battery storage resource such as the Santa Teresa Project will generate additional RECs the Company can apply towards meeting the increasing RPS standards in New Mexico while reducing the reliance on fossil fuels and curbing greenhouse gas emissions. The addition of the battery component increases the consistency and reliability of the facility, while ultimately leading to a more resilient grid. Solar projects are often paired with BESS to help mitigate the intermittency of solar and aid in the full utilization of the resource. In addition, EPE is actively engaged in developing a new IRP and transitioning to an Integrated System Plan (ISP), which will further guide the Company's long-term resource portfolio toward achieving RPS targets and the zero-carbon standard in a systematic, forward-looking manner. Please see EPE's 2024 RPS Report attached to the Direct Testimony of EPE witness Schichtl, Exhibit JS-2, for a more detailed description of EPE's current 2025 IRP process.

Q62. IS EPE AWARE OF LOWER-COST COMMERCIAL RESOURCES THAT ARE AVAILABLE TO EPE AND CAN PROVIDE THE SAME PROGRESS TOWARD FUTURE RPS AND ZERO-CARBON STANDARDS?

A. No. On February 14, 2025, EPE issued a Short-Term New Mexico RPS RFP ("2025 Short Term NM RPS RFP") where the company solicited proposals of up to 150,000 MWh from renewable resources along with associated RECs beginning the period

of April 2025 through December 31, 2025. RECs were not to be from a rate-based utility plant as explained in New Mexico Administrative Code (NMAC) 17.9.572 Section 17 C(2). EPE issued the 2025 Short Term NM RPS RFP in response to the new COD for the Carne Project in order to comply with the 2025 RPS target of 40 percent. EPE received one notice of intent from a potential bidder, however the notice of intent did not go further as the bidder withdrew and EPE received no further bids for this RFP.

Q63. COULD EPE HAVE SELECTED A SMALLER PROJECT SIZED TO MEET, BUT NOT EXCEEED, EPE'S 40 PERCENT RPS IN 2026?

A. No. EPE issued its 2023 New Mexico RFP to solicit proposals that met its New Mexico resource needs. Of the 59 proposals received, there were no smaller projects that would have aided EPE in meeting its RPS target of 40 percent in 2026.

Q64. HAS EPE EVALUATED WHETHER ACCEPTABLE SYSTEM RELIABILITY WILL BE MAINTAINED WITH THE PROPOSED NEW RENEWABLE RESOURCE ADDITION?

A. Yes. EPE evaluated system reliability impacts associated with the addition of the Santa Teresa Project as part of its resource planning and RFP evaluation processes. EPE utilized the PLEXOS production cost and capacity expansion modeling

platform to simulate the operational performance of the proposed solar and battery storage resource over a multi-year horizon. These simulations incorporated the Santa Teresa Project's expected capacity contributions, energy dispatch profiles, round-trip battery efficiency, curtailment mitigation potential, and effective load carrying capability (ELCC). The modeling confirmed that the addition of the Santa Teresa Project supports acceptable system reliability by increasing renewable penetration while providing flexible, dispatchable capacity that can respond to system peak demands and reliability events. The battery storage component enhances EPE's ability to balance intermittent solar output during critical hours, and maintain operational reserves.

Q65. IS THE SANTA TERESA PROJECT CONSISTENT WITH EPE'S MOST RECENT COMMISSION-ACCEPTED IRP?

A. Yes. While the Santa Teresa Project was not specifically identified by name in EPE's 2021 IRP, it is fully consistent with the resource needs identified and the planning framework approved in that IRP.

The 2021 IRP modeled the need for additional renewable energy and flexible capacity resources to meet reliability and RPS requirements, but did not commit to specific projects or counterparties. The Hecate project, which was contemplated in the 2021 IRP, was later proposed and received Commission approval, but

subsequently defaulted.

Following the termination of the Hecate agreements, EPE applied the same IRP-based planning principles and modeling methodologies to select replacement resources through the 2023 Texas and New Mexico RFP processes. EPE used the same PLEXOS model framework from the 2021 IRP, updated key inputs such as fuel prices, purchased power costs, and load forecasts, and replaced generic resources with actual RFP bid proposals. Through this updated modeling, the Santa Teresa Project was selected as the least-cost, most reliable portfolio resource to meet the system's evolving needs.

In addition, EPE filed a Notice of Material Change with the Commission to address the removal of the Hecate project and to ensure continued alignment with EPE's approved IRP planning objectives.

V. ENERGY PROJECTIONS

Q66. HAS EPE DETERMINED THE AMOUNT OF ENERGY PROJECTED FROM THE APPROVED PORTFOLIO OF RESOURCES AND THE NEW RENEWABLE ENERGY PROJECT FOR PLAN YEAR AND THE NEXT PLAN YEAR?

A. Yes. EPE's 2026 and 2027 projections for renewable energy, to be provided from EPE's approved portfolio, the proposed new resource, and other approved renewable

resources are provided in Exhibit EV-1. Table EV-2 below summarizes the projected energy and associated RECs available, RPS percent, planned solar energy curtailments, and margin for 2026. For informational purposes, Table EV-2 also provides the same information for Next Plan Year (2027).

Table EV-2

Year	2026	2027
Net New Mexico Energy System Forecast (MWh)	2,147,008	2,518,185
RPS Target	40%	40%
RPS Energy Requirement to meet REA (MWh)	858,803	1,007,274
RPS Energy Approved Resources	268,289	266,948
Planned 2025 NM All-Source (Carne Project)	331,953	398,343
Planned NM Allocated Resource (Santa Teresa)	277,983	476,542
Planned Community Solar	49,804	59,466
Energy Purchased under Rate 16:		
Distributed Generation	18,255	19,692
Planned Solar Energy Curtailments	(24,552)	(23,424)
Planned Round-Trip Efficiency Losses	(21,531)	(29,360)
Total RECs Available	900,201	1,168,207
Projected RPS %	41.9%	46.4%
Yearly Margin (Deficiency)	41,398	160,933

Q67. DOES EPE PROJECT THAT ENERGY FROM THE RENEWABLE RESOURCES LISTED ABOVE WILL BE SUFFICIENT TO MEET THE 40 PERCENT RPS TARGET IN THE PLAN YEAR (2026)?

A. Yes. As described in the Direct Testimony of EPE witness Schichtl, with the

flexibility for additional allocation to New Mexico, Table EV-2 provides EPE's energy and REC projections (with the Santa Teresa project) through 2026 and shows, with the Santa Teresa project, that EPE will have sufficient renewable energy and RECs by 2026 to meet 40 percent RPS.

Q68. FOR INFORMATIONAL PURPOSES, DOES EPE PROJECT THAT ENERGY FROM THE RENEWABLE RESOURCES LISTED ABOVE WILL BE SUFFICIENT TO MEET THE 40 PERCENT RPS TARGET IN THE NEXT PLAN YEAR (2027)?

A. Yes. As described above, EPE's Plan includes allocating 100 percent of the solar portion of Santa Teresa to meet RPS, which translates to approximately 45 percent, to establish it is well positioned to meet RPS obligations in Plan Year 2027. However, EPE will reevaluate the allocation of Santa Teresa based on updated sales and energy projections in its new in its next plan filing.

Q69. PLEASE EXPLAIN EPE'S COMMUNITY SOLAR PROJECTIONS.

A. For the Plan Year 2026, EPE included both energy and RECs from the 15 MW Community Solar facility. EPE witness Schichtl explains the status of the Community Solar program in New Mexico.

Q70. HOW DID EPE DETERMINE PLANNED SOLAR CURTAILMENTS?

A. In EPE's last RPS Plan Application, EPE conducted a curtailment analysis using its production cost model Aurora. Aurora simulates an hourly dispatch for each day during a multi-year horizon. The curtailment analysis examined EPE's load to its fleet of dispatched generation, and renewable generation resources to determine if EPE was over generating in a particular hour that could potentially lead to curtailed solar energy. The curtailment analysis evaluated solar resources, specifically those that are system resources allocated to New Mexico based on its jurisdictional allocation; and those that are directly assigned to New Mexico. The Planned Solar Energy Curtailments for the Plan Year (2026) are included in Table EV-2 above.

Q71. DID EPE DETERMINE ROUND-TRIP EFFICIENCY LOSSES DUE TO BATTERY STORAGE?

A. Yes. Battery projects have round-trip efficiency losses based on manufacturer's specifications. Round-trip efficiency is measured as a percentage of the energy that is retained when storing energy into a battery. For example, the Santa Teresa ESA has an 85% round-trip efficiency. That means that approximately 15 MWh of every 100 MWh of energy will be lost when storing energy into the battery.

When calculating round-trip efficiency losses, the specifications of the battery need to be known. The first step is to determine the size of the battery. For

example, a four-hour, 50 MW battery (the requested amount in EPE's REA Plan filing) with a maximum capacity of 200 MWh (50 MW x 4 hours). Using a round-trip efficiency of 85%, EPE would need a total of 235 MWh (200 MWh / 85%) of energy to store 200 MWh of capacity in the battery. That means EPE would lose 35 MWh of energy per cycle when storing energy in that battery.

The next step is to know the battery's total cycles per year which is based on the manufacture's recommendation. One battery cycle is equal to fully charging the battery to its max capacity, *i.e.*, from 0% to 100%, and then fully discharging the battery from 100% to 0%. The Santa Teresa Agreement will provide a total of 340 cycles per year.

Assuming EPE cycles the battery the total 340 cycles per year, EPE can expect round-trip efficiency losses of approximately 11,900 MWh (340 cycles x 35 MWh of losses per cycle) on the first year. The capacity/energy amounts were then adjusted annually to account for the battery's round-trip efficiency degradation.

EPE created a row in its RPS tables as illustrated in Table EV-2 above that took into consideration any round-trip efficiency losses attributed to battery storage.

VI. <u>2026 PLAN COSTS</u>

Q72. WHAT ARE THE ESTIMATED PROCUREMENT COSTS FOR EPE'S 2026

PLAN?

A. The total estimated procurement costs are $43,956,901 for Plan Year (2026) and $56,291,811 for Next Plan Year (2027) for informational purposes.

Q73. PLEASE DESCRIBE THE PROCUREMENT COSTS ASSOCIATED WITH EPE'S 2026 REA PLAN.

A. The renewable resources with applicable RPS procurement costs are listed in Exhibit EV-3 to my testimony. The procurement costs for the Plan Year (2026) include approved RPS Procurements, costs of REC registration and tracking through WREGIS, and new resources as described above.

Q74. ARE THE PROCUREMENT COSTS FOR THE 2026 PLAN REASONABLE?

A. Yes. The Commission determined in EPE's previous REA Plan cases that EPE's costs for approved RPS Procurements carrying over into Plan Year (2026) and the Next Plan Year (2027) are reasonable. The reasonableness of the proposed allocation of the Santa Teresa Project is demonstrated by the comparison against recent prices for comparable energy resources elsewhere in the southwestern united states and other commercially available resources bid into the 2023 NM RPS RFP.

Q75. DID EPE CONSIDER STRATEGIES TO MINIMIZE COSTS OF

RENEWABLE ENERGY INTEGRATION, INCLUDING LOCATION, DIVERSITY, BALANCING AREA ACTIVITY, DEMAND-SIDE MANAGEMENT, RATE DESIGN, AND LOAD MANAGEMENT?

A. Yes. EPE's cost strategies are discussed in detail in Section B of EPE's 2024 RPS Report which is provided as Exhibit JS-2 to EPE witness Schichtl's Direct Testimony.

Q76. HAS EPE PROVIDED THE NEXT PLAN YEAR (2027) PROCUREMENT COSTS FOR INFORMATION PURPOSES ONLY?

A. Yes. The 2027 procurement costs are listed in Exhibit EV-3 to my testimony.

VII. DETERMINATION OF THE RCT

Q77. WHAT IS THE RCT AND HOW IS IT CALCULATED?

A. Rule 572 states that RCT is a customer protection mechanism that limits the customer bill impact resulting from annual REA plans and provides that the RCT in any plan year is an annual average levelized cost of $60.00/MWh at the point of interconnection of the renewable energy resource with the transmission system, adjusted for inflation. For the Plan Year (2026) the inflation-adjusted RCT is approximately $74.14/MWh. EPE calculated the adjusted RCT by using the Consumer Price Index ("CPI") for All Urban Consumers ("CPI-U") published by

the Bureau of Labor and Statistics ("BLS"). The average yearly CPI-U published by BLS for 2020 was 258.811 at the time the $60/MWh RCT was issued. In EPE's 2024 REA Plan filing, the BLS for 2024 was 312.332 and the RCT was calculated to be $72.41. The average CPI-U published by BLS from March 2024 through April 2025, which was the data available at the time EPE calculated the RCT, was 319.799. By dividing the CPI-U index of 319.799 by CPI-U index of 258.811, one could calculate the estimated inflation from year 2020 through April 2025 to be 23.56 percent. By increasing the RCT of $60/MWh by 23.56 percent, EPE calculated the adjusted RCT value to $74.14/MWh ($60/MWh * 1.235647).

The RCT is based on the calculated levelized cost of energy ("LCOE") of each project. The LCOE is calculated by taking the net present value of the project's estimated costs for the entire term then dividing by the net present value of its expected energy (MWh) for the entire term. If the project is a standalone renewable resource PPA, then the LCOE is calculated using the energy price ($/MWh) of the project, in which case, the LCOE will be the energy price ($/MWh) as proposed. If the project is a renewable resource paired with an energy storage PPA, then the RCT is based on both the project's net present value energy and capacity costs for the entire term ($) divided by its expected net present value energy (MWh) for the entire term.

Q78. IS THE PROPOSED COST OF NEW SANTA TERESA PROJECT BELOW

THE INFLATION ADJUSTED RCT?

A. Yes. The RCT calculation for the New Mexico portion of the proposed Santa Teresa Project is $45.67/MWh, which is below the inflation adjusted RCT amount of $74.14. The Santa Teresa Project calculation is derived from the project's net present value energy and capacity costs for the entire term ($) divided by its expected net present value energy (MWh) for the entire term.

Q79. IF REASONABLE COSTS OF TRANSMISSION ARE INCLUDED, IS THE LCOE STILL BELOW THE $74.14/MWH INFLATION ADJUSTED RCT?

A. Yes.

VIII. OTHER RULE 572 REQUIREMENTS

Q80. HAS EPE IDENTIFIED ANY MATERIAL CHANGES TO ITS COMMISSION-ACCEPTED 2021 IRP PLAN RESULTING FROM THIS PROPOSED REA PLAN FOR 2026?

A. Yes. Material changes to EPE's 2021 IRP Plan include the removal of the Hecate project, proposed reallocation of BV1 and new resources Santa Teresa Projects to New Mexico, and updates to EPE's Rate No. 16. Pursuant to Section 11(D) of 17.7.3 NMAC, Integrated Resource Plans for Electric Utilities, on March 1, 2024, EPE has already filed a Notice of Material Event to address the removal of the Hecate

resource and the addition of more of EPE's New Mexico jurisdictional share of BV1.

Q81. IS EPE'S PLAN OTHERWISE CONSISTENT WITH EPE'S LAST FILED IRP?

A. Yes. EPE's Plan is otherwise consistent with EPE's most recent 2021 IRP Plan accepted by the NMPRC in NMPRC Case No. 21-00242-UT.

Q82. DOES THIS CONCLUDE YOUR TESTIMONY?

A. Yes, it does.

NEW MEXICO RENEWABLE ENERGY ACT PROCUREMENT PLAN FOR PLAN YEAR 2026

EL PASO ELECTRIC COMPANY

MAY 1, 2025

TABLE OF CONTENTS

I. INTRODUCTION 4
II. DETERMINATION OF RPS (572.14(B)(1), (4)) 4
A. Plan Year RPS Calculations 4
B. Next Plan Year RPS Calculations 5
III. EPE'S RENEWABLE ENERGY PORTFOLIO 5
A. EPE's Approved RPS Procurements 6
B. Approved System Resources Contributing Renewable Energy and RECs Toward Compliance with RPS 7
C. RECs Generated by QFs 7
D. Proposed Reassignments ..... **Error! Bookmark not defined.**
1. BV1 Reassignment ..... **Error! Bookmark not defined.**
2. Macho Springs Reassignment ..... **Error! Bookmark not defined.**
IV. RENEWABLE ENERGY PROJECTIONS (572.14(C)(3)) 8
V. PROCUREMENT COSTS AND RCT (572.14(C)(1), (2), (3), (4), (5)) 9
A. Plan Year and Next Plan Year Procurement Costs 9
B. RCT Analysis 10
VI. RENEWABLE RIDER RATES FOR 2024 ((572.14(C)(5)) 11

GLOSSARY OF ACRONYMS AND DEFINED TERMS

Acronym/Defined Term	Meaning
2021 IRP Plan	EPE's last filed Integrated Resource Plan
Commission	New Mexico Public Regulation Commission
COD	Commercial Operation Date
DG	Distributed Generator
EPE	El Paso Electric
kWh	Kilowatt Watt Hour
LTPPA	Long Term Power Purchase Agreement
MW	Megawatt
MWh	Megawatt-hour
Next Plan Year	2027
Plan Year	2026
PPA	Purchased Power Agreement
REA	Renewable Energy Act (NMSA 1978, §§ 62-16-1 to -10 (2007 as amended through 2021))
RCT	Reasonable Cost Threshold
RPS	Renewable Portfolio Standard
Rule 572	17.9.572 NMAC

I. INTRODUCTION

El Paso Electric Company ("EPE" or "Company") files this Renewable Energy Act ("REA") Plan for Plan Year 2026 ("Plan" or "Plan for 2026") pursuant to Section 62-16-4(G) of the REA and the New Mexico Public Regulation Commission's ("NMPRC" or "Commission") Rule 17.9.572.14 NMAC ("Rule 572" or "Rule"). The Plan presents the 2026 ("Plan Year") data included herein for Commission approval and presents the 2027 ("Next Plan Year") data included herein for informational purposes.

II. SUMMARY OF PLAN FOR 2026

EPE's Plan to meet 40 percent RPS in 2026 using projected amounts of energy and associated renewable energy certificates ("RECs") from its approved renewable energy portfolio and one new solar energy resource with storage is presented for approval in this Plan. EPE's Plan provides information and data required under the REA and Rule 572 applicable to this Plan, including EPE's plan to comply with the RPS during Plan Year 2026 and to demonstrate reasonable and consistent progress toward meeting future RPS obligations. The Plan also includes a revised RPS Cost Rider to reflect expected procurement costs for the 2026 Plan Year adjusted for the reconciliation of actual 2024 RPS costs and rider revenues.

III. DETERMINATION OF RPS (572.14(C)(1))

A. Plan Year RPS Calculations

Table I below shows EPE's projected RPS calculation for the Plan Year (2026). In summary, EPE projects net New Mexico ("NM") jurisdictional kilowatt-hour ("kWh") sales will be 2,147,007,612. The corresponding RPS calculation for 2026 is 858,803,045 kWh, or 858,803 RECs, to meet 40 percent RPS.

Table I.

Line No.	Description	2026
	RPS Requirement	
1	Forecasted New Mexico Jurisdictional kWh Sales	2,154,662,004
2	NMSU Solar Project	7,654,392
3	Net Forecasted New Mexico Jurisdictional kWh Sales	2,147,007,612
4	Renewable Portfolio Standard	40.00%
5	Total RPS Requirement	858,803,045

B. Next Plan Year RPS Calculations

For informational purposes, Table II below shows EPE's projected RPS calculation for Next Plan Year (2027). In summary, EPE projects net NM jurisdictional kWh sales will be 2,518,185,443. The corresponding RPS calculation for 2027 is 1,007,274,177 kWh, or 1,007,274 RECs, to meet 40 percent RPS.

Table II.

Line No.	Description	2027
	RPS Requirement	
1	Forecasted New Mexico Jurisdictional kWh Sales	2,525,786,254
2	NMSU Solar Project	7,600,811
3	Net Forecasted New Mexico Jurisdictional kWh Sales	2,518,158,443
4	Renewable Portfolio Standard	40.00%
5	Total RPS Requirement	1,007,274,177

IV. EPE'S RENEWABLE ENERGY PORTFOLIO

The following describes EPE's renewable energy portfolio counted in determining compliance with applicable RPS requirements of the REA and Rule 572.

A. Approved RPS Procurements

Solar Roadrunner LLC ("Roadrunner") – A 20 MW solar photovoltaic ("PV") project located in Santa Teresa, New Mexico. Roadrunner is currently owned by Global Infrastructure Partners (Clearway Energy). Roadrunner provides energy and RECs to EPE through a 20-year Purchased Power Agreement ("PPA").

Hatch Solar Energy Center I, LLC ("Hatch") – A 5 MW solar PV facility located in Hatch, New Mexico. Hatch is owned by NextEra Energy Resources, LLC ("NextEra"). Hatch provides energy and RECs to EPE through a 25-year PPA.

SunE EPE1, LLC ("SunEdison 1") – A 10 MW solar facility located in Chaparral, New Mexico. SunEdison 1 is currently owned by Longroad Energy Services. SunEdison 1 provides energy and RECs to EPE through a 25-year PPA.

SunE EPE2, LLC ("SunEdison 2") – A 12 MW solar facility located in Las Cruces, New Mexico. The Facility is currently owned by Silicon Ranch Corporation. SunEdison 2 provides energy and RECs to EPE through a 25-year PPA.

Buena Vista Energy Center II, LLC ("BV2") – A 20 MW solar facility located in Otero, New Mexico. The BV2 facility is owned by NextEra. The BV2 facility provides energy and RECs to EPE through a 20-year PPA.

The Carne Project – A new 130 MW solar and 65 MW battery storage facility that is being built in Luna County, New Mexico. The facility is owned by D.E. Shaw Renewable Investments, L.L.C. ("DESRI") and is scheduled to be in service by February 27, 2026. Once in service, Carne will provide energy and RECs to EPE under a bundled price through a 20-year agreement between EPE and DESRI.

B. Approved System Resources Contributing Renewable Energy and RECs Toward Compliance with RPS

Macho Springs Solar, LLC ("Macho Springs") – A 50 MW solar facility located near Deming, New Mexico. Macho Springs is currently owned by the Southern Power Company. Macho Springs is utilized by EPE as a system resource. Macho Springs facility provides energy to EPE's system under a 20-year PPA jurisdictionally allocated to New Mexico and Texas. The energy and RECs allocated to New Mexico customers (approximately 21 percent) are used for compliance with the RPS and the Commission approved energy purchased costs are recovered through the fuel and purchased power cost adjustment clause ("FPPCAC") mechanism on a jurisdictional basis.

Holloman Atlas Solar Array-Holloman Air Force Base ("HAFB") – A 5 MW solar project located at Holloman Air Force Base in New Mexico and owned by EPE. As a dedicated customer facility, HAFB provides energy and associated RECs at no additional cost to the New Mexico RPS.

Buena Vista Energy Center 1 ("BV1") – A 100 MW solar and 50 MW battery storage facility located in Otero, New Mexico. The facility is owned by NextEra. BV1 provides energy to EPE's system under a 20-year PPA jurisdictionally allocated between Texas and New Mexico. Consistent with Commission approvals, the energy and RECs allocated to New Mexico customers (approximately 21%) is used for compliance with the RPS and the Commission approved energy purchased costs are recovered through the FPPCAC mechanism on a jurisdictional basis.

C. RECs Generated by QFs

Distributed Generation – All of EPE's DG customers are QFs as defined by PURPA, required to self-certify pursuant to EPE's filed Form No. 35- Notice of Self Certification. EPE

purchases excess energy from its DG customers pursuant to Rate No. 16 and registers the corresponding RECs with WREGIS towards meeting the RPS.

New customers can interconnect their generating facilities to EPE's system and participate under the existing tariffs' provisions for metering options and sell exported energy to EPE.

D. New (RPS Procurement/System Resource)

Santa Teresa Project - A new 150 MW solar and 150 MW battery storage facility that is being built in Doña Ana County, New Mexico. The facility is owned by D.E. Shaw Renewable Investments, L.L.C. ("DESRI") and is scheduled to be in service by June 2026. Once in service, Santa Teresa will provide energy and RECs to EPE's system allocated between New Mexico and Texas jurisdictions under a bundled price through a 20-year agreement between EPE and DESRI.

In the 2026 Plan, EPE seeks authorization to purchase and assign 100 percent of the renewable energy generated from the Santa Teresa Project in 2026, which is needed to meet the 40 percent RPS requirement in 2026, and to purchase and include 50 MW of the battery energy storage component of the project in EPE's RPS Portfolio. EPE additionally seeks authorization for the flexibility to modify allocation of energy from the Santa Teresa Facility as needed to meet the RPS.

E. RENEWABLE ENERGY PROJECTIONS (572.14(C)(3))

The following Table III provides EPE's Plan renewable energy and REC projections for the Plan Year (2026) and Next Plan Year (2027).[1]

Table III.

[1] The projections in Table III assume the Carne Project and the Santa Teresa Projects will be commercially operable by the above identified CODs as discussed in the Direct Testimony of Emmanuel Villalobos.

Year	2026	2027
Net New Mexico Energy System Forecast (MWh)	2,147,008	2,518,185
RPS Target	40%	40%
RPS Energy Requirement to meet REA (MWh)	858,803	1,007,274
RPS Energy Approved Resources	268,289	266,948
Planned 2025 NM All-Source (Carne Project)	331,953	398,343
Planned NM Allocated Resource (Santa Teresa)	277,983	476,542
Planned Community Solar	49,804	59,466
Energy Purchased under Rate 16:		
Distributed Generation	18,255	19,692
Planned Solar Energy Curtailments	(24,552)	(23,424)
Planned Round-Trip Efficiency Losses	(21,531)	(29,360)
Total RECs Available	900,201	1,168,207
Projected RPS %	41.9%	46.4%
Yearly Margin (Deficiency)	41,398	160,933

Based on these Table III projections, EPE's Plan is expected to result in approximately 900,201 RECs in the Plan Year (2026) to apply towards the applicable RPS. This is just over the RECs EPE projects will be needed to meet 40 percent RPS in 2026 resulting in a margin of 41,398 RECs at the end of 2026. For information purposes, EPE Table III projections also show that EPE is well positioned to exceed 40 percent RPS for Next Plan Year (2027).

V. PROCUREMENT COSTS AND RCT ANALYSIS (572.12, 572.14(C)(1), (2), (3), (4), (5))

A. Cost of Procurement for Santa Teresa Project

The cost of procurement in the Plan Year (2026) and Next Plan Year (2027) for the new Santa Teresa Project is $12,580,103 and $21,565,891, respectively.

B. Plan Year and Next Plan Year Procurement Costs

EPE projects that its Plan Year (2026) and Next Plan Year (2027) procurement costs will be approximately $43,956,901 and $56,291,811, respectively. Table IV below lists, by resource, the amount of renewable energy and associated RECs EPE plans to provide in the Plan Year

(2026) and Next Plan Year (2027) required to comply with the RPS and the Plan Year (2026) and Next Plan Year (2027) procurement costs.

Table IV.

PROCUREMENT PLAN YEAR RECS AND COSTS						
	2026			2027		
	(kWh)	RECs (MWh)	($)	(kWh)	RECs (MWh)	($)
NRG [1]	45,588,237	45,588	5,810,221	45,360,296	45,360	5,781,170
SunEdison [1]	56,128,494	56,128	5,887,318	55,847,852	55,848	5,857,881
Macho Springs [2]	26,343,676	26,344	-	26,211,958	26,212	-
Hatch [1]	9,960,834	9,961	1,185,339	9,911,030	9,911	1,179,413
Holloman [2]	9,960,834	9,961	-	9,911,030	9,911	-
Buena Vista Energy Center 1 [2]	59,976,781	59,977	-	59,676,897	59,677	-
Buena Vista Energy Center 2 [1]	60,330,491	60,330	1,395,444	60,028,839	60,029	1,388,467
Carne Solar Project [3]	331,952,500	331,953	9,945,297	398,343,000	398,343	11,934,356
Carne Solar Project Battery			7,143,500			8,572,200
DG REC [4]	18,254,970	18,255	-	19,692,222	19,692	-
New Mexico Community Solar	49,804,171	49,804	-	59,466,181	59,466	-
Santa Teresa [5]	277,982,833	277,983	8,047,603	476,542,000	476,542	13,795,891
Santa Teresa Battery			4,532,500			7,770,000
WREGIS	-	-	9,679	0	0	12,433
Total	946,283,824	946,284	43,956,901	1,220,991,305	1,220,991	56,291,811

Notes:

[1] The procurement cost include energy and REC.
[2] There is zero RPS procurement cost since cost are recovered outside of the RPS cost rider; however, RECs are utilized for RPS.
[3] The Carne Project has an anticipated COD of February 27, 2026 and a capacity cost of $10.99/kW-month.
[4] There is a zero RPS procurement costs for DG RECs purchased pursuant to Rate No.16.
[5] The Santa Teresa procurement resource cost includes energy and RECs.

C. RCT Analysis

EPE's RCT analysis shows that the proposed Santa Teresa Project procurement cost will be below the inflation adjusted RCT for 2026.

The RCT for 2026 adjusted for inflation is $74.14/MWh. EPE calculated the inflation adjusted RCT by using the Consumer Price Index ("CPI") for all Urban Consumers ("CPI-U") published by the Bureau of Labor and Statistics ("BLS").

The RCT calculation for the proposed Santa Teresa Project is $45.67, which is below the inflation adjusted RCT amount of $74.14. EPE witness Emmanuel Villalobos explains the RCT calculation in more detail in his direct testimony.

VI. RENEWABLE RIDER RATES FOR 2026 ((572.14(C)(5))

EPE projects that the revenue requirement to be recovered during 2026 through the RPS Rider, including WREGIS fees, will be $43,956,901. EPE proposes to revise the existing rates in the RPS Rider for billing in 2026 to recover its projected procurement costs, adjusted to include a reconciliation of actual 2024 costs and revenue of $554,720. The revised tariff is shown in Exhibit RFG-1 and included with Advice Notice No. 309 filed concurrent with this application.

EPE's NEW MEXICO RENEWABLE PORTFOLIO STANDARD REQUIREMENT

	(a)	(b)	(d)	(e)
Line No.	Description	Reference	2026	2027
	RPS Requirement			
1	Forecasted New Mexico Jurisdictional kWh Sales	See Note (1)	2,154,662,004	2,525,786,254
2	NMSU Solar Project		7,654,392	7,600,811
3	Net Forecasted New Mexico Jurisdictional kWh Sales	Line 1 - Line 2	2,147,007,612	2,518,185,443
4	Renewable Portfolio Standard		40.00%	40.00%
5	Total RPS Requirement	Line 3 x Line 4	858,803,045	1,007,274,177

Notes:
(1) EPE's New Mexico jurisdictional retail energy sales are based on EPE's 2025 Long-Term Forecast.

PROCUREMENT PLAN YEAR RECS AND COSTS						
	2026			2027		
	(kWh)	RECs (MWh)	($)	(kWh)	RECs (MWh)	($)
NRG [1]	45,588,237	45,588	5,810,221	45,360,296	45,360	5,781,170
SunEdison [1]	56,128,494	56,128	5,887,318	55,847,852	55,848	5,857,881
Macho Springs [2]	26,343,676	26,344	-	26,211,958	26,212	-
Hatch [1]	9,960,834	9,961	1,185,339	9,911,030	9,911	1,179,413
Holloman [2]	9,960,834	9,961	-	9,911,030	9,911	-
Buena Vista Energy Center 1 [2]	59,976,781	59,977	-	59,676,897	59,677	-
Buena Vista Energy Center 2 [1]	60,330,491	60,330	1,395,444	60,028,839	60,029	1,388,467
Carne Solar Project [3]	331,952,500	331,953	9,945,297	398,343,000	398,343	11,934,356
Carne Solar Project Battery			7,143,500			8,572,200
DG REC [4]	18,254,970	18,255	-	19,692,222	19,692	-
New Mexico Community Solar	49,804,171	49,804	-	59,466,181	59,466	-
Santa Teresa [5]	277,982,833	277,983	8,047,603	476,542,000	476,542	13,795,891
Santa Teresa Battery			4,532,500			7,770,000
WREGIS	-	-	9,679	0	0	12,433
Total	946,283,824	946,284	43,956,901	1,220,991,305	1,220,991	56,291,811

Notes:

[1] The procurement cost include energy and REC.
[2] There is zero RPS procurement cost since cost are recovered outside of the RPS cost rider; however, RECs are utilized for RPS.
[3] The Carne Project has an anticipated COD of February 27, 2026 and a capacity cost of $10.99/kW-month.
[4] There is a zero RPS procurement costs for DG RECs purchased pursuant to Rate No.16.
[5] The Santa Teresa procurement resource cost includes energy and RECs.

SOLAR POWER PURCHASE AGREEMENT

between

EL PASO ELECTRIC COMPANY,
a Texas corporation,

and

SANTA TERESA SOLAR, LLC,
a Delaware limited liability company

Dated as of November 18, 2024

TABLE OF CONTENTS

Article 1 Definitions and Rules of Interpretation 1

1.1 Definitions 1
1.2 Rules of Construction 21
1.3 Interpretation with Interconnection Agreements 21
1.4 Interpretation of Arrangements for Electric Supply to the Generating Facility 22

Article 2 Term 22

Article 3 Generating Facility Description 23

3.1 Commercial Terms 23
3.2 Generating Facility 23
3.3 Location 23
3.4 General Design of the Generating Facility 24
3.5 Expected Commercial Operation Date 24
3.6 Extension 25
3.7 Solar Capacity Delay Damages 25
3.8 Solar Capacity Shortfall Damages 26
3.9 Test Energy and Early Blocks 26
3.10 Notice of Commercial Operation 26

Article 4 AGC; EPE Curtailment; Reliability Curtailment 27

4.1 AGC; EPE Curtailment and Reliability Curtailment 27

Article 5 Delivery and Metering 28

5.1 Delivery Arrangements 28
5.2 Availability Reporting 29
5.3 Electric Metering Devices 29
5.4 Adjustment for Inaccurate Meters 30

Article 6 Conditions Precedent; Acknowledgment and Agreement 31

6.1 Conditions Precedent 31

Article 7 Sale and Purchase of Energy Output 31

7.1 Sale and Purchase of Energy Output 31
7.2 Title and Risk of Loss 32
7.3 Future Environmental Attributes 32
7.4 Scheduling 33
7.5 Forced Outages 33

Article 8 Payment Calculations 34

8.1 Billing Components....34
8.2 Payment Support Requirement....35
8.3 Survival on Termination....35

Article 9 Billing and Payment Procedures....35

9.1 Statements and Payment of Electricity Payments....35
9.2 Miscellaneous Payments....36
9.3 Currency and Method of Payment....36
9.4 Default Interest....36
9.5 Disputed Items....37
9.6 Statement Errors....37
9.7 Taxes....37
9.8 Setoff and Payment Adjustments....38
9.9 Netting....39
9.10 Survival on Termination....39

Article 10 Operations and Maintenance....39

10.1 Construction of the Generating Facility....39
10.2 Commissioning Tests....40
10.3 Access to and Inspection of the Generating Facility....40
10.4 Operating Parameters....41
10.5 Operating Procedures....42
10.6 Generating Facility Maintenance....42
10.7 Sales to Third Parties....43
10.8 Weather Stations....43
10.9 Performance Guarantee....44

Article 11 RECs and Environmental Attributes....44

11.1 Sale of RECs and Environmental Attributes....44

Article 12 Purchase Option....45

12.1 EPE's Purchase Option on Seller Event of Default....45
12.2 Determination of Fair Market Value of the Generating Facility....46
12.3 Option Exercise....47

Article 13 Default and Remedies....48

13.1 Events of Default of Seller....48
13.2 Events of Default of EPE....50
13.3 Damages Prior to Termination....51
13.4 Termination....52
13.5 [Reserved]....53

13.6 Remedies Cumulative....53
13.7 Waiver and Exclusion of Other Damages....53
13.8 Payment of Amounts Due to EPE....54
13.9 Duty to Mitigate....54
13.10 Security Rights....54
13.11 Limit on Seller Liability....54

Article 14 Contract Administration and Notices....55

14.1 Notices in Writing....55
14.2 Representative for Notices....55
14.3 Authority of Representatives....55
14.4 Records....55
14.5 Provision of Real-Time Data....57
14.6 Examination of Records....57
14.7 Exhibits....57
14.8 Resolution of Issues....57

Article 15 Force Majeure....58

15.1 Definition....58
15.2 Notification Obligations....60
15.3 Duty to Mitigate....60

Article 16 Representations, Warranties and Covenants....60

16.1 Seller's Representations, Warranties and Covenants....60
16.2 EPE's Representations and Warranties....62

Article 17 Insurance....63

17.1 Evidence of Insurance....63
17.2 Term and Modification of Insurance....63
17.3 Endorsements and Other Requirements....64

Article 18 Legal and Regulatory Compliance....64

18.1 Applicable Laws....64
18.2 Governmental Approvals....64
18.3 [Reserved]....65
18.4 Compliance with Reliability Standards....65
18.5 Compliance Information....65

Article 19 Assignment and Other Transfer Restrictions....65

19.1 No Assignment Without Consent....65
19.2 Conditions on Transfers....66
19.3 Change of Control....67
19.4 Transfer Without Consent Is Null and Void....67

19.5 Subcontracting 67
19.6 Assignment to Lenders 67

Article 20 Credit and Security Requirements 68

20.1 Security 68
20.2 Form of Security 69
20.3 Grant of Security Interest 70
20.4 Use of Security 70

Article 21 Indemnity; Insurance Proceeds 70

21.1 Indemnification 70
21.2 Notice of Claims; Procedure 71
21.3 Survival of Obligations 72
21.4 Insurance Proceeds 72

Article 22 Allocation of Governmental Charges 72

22.1 Governmental Charges 72
22.2 Compliance Actions 73

Article 23 Incorporation of Federal Laws 74

23.1 EEO and Notice of Labor Rights 74
23.2 EEO Reporting 75
23.3 [Reserved] 75
23.4 Anti-Corruption Laws 75

Article 24 Confidentiality 76

24.1 Definition of Confidential Information 76
24.2 Duty to Maintain Confidentiality 77
24.3 Irreparable Injury; Remedies 78
24.4 Disclosure by Seller to Lenders, Etc. 79
24.5 Disclosure by EPE to Examiners, Etc. 79

Article 25 Miscellaneous 79

25.1 Waiver 79
25.2 Fines and Penalties 79
25.3 Rate Changes 79
25.4 Disclaimer of Certain Third Party Beneficiary Rights 80
25.5 Relationship of the Parties 80
25.6 Equal Employment Opportunity Compliance Certification 80
25.7 Survival of Obligations 80
25.8 Severability 81
25.9 Service Contract 81
25.10 Complete Agreement; Amendments 81

25.11 Binding Effect 81
25.12 Headings 81
25.13 Counterparts 82
25.14 Governing Law 82
25.15 Press Releases and Media Contact 82
25.16 Forward Contract Merchants 82
25.17 Accounting Matters 82
25.18 Telephone Recording 84

EXHIBITS

Exhibit A	Description of Generating Facility and Site Map
Exhibit B	One-Line Diagram of Generating Facility and Interconnection Facilities
Exhibit C	Description of Site
Exhibit D	Notice Addresses
Exhibit E	Seller's Required Governmental Authority Permits, Consents, Approvals, Licenses, and Authorizations to be Obtained
Exhibit F	Commissioning and Testing
Exhibit G	Insurance Coverages
Exhibit H	Form of Attestation and Bill of Sale
Exhibit I	Performance Guarantee
Exhibit J	Form of Seller Guaranty
Exhibit K	Commercial Operation Form of Certification
Exhibit L	Solar Capacity Delay Damage Rate
Exhibit M	Example Calculation of Solar Energy Payment

SOLAR POWER PURCHASE AGREEMENT

This Solar Power Purchase Agreement, as may be amended from time to time, is entered into as of November 18, 2024 ("***Execution Date***"), by and between

1. **El Paso Electric Company**, a Texas corporation, whose principal place of business is 100 North Stanton Street, El Paso, Texas 79901 ("***EPE***"), and

2. **Santa Teresa Solar, LLC**, a Delaware limited liability company, whose principal place of business is 575 Fifth Avenue, 24th Floor, New York, New York 10017 ("***Seller***").

EPE and Seller may be referred to in this PPA individually as a "***Party***" and collectively as the "***Parties***."

RECITALS

A. EPE is a public utility that owns and operates electric generation, transmission, and distribution facilities and is subject to (i) the laws of the State of New Mexico and the rules and regulations of the New Mexico Public Regulation Commission and (ii) the laws of the State of Texas and the rules and regulations of the Public Utility Commission of Texas.

B. Seller desires to develop, design, construct, own and operate a photovoltaic solar electricity generating facility having a designed net power output capability of One Hundred Fifty (150) MW, as further defined in this PPA and in Exhibit A.

C. Seller desires to generate, sell and deliver to EPE the Energy generated by the Generating Facility and any and all associated or correlative Renewable Energy Certificates and other Environmental Attributes, and EPE agrees to buy the same from Seller, in accordance with the terms and conditions set forth in this PPA,

NOW, THEREFORE, in consideration of the mutual covenants herein contained, the sufficiency and adequacy of which are hereby acknowledged, the Parties agree to the following:

ARTICLE 1 DEFINITIONS AND RULES OF INTERPRETATION

1.1 Definitions

The following terms shall have the meanings set forth in this Section 1.1:

"***Abandonment***" means (a) a cessation of work and operations at the Generating Facility for more than ninety (90) Days by Seller or Seller's contractors but only if such cessation is not in

accordance with Prudent Utility Practices or caused by a Force Majeure Event, or (b) the relinquishment of possession and control of the Generating Facility (or any material portion thereof) by Seller, other than a transfer permitted under this PPA.

"***AC***" means alternating electric current.

"***Accounting Standards***" has the meaning set forth in Section 25.17.

"***Additional Consents***" means the approvals, consents, authorizations, or other requirements not listed in the definition of Governmental Approvals in this PPA that are required from any Governmental Authority with respect to the Generating Facility.

"***Affiliate***" of any named Person or entity means any other person or entity that controls, is under the control of, or is under common control with, the named entity. The term "control" (including the terms "controls", "under the control of", and "under common control with") means the possession, directly or indirectly, of the power to direct or cause the direction of the management and policies of a Person or entity, whether through ownership of fifty percent (50%) or more of the outstanding capital stock or other equity interests of any class of voting securities, by contract, or otherwise.

"***AGC***" stands for "Automatic Generation Control" and means energy management system equipment that accepts communications from the System Control Center and automatically adjusts the generation quantity of the Generating Facility, including communication circuits to communicate operating information for the Generating Facility to EPE's representatives on a real-time basis for the purpose of telemetering, supervisory control/data acquisition, and voice communications.

"***Agreed Compliance Costs***" has the meaning set forth in Section 22.2.2.

"***Ancillary Services***" means operating reserves, regulation, reactive supply, voltage control, frequency response, and other products associated with electric generation and Energy, in each case that the Generating Facility is capable of providing.

"***Anti-Corruption Laws***" has the meaning set forth in Section 23.4(a).

"***Applicable Law***" means all applicable laws, statutes, treaties, codes, ordinances, regulations, certificates, orders, licenses, and permits of any Governmental Authority, now in effect or hereafter enacted, amendments to any of the foregoing, interpretations of any of the foregoing by a Governmental Authority having jurisdiction over this PPA and matters related thereto, the Parties or the Generating Facility, and all applicable judicial, administrative, arbitration and regulatory decrees, judgments, injunctions, writs, orders, awards, or like actions (including those relating to human health, safety, the natural environment, or otherwise).

"***Attestation and Bill of Sale***" has the meaning set forth in Section 9.1.3.

"***Back-Up Metering***" has the meaning set forth in Section 5.3.4.

"***Balancing Area***" or "***BA***" has the meaning given by NERC in its Glossary of Terms Used in NERC Reliability Standards, as may be amended from time to time.

"***Bankruptcy Code***" means the United States Bankruptcy Code, 11 U.S.C. § 101 *et seq*., as amended from time to time.

"***Business Day***" means any calendar Day that is not a Saturday, a Sunday, or a state and/or federal recognized holiday where banks in El Paso, Texas, are permitted or authorized to close.

"***CAISO***" means the California Independent System Operator.

"***CAISO EIM***" means the California Independent System Operator Energy Imbalance Market or any successor thereto.

"***CAISO EIM Curtailment***" means any curtailment ordered or instructed by CAISO or any curtailment arising out of or resulting from the Generating Facility's or Energy Storage Facility's participation in the CAISO EIM.

"***Change of Control***" means any circumstance in which Ultimate Parent ceases to own, directly or indirectly through one or more intermediate entities, at least fifty percent (50%) of the outstanding equity or voting interests in Seller; *provided,* that any equity or voting interests issued to a Tax Equity Investor shall be disregarded for purposes of calculating whether the Ultimate Parent continues to own at least fifty percent (50%) of the equity of, or voting interest in, Seller.

"***Code***" means the U.S. Internal Revenue Code of 1986, including applicable rules and regulations promulgated thereunder, as amended from time to time.

"***Commercial Operation***" means that (a) Solar Units with an aggregate capacity of at least ninety percent (90%) of the Guaranteed Solar Capacity have been constructed, commissioned, tested, and proven capable of delivering Energy on a sustained basis without experiencing any abnormal or unsafe operating conditions on any interconnected system; (b) Seller is not in breach of the Interconnection Agreements; (c) Seller has achieved commercial operation under the Interconnection Agreements; (d) any testing of the Generating Facility required to be performed under the Interconnection Agreements on or before the Commercial Operation Date has been performed in accordance with the requirements of the Interconnection Agreements; (e) the Shared Facilities Agreement has been accepted for filing by FERC (if required by FERC) and is in full force and effect, and Seller is not in breach of the Shared Facilities Agreement; (f) all Seller required permits, required consents, and Governmental Approvals are in full force and effect; (g) Seller has obtained required insurance coverage as set forth in this PPA; and (h) Operating Procedures have been finalized and agreed to between the Parties consistent with Section 10.5.1.

For the avoidance of doubt, obtaining approval from NMPRC for the execution and performance of this PPA shall not be a condition precedent to achieving Commercial Operation.

"***Commercial Operation Date***" means the date on which Seller submits to EPE (a) a written certification from an officer of Seller that Commercial Operation has commenced, (b) a certification from a Licensed Professional Engineer, substantially in the form attached hereto as Exhibit K, and all fees and costs associated with the Licensed Professional Engineer shall be borne by Seller, and (c) Seller shall have delivered the Delivery Term Security to EPE in accordance with Article 20.

"***Commercial Operation Year***" means a period of twelve (12) consecutive Months; *provided,* that the first Commercial Operation Year shall commence on the Commercial Operation Date and end on the last Day of the Month that is twelve (12) full Months after the Commercial Operation Date, and each subsequent Commercial Operation Year shall be the twelve (12) Month period commencing at the end of the prior Commercial Operation Year.

"***Commissioning Tests***" has the meaning set forth in Section 10.2.

"***Compliance Actions***" has the meaning set forth in Section 22.2.1.

"***Compliance Cost Cap***" has the meaning set forth in Section 22.2.1.

"***Confidential Information***" has the meaning set forth in Section 24.1.

"***Contract Value***" means the present value of the Solar Energy Payments for each Commercial Operation Year (or portion thereof) remaining in the Term, determined without reference to the early termination, of (a) the Expected Generation for such Commercial Operation Year (or portion thereof) remaining in the Term, multiplied by (b) the sum of (i) the Solar Energy Output Payment Rate, plus (ii) the Grossed-Up PTC. All elements of the foregoing calculation shall be determined in a commercially reasonable manner. The present values of the monthly payments from their payment dates in the foregoing calculation shall be determined using a discount factor equal to the latest weighted average cost of capital as reported in the then-most recent NMPRC Rule 510 Annual Reporting filing.

"***COVID-19***" means the disease named coronavirus disease 2019 (COVID-19) by the World Health Organization and caused by the virus named Severe Acute Respiratory Syndrome Coronavirus 2 (SARS-CoV-2) by the International Committee on Taxonomy of Viruses and any mutations thereof.

"***Damage Rate***" means the damage rate (in $ / MW-Day) set forth in Exhibit L for each Day during which Delayed Solar Capacity exists, subject to Section 3.7.

"***Day***" means a calendar day and includes Saturdays, Sundays, and holidays; if a payment falls due on a Day that is not a Business Day, the payment will be due on the next Business Day thereafter.

"***DC***" means direct current.

"***Deemed Delivered Energy***" has the meaning set forth in Section 4.1.1.

"***Deemed Delivered Energy Price***" means, for any quantity of Deemed Delivered Energy, the sum of (a) the Solar Energy Output Payment Rate, plus (b) the Grossed-Up PTC.

"***Default Rate***" has the meaning set forth in Section 9.4.

"***Defaulting Party***" means the Party with respect to which an Event of Default under Article 13 has occurred.

"***Deficient Volume***" has the meaning set forth in Exhibit I.

"***Delayed Solar Capacity***" means, as of the determination date, the difference between (i) the Guaranteed Solar Capacity minus (ii) the Installed Solar Capacity.

"***Delivery Term***" has the meaning set forth in Section 7.1.

"***Delivery Term Security***" has the meaning set forth in Section 20.1.2(b).

"***Development Security***" has the meaning set forth in Section 20.1.1(b).

"***Disclosing Party***" has the meaning set forth in Section 24.1(a).

"***Dispute Notice***" has the meaning set forth in Section 14.8.

"***Disputing Party***" has the meaning set forth in Section 9.5.1.

"***Dollars***" means the lawful currency of the United States of America.

"***Downgrade Event***" shall mean that the long-term credit rating of a Person's long-term senior unsecured debt is not "Baa2" or higher by Moody's or "BBB" or higher by S&P.

"***Early Blocks***" has the meaning set forth in Section 3.9.

"***Early Termination Date***" has the meaning set forth in Section 13.4.

"***Electric Interconnection Point***" means the physical point at which electrical interconnection is made between the Generating Facility and the Transmission Provider's Transmission System.

"***Electric Metering Device(s)***" means all metering and data processing equipment used to measure, record, or transmit data relating to the Energy Output generated by the Generating Facility. Electric Metering Devices include the metering current transformers and the metering voltage transformers.

"***Emergency Condition***" means (a) a condition or situation that presents an imminent physical threat of danger to life, health, or property, and/or could reasonably be expected in the opinion of the Transmission Provider to cause a significant disruption to the Transmission Provider's Transmission System or otherwise be required in accordance with the requirements of the Reliability Coordinator and/or NERC/WECC operating policies and criteria, or (b) any system condition not consistent with Prudent Utility Practices. Emergency Condition shall include any condition that is considered an "Emergency" as defined by NERC in the Glossary of Terms Used in NERC Reliability Standards, as may be amended from time to time.

"***Energy***" means three-phase, 60-cycle alternating current electric energy, expressed in units of kWh or MWh, generated by the Generating Facility and delivered at a nominal voltage to the Point of Delivery or to the Solar Charging Point, as measured by Electric Metering Devices.

"***Energy Output***" means Metered Output, Environmental Attributes (including RECs), Ancillary Services, and associated electrical capacity rights generated by the Generating Facility. Energy Output shall not exceed One Hundred Fifty (150) MW unless mutually agreed upon, in advance, by the Parties in writing.

"***Energy Storage Facility***" means the co-located energy storage facility owned by Seller Storage Affiliate and located in Doña Ana County, New Mexico, with a designed maximum power charge and discharge capability of One Hundred Fifty (150) MW / Six Hundred (600) MWh, consisting of an Energy Storage System (as defined in the ESA), step-up transformers, output breakers, protective and associated equipment necessary to charge, store, and discharge electricity per EPE's dispatch elections.

"***Environmental Attributes***" means all attributes, aspects, characteristics, claims, credits, benefits, reductions, offsets, or allowances of an environmental nature that are created or otherwise arise from the Generating Facility's generation of electricity from renewable energy resources in contrast with the generation of electricity using nuclear or fossil fuels or other traditional resources. Forms of such attributes include any and all environmental air quality credits, green credits, including carbon credits, emissions reduction credits, certificates, tags, offsets, allowances, or similar products or rights, howsoever entitled, (i) resulting from the avoidance of the emission of any gas, chemical, or other substance, including mercury, nitrogen oxide, sulfur dioxide, carbon dioxide, carbon monoxide, particulate matter or similar pollutants or contaminants of air, water or soil, gas, chemical, or other substance, and (ii) attributable to the generation, purchase, sale, or use of Energy. Environmental Attributes include those currently existing or arising during the Delivery Term under local, state, regional, federal, or international legislation or regulation relevant to the avoidance of any emission described above under any governmental, regulatory, or voluntary

program, including the United Nations Framework Convention on Climate Change and related Kyoto Protocol or other programs, laws, or regulations. Environmental Attributes include the reporting rights related to any such attributes, aspects, characteristics, claims, credits, benefits, reductions, offsets, or allowances, including the right of a Person to report the ownership thereof in compliance with federal or state law, if applicable, or otherwise to a federal or state agency or any other Person. Environmental Attributes specifically exclude (i) Tax Benefits, and (ii) any Energy, reliability, or other power attributes from the Generating Facility.

"***Environmental Contamination***" means the introduction or presence of Hazardous Materials at such levels, quantities, or location, or of such form or character, as to constitute a violation of federal, state, or local laws or regulations, and present a material risk under federal, state, or local laws and regulations that a Site will not be available or usable, whether in whole or in part, for the purposes contemplated by this PPA.

"***EPE***" has the meaning set forth in the introductory paragraph of this PPA.

"***EPE Costs***" means (a) brokerage fees, commissions, and other similar third party transaction costs and expenses reasonably incurred and documented by EPE either in terminating any arrangement pursuant to which it has hedged its obligations under this PPA or entering into new arrangements which replace this PPA; and (b) all reasonable attorneys' fees and expenses incurred by EPE in connection with the termination of this PPA, to the extent such costs are not already accounted for under Replacement Energy Costs.

"***EPE Curtailment***" means any curtailment of the Generating Facility other than a Reliability Curtailment or a Transmission Provider Curtailment, and includes the curtailments described in Section 4.1.1.

"***EPE Termination Payment***" means the sum of (a) the aggregate of all amounts then owed from Seller to EPE less any amounts owed from EPE to Seller, plus (b) the positive difference, if any, between (i) the net present value of the Replacement Energy Costs and (ii) the Contract Value, plus (c) reasonable EPE Costs all using a discount factor equal to the latest weighted average cost of capital as reported in the then-most recent NMPRC Rule 510 Annual Reporting filing. Any such calculations will be based on reasonable assumptions as to future Generating Facility operations, differences between a replacement contract and this PPA, and similar considerations. The EPE Termination Payment does not include consequential incidental, punitive, exemplary, indirect, or business interruption damages.

"***ESA***" means the Energy Storage Agreement, dated as of the date hereof, by and between Seller Storage Affiliate and EPE relating to the Energy Storage Facility, including the Exhibits and Schedules attached thereto, as the same may be amended from time to time in accordance with the provisions thereof.

"***Event of Default***" means a Seller Event of Default as set forth in Section 13.1 or an EPE Event of Default as set forth in Section 13.2.

"***Execution Date***" has the meaning set forth in the introductory paragraph of this PPA.

"***Existing Santa Teresa PPA***" means that certain Power Purchase Agreement, dated as of October 8, 2019, by and between Seller (formerly named Hecate Energy Santa Teresa LLC) and EPE, as amended by that Amendment No. 1 to Power Purchase Agreement dated October 3, 2022.

"***Existing Santa Teresa 2 PPA***" means that certain Power Purchase Agreement, dated as of March 18, 2020, by and between Hecate Energy Santa Teresa 2 LLC and EPE, as amended by that Amendment No. 1 to Power Purchase Agreement dated October 3, 2022.

"***Expected Commercial Operation Date***" has the meaning set forth in Section 3.1.

"***Expected Generation***" has the meaning set forth in Exhibit I.

"***Fair Market Value***" has the meaning set forth in Section 12.2.1.

"***Federal Power Act***" means the Federal Power Act, as amended, 16 U.S.C. § 791a *et seq*.

"***FERC***" means the Federal Energy Regulatory Commission or any successor agency.

"***Final Option Notice***" has the meaning set forth in Section 12.3.1.

"***Force Majeure Event***" has the meaning set forth in Section 15.1.1.

"***GAAP***" has the meaning set forth in Section 25.17.

"***Generating Facility***" means Seller's solar generation facility, located in Doña Ana County, New Mexico, with an expected total solar power output of approximately One Hundred Fifty (150) MW which will produce the Energy Output made available to EPE under this PPA and which is commonly referred to as the Santa Teresa Solar Project, including one or more of Seller's Solar Units, and Seller's Interconnection Facilities, as further identified and described in Article 3 and Exhibit A to this PPA, including all of the following (and any additions, modifications, or replacements), the purpose of which is to produce electricity and deliver such electricity to the Electric Interconnection Point: Seller's equipment, buildings, all of the conversion and/or generation facilities, including the Solar Units, step-up transformers, output breakers, facilities necessary to connect to the Electric Interconnection Point, protective and associated equipment, improvements, and other tangible assets, contract rights, easements, rights of way, surface use agreements, and other interests or rights in real estate reasonably necessary for the construction, operation, and maintenance of the electric generating facilities that produce the Energy Output subject to this PPA.

"***Generating Facility Manager***" has the meaning set forth in Section 10.1.4.

"***Governmental Approval***" means any authorization, consent, permission, approval, license, ruling, permit, exemption, variance, order, judgment, instruction, condition, direction, directive, decree, declaration of, or regulation by any Governmental Authority relating to the construction, development, ownership, occupation, startup, testing, operation, or maintenance of the Generating Facility or to the execution, delivery, or performance of this PPA or the procurement pursuant to this PPA of renewable energy and Renewable Energy Certificates and shall also mean, where and as applicable and the context so dictates, any and all authorization, consent, permission, approval, license, ruling, permit, exemption, variance, order, judgment, instruction, condition, direction, directive, decree, declaration of, or regulation with regard to any Non-Governmental Compliance Obligations.

"***Governmental Authority***" means (a) any federal, state, local, or municipal governmental body; (b) any governmental, quasi-governmental, regulatory, or administrative agency, commission, body, or other authority exercising or entitled to exercise any administrative, executive, judicial, legislative, policy, regulatory, or taxing authority or power; or (c) any court or governmental tribunal.

"***Governmental Charges***" means any Taxes, charges or costs that are assessed or levied by any Governmental Authority or other Person, including local, state, or federal regulatory or taxing authorities that would affect the sale and purchase of Energy Output contemplated by this PPA, either directly or indirectly.

"***Government Officials***" has the meaning set forth in Section 23.4(d).

"***Grossed-Up PTC***" means (a) if the Generating Facility has qualified for the PTC and the Generating Facility is receiving the PTC (or not receiving the PTC as a result of a breach by EPE or EPE's Affiliate) in the applicable Commercial Operation Year, the positive value of (i) the PTC as adjusted to account for the PTC inflation adjustment factor most recently published by notice in the Federal Register that Seller is entitled to claim with respect to the sale of electricity produced by the Generating Facility at such time, plus (ii) the after-tax "gross up" amount that would be required to take into account the federal, state and local income tax to Seller or its direct or indirect owners on the amount set forth in clause (ii) hereof if such amount were taxable to Seller or its direct or indirect owners, and (b) if the Generating Facility has not qualified for the PTC or the Generating Facility is not receiving the PTC (other than as a result of a breach by EPE or EPE's Affiliate) in the Commercial Operation Year or the PTC year, as applicable, zero Dollars ($0) per MWh. The Grossed-Up PTC utilized for any given invoice will be determined in accordance with the previous sentence on the last Day of the Month covered by such invoice.

"***Guaranteed Solar Capacity***" has the meaning set forth in Section 3.1.

"***Hazardous Materials***" means any substance, material, gas, or particulate matter that is regulated by any local Governmental Authority, any applicable state, or the United States of America as an environmental pollutant or dangerous to public health, public welfare, or the natural environment including, without limitation, protection of non-human forms of life, land, water, groundwater, and air, including any material or substance that is (a) defined as "toxic," "polluting," "hazardous waste," "hazardous material," "hazardous substance," "extremely hazardous waste," "solid waste," or "restricted hazardous waste" under any provision of local, state, or federal law; (b) petroleum, including any fraction, derivative, or additive; (c) asbestos; (d) polychlorinated biphenyls; (e) radioactive material; (f) designated as a "hazardous substance" pursuant to the Clean Water Act, 33 U.S.C. § 1251 *et seq*.; (g) defined as a "hazardous waste" pursuant to the Resource Conservation and Recovery Act, 42 U.S.C. § 6901 *et seq*.; (h) defined as a "hazardous substance" pursuant to the Comprehensive Environmental Response, Compensation, and Liability Act, 42 U.S.C. § 9601 *et seq*.; (i) defined as a "chemical substance" under the Toxic Substances Control Act, 15 U.S.C. § 2601 *et seq*.; or (j) defined as a "pesticide" under the Federal Insecticide, Fungicide, and Rodenticide Act, 7 U.S.C. § 136 *et seq*.

"***House Energy***" has the meaning set forth in Section 1.4.

"***Import Restriction Action***" means any import-related or customs-related action by a Governmental Authority that directly or indirectly, delays, prevents, restricts, or limits the delivery of any equipment or merchandise procured by Seller to be used in or for the Generating Facility, including, without limitation, a U.S. Customs and Border Protection withhold release order, issuance of a CF28 or CF29 instrument, seizure or detention of merchandise to be or in the process of being imported, the prohibition from entry into a country of any goods, or any enforcement action.

"***Installed Solar Capacity***" means, as of a given point in time, the aggregate nameplate capacity of all Solar Units installed, commissioned, and operating at the Generating Facility, measured at the Point of Delivery.

"***Interconnection Agreements***" means the (i) the Standard Large Generator Interconnection Agreement, effective as of June 9, 2022, executed by Seller and the Transmission Provider; and (ii) the Standard Large Generator Interconnection Agreement, effective as of October 17, 2022, executed by Seller (as successor-in-interest to Hecate Energy Santa Teresa 2 LLC) and the Transmission Provider, for interconnection of the Generating Facility to the Transmission Provider's Transmission System, as each such agreement may be amended from time to time.

"***Interconnection Delay***" has the meaning set forth in Section 3.6.1(b).

"***Interconnection Facilities***" means the Transmission Provider's Interconnection Facilities and Seller's Interconnection Facilities.

"***Issuer Minimum Requirements***" has the meaning set forth in Section 20.2.1(b).

"***ITC(s)***" means the investment tax credits established pursuant to Sections 48 or 48E of the Code, or any successor Code section.

"***J.P. Morgan***" has the meaning set forth in Section 24.2.2.

"***kW***" means one or more kilowatts AC of electricity, as the context requires.

"***kWh***" means kilowatt hour AC.

"***Lender(s)***" means any and all Persons (including any trustee or agent acting on behalf of such Person), including Affiliates of Seller, (a) lending money or extending credit (including any financing lease, monetization of Tax Benefits, back-leverage or pay-go financing, Tax Equity Financing, or credit derivative arrangement) to Seller or to an Affiliate of Seller: (i) in connection with the development, construction, ownership, operation or maintenance of the Generating Facility; (ii) for working capital or other ordinary business requirements of the Generating Facility (including the maintenance, repair, replacement, or improvement of the Generating Facility); (iii) for any development financing, bridge financing, credit support, credit enhancement, or interest rate protection in connection with the Generating Facility; (iv) for any capital improvement or replacement related to the Generating Facility; or (v) for the purchase of the Generating Facility and the related rights from Seller; (b) participating as a Tax Equity Investor in the Generating Facility; (c) purchasing tax credits arising from or in connection with the Generating Facility; (d) any lessor under a lease finance arrangement relating to the Generating Facility; or (e) any hedge provider (including any energy price hedge provider).

"***Letter of Credit***" means an irrevocable, unconditional, transferable standby letter of credit for the benefit of the receiving Party, issued by an entity meeting the Issuer Minimum Requirements.

"***Licensed Professional Engineer***" means an independent, professional engineer reasonably acceptable to EPE, licensed in the State of New Mexico, and otherwise qualified to perform the work required by this PPA.

"***Local Provider***" has the meaning set forth in Section 1.4.

"***Losses***" has the meaning set forth in Section 21.1.1.

"***Major Equipment***" means the photovoltaic modules, tracking devices, transformers and inverters associated with, or incorporated into, the Generating Facility.

"***Metered Output***" means the Energy (in MWh) produced by the Generating Facility and delivered to either (i) EPE at the Point of Delivery, net of AC losses, measured at the Electric Metering Device at the Electric Interconnection Point, or (ii) to the Solar Charging Point for subsequent delivery to EPE pursuant to the ESA, as measured by the Electric Metering Device at the Solar Charging Point.

"***Minimum Performance Volume***" has the meaning set forth in Exhibit I.

"***Month***" means a calendar month.

"***Monthly Billing Period***" means the period during any particular Month in which Energy Output has been generated by Seller for EPE and delivered to either (i) the Point of Delivery for sale to EPE or (ii) the Solar Charging Point, in either case whether or not occurring prior to or subsequent to the Commercial Operation Date.

"***Moody's***" means Moody's Investor Services, Inc. and any successor thereto.

"***Mountain Prevailing Time***" or "***MPT***" means the time in effect in the Mountain Time Zone of the United States of America, whether Mountain Standard Time or Mountain Daylight Saving Time.

"***MW***" means megawatt or one thousand (1,000) kW AC.

"***MWh***" means megawatt hours AC.

"***NERC***" means the North American Electric Reliability Corporation or any successor organization.

"***NMPRC***" means the New Mexico Public Regulation Commission or any successor agency.

"***NMPTC***" means any state or local production tax credit or investment tax credit determined by reference to renewable electric energy produced from renewable energy resources in effect in the state of New Mexico.

"***NMPTC Statute***" means New Mexico statute 7-2-18.18 NMSA 1978.

"***Non-Defaulting Party***" means the Party other than the Defaulting Party with respect to an Event of Default that has occurred under Article 13.

"***Non-Governmental Compliance Obligations***" means all necessary filings, applications, accreditations, registrations, and/or other requirements including deposits, fees, accounts, and/or other obligations with WREGIS, NERC, WECC, and all other applicable agencies, self-regulatory organizations, and industry committees to which the Party is required to have membership and/or submit to jurisdiction in the performance of this PPA.

"***OATT***" means Open Access Transmission Tariff.

"***Operating Parameters***" has the meaning set forth in Section 10.4.1.

"***Operating Procedures***" means those procedures developed pursuant to Section 10.5.

"***Operating Records***" means the final version of all operating logs, blueprints for construction, operating manuals, warranties on equipment, and other documents related to the manufacture and installation of the generating equipment and generator step-up transformer, material engineering drawings, and environmental permits, plans, and studies, whether in printed or electronic format, that Seller uses or maintains for the operation of the Generating Facility.

"***Option***" has the meaning set forth in Section 12.1.

"***Outage Notice***" has the meaning set forth in Section 7.5.1.

"***Outside Commercial Operation Date***" has the meaning set forth in Section 3.1.

"***Party***" or "***Parties***" has the meaning set forth in the introductory paragraph of this PPA and includes any permitted assignee of a Party.

"***Performance Damages***" has the meaning set forth in Exhibit I.

"***Performance Guarantee***" has the meaning set forth in Section 10.9.

"***Performance Measurement Period***" means each sequential period of two (2) consecutive Commercial Operation Years, commencing with the first Performance Measurement Period which includes only Commercial Operation Year 1 and Commercial Operation Year 2. For the avoidance of doubt, the next occurring Performance Measurement Period following the first Performance Measurement Period described in the preceding sentence will include only Commercial Operation Year 3 and Commercial Operation Year 4.

"***Performance Measurement Report***" has the meaning set forth in Exhibit I.

"***Permitted Transferee***" means any Person that (a) is a Lender or assignee or transferee of such Lender that is itself a Person that satisfies the requirements of clause (b)(i) of this definition, or retains another Person to operate the Generating Facility and that Person satisfies the requirements of clause (b)(i) of this definition, or (b) (i) individually or together with its Affiliates owns or operates, or has retained a Person to operate the Generating Facility that owns, manages or operates, electric generating assets with an aggregate nameplate capacity of at least Two Hundred Fifty (250) MW and (ii) individually or together with its Affiliates has a consolidated net worth of at least One Hundred Million Dollars ($100,000,000).

"***Person***" means any natural person, corporation, limited liability company, general partnership, limited partnership, proprietorship, other business organization, trust, union, association, or Governmental Authority.

"***Point of Delivery***" means the electric system point at which Seller makes available to EPE the Energy Output being provided by Seller to EPE under this PPA. The Point of Delivery shall be specified in Section 3.1 and Exhibit B.

"***PPA***" means this Solar Power Purchase Agreement between Seller and EPE, including the Exhibits and Schedules attached hereto, as the same may be amended from time to time in accordance with the provisions hereof.

"***Preliminary Option Notice***" has the meaning set forth in Section 12.1.

"***Prudent Utility Practice(s)***" means the practices, methods, and acts (including the practices, methods, and acts engaged in or approved by a significant portion of the solar power generation industry serving public utilities, WECC and/or NERC) that, at a particular time, in the exercise of reasonable judgment in light of the facts known or that should reasonably have been known at the time a decision was made, would have been expected to accomplish the desired result in a manner consistent with law, regulation, permits, codes, standards, reliability, safety, environmental protection, economy, and expedition. With respect to the Generating Facility, Prudent Utility Practice(s) includes taking reasonable steps to ensure that:

(a) equipment, materials, resources, and supplies, including spare parts inventories, are available to meet the Generating Facility's needs;

(b) sufficient operating personnel are available at all times and are adequately experienced and trained and licensed as necessary to operate the Generating Facility properly, efficiently, and in coordination with EPE and are capable of responding to reasonably foreseeable Emergency Conditions whether caused by events on or off the Site;

(c) preventive, routine, and non-routine maintenance and repairs are performed on a basis that ensures reliable, long-term and safe operation, and are performed by knowledgeable, trained, and experienced personnel utilizing proper equipment and tools;

(d) appropriate monitoring and testing are performed to ensure equipment is functioning as designed;

(e) equipment is not operated in a reckless manner, or in a manner unsafe to workers, the general public, or the interconnected system or contrary to environmental laws, permits or regulations or without regard to defined limitations, such as flood conditions, safety inspection requirements, operating voltage, current, volt-ampere reactive ("***VAr***") loading, frequency, rotational speed, polarity, synchronization, and/or control system limits;

(f) equipment and components meet or exceed the standard of durability that is generally used for similar solar power generation facilities serving public utilities in the region and will function properly over the full range of ambient temperature and weather conditions reasonably expected to occur at the Site and under both normal and Emergency Conditions; and

(g) equipment, components, and processes are appropriately permitted with any local, state, or federal Governmental Authority and are operated and maintained in accordance with applicable permit and regulatory requirements.

"***PTC(s)***" means the production tax credits under Sections 45 or 45Y of the Code, or any successor Code section.

"***Qualified Operator***" is (a) a Person that has at least three (3) years' experience with operating at least Two Hundred Fifty (250) MW, in the aggregate, of solar generation to the extent reasonably available in the market, or (b) any other Person reasonably acceptable to EPE.

"***Receiving Party***" has the meaning set forth in Section 24.1(a).

"***Receiving Party Representatives***" has the meaning set forth in Section 24.2.2.

"***Recording***" has the meaning set forth in Section 25.18.

"***Reliability Coordinator***" means the entity that fulfills the duties of the Reliability Coordinator, as defined by NERC and as delegated by WECC, for its Reliability Coordinator Area in the Western Interconnection. As of the Execution Date, Southwest Power Pool is the Reliability Coordinator.

"***Reliability Coordinator Area***" means the collection of generation, transmission, and loads within the boundaries of the Reliability Coordinator.

"***Reliability Curtailment***" means any curtailment of the Generating Facility due to any of the following reasons: (a) the Transmission Provider and/or BAA direct a curtailment, reduction or redispatch of generation in the area to address an existing or anticipated Emergency Condition, even if such curtailment or redispatch operating instruction is carried out by the BAA, (b) the BAA curtails or otherwise reduces the Metered Output in order to satisfy NERC/WECC operating policies and criteria relating to compliance obligations of the EPE Balancing Area and/or EPE Transmission Provider system to operate within system limitations or other operating criteria as directed by the Reliability Coordinator, and (c) for safety or equipment failure situations which have an imminent and material risk to life or property. For the avoidance of doubt, a Reliability Curtailment does not include curtailments associated with an oversupply of generation on EPE or the Transmission Provider's Transmission System during a period of time when generating facilities connected to the Transmission Provider's Transmission System are interrupted or reduced to maintain the reliability of the Transmission Provider's Transmission System. EPE, upon reasonable notice will provide reasonable documentation relating to any Reliability Curtailments pursuant to this definition.

"***Renewable Energy Certificate***" or "***REC***" means a document evidencing that the amount of renewable energy shown on the document has been generated from the Generating Facility and

certified as such by WREGIS. For purposes of this PPA and registration with WREGIS, RECs are accumulated on a MWh basis with one (1) REC for each MWh of renewable energy generated. RECs include all Environmental Attributes associated with the generated energy. "RECs" excludes (i) any Tax Benefits, and (ii) any Energy, reliability or other power attributes from the Generating Facility.

"***Replacement Energy Costs***" means the actual costs incurred by EPE following a Seller Event of Default that are reasonable and necessary to replace Energy Output which Seller, in accordance with this PPA, would have generated at the Generating Facility and delivered to the Point of Delivery, but failed to so provide pursuant to this PPA. EPE shall not have to enter into a replacement contract to establish the Replacement Energy Costs. If EPE does not enter into a replacement contract, then the Replacement Energy Costs will be based on the market price for Energy, Environmental Attributes (including RECs), and Ancillary Services delivered to EPE's system, as reasonably agreed by EPE and Seller. In calculating such amounts, the Parties will comply with the requirements set forth in Section 13.4.1 in establishing the market price. Replacement Energy Costs for a Seller Event of Default shall also include EPE's reasonable outside attorneys' fees incurred in connection with entering into a replacement contract.

"***Replacement Energy Output***" has the meaning set forth in Exhibit I.

"***Replacement Volume***" has the meaning set forth in Exhibit I.

"***Return Amount***" has the meaning set forth in Section 12.1.

"***S&P***" means Standard & Poor's Corporation and any successor thereto.

"***Scheduled Maintenance Outage***" means a time during which a Solar Unit is shut down or its output is reduced to undergo scheduled maintenance in accordance with this PPA, or as otherwise agreed by Seller and EPE.

"***SEC***" has the meaning set forth in Section 25.17.

"***Security***" means Development Security or Delivery Term Security, as applicable.

"***Seller***" has the meaning set forth in the introductory paragraph of this PPA.

"***Seller Compliance Costs***" has the meaning set forth in Section 22.2.1.

"***Seller Excused Hours***" means those hours during which Seller is unable to schedule or deliver Energy to EPE, as a result of: (a) a Scheduled Maintenance Outage, (b) a Transmission Provider Curtailment, (c) a Reliability Curtailment, (d) an EPE Curtailment, (e) a Force Majeure Event, (f) any failure by EPE to perform a material obligation under this PPA (other than due to a breach by Seller of its obligations under this PPA), (g) Seller Forced Outage, or (h) failure of any Major Equipment.

"***Seller Forced Outage***" means an unplanned reduction, interruption or suspension of all or a portion of Energy deliveries from the Generating Facility to the Point of Delivery in an amount of at least five (5) MW not associated with Seller Excused Hours.

"***Seller Guarantor***" means either (a) D. E. Shaw Renewable Investments, L.L.C., a Delaware limited liability company or (b) any other Person (i) having a credit rating on such Person's long-term senior unsecured debt that is "Baa3" or higher by Moody's or "BBB-" or higher by S&P or insurance rating AM Best A- or better or (ii) reasonably acceptable to EPE.

"***Seller Guaranty***" means a guaranty in substantially the form attached as Exhibit J.

"***Seller Permitted Transfer***" means any of the following: (a) a Change of Control of Seller; (b) the direct or indirect transfer of shares of, or equity interests or other ownership interests in, Seller or a direct or indirect parent thereof to a Lender (or the subsequent transfer, assignment, or acquisition of such interest) in connection with any Tax Equity Financing; (c) a transfer of: (i) all or substantially all of the assets of Seller's Ultimate Parent in a single transaction; or (ii) all or substantially all of Seller's Ultimate Parent's solar generation portfolio in a single transaction; (d) in connection with a Lender's exercise of remedies under its financing agreements for the Generating Facility, the direct or indirect transfer of shares of, or equity interests or other ownership interests in, Seller (or the subsequent transfer, assignment, or acquisition of such interest, in each case including a Change of Control), or assignment of this PPA or any of Seller's rights or obligations under this PPA; or (e) any transfer or assignment to, or acquisition by, a Permitted Transferee of shares of, or equity interests or other ownership interests in, Seller; provided that, in the case of each of clauses (a) and (d) of this definition, following such transfer (A) the entity that operates the Generating Facility is a Qualified Operator or retains, prior to the date of such transfer, a Qualified Operator to operate the Generating Facility (or otherwise agrees not to interfere with the existing Qualified Operator for the Generating Facility), and (B) Seller continues to comply with the obligations to provide Development Security or Delivery Term Security, as applicable, in accordance with Article 20.

"***Seller Storage Affiliate***" means Santa Teresa Storage, LLC, a Delaware limited liability company.

"***Seller Termination Payment***" means the sum of (a) the aggregate of all amounts then owed from EPE to Seller, less any amounts owed from Seller to EPE, plus (b) the positive difference, if any, between (i) the Contract Value, and (ii) the net present value of the payments that can reasonably be expected to be applicable in the market under a replacement contract covering the same products (i.e., Energy Output), plus (c) Seller's reasonable transactional costs of entering into a new supply or sales arrangement all using a discount factor equal to the latest weighted average cost of capital as reported in the then-most recent NMPRC Rule 510 Annual Reporting filing. Any such calculations will be based on reasonable assumptions as to future Generating Facility operations, differences between a replacement contract and this PPA and

similar considerations. The Seller Termination Payment does not include consequential, incidental, punitive, exemplary or indirect or business interruption damages.

"***Seller's Financial Statements***" has the meaning set forth in Section 25.17(b).

"***Seller's Interconnection Facilities***" means "Interconnection Customer's Interconnection Facilities" as defined in the Interconnection Agreements. Seller's Interconnection Facilities are conceptually depicted in Exhibit B.

"***Shared Facilities Agreement***" means that certain agreement among Seller and Seller Storage Affiliate as expressly contemplated under the terms of the Interconnection Agreements.

"***Site***" means the parcel or parcels of real property on which the Generating Facility will be constructed and located, including any easements, rights of way, surface use agreements, and other interests or rights in real estate reasonably necessary for the construction, operation, and maintenance of the Generating Facility. The Site for the Generating Facility is more specifically described in Section 3.3 and Exhibit C. For the avoidance of doubt, this PPA is Site specific.

"***Solar Capacity Delay Damages***" has the meaning set forth in Section 3.7.

"***Solar Capacity Shortfall Damages***" has the meaning set forth in Section 3.8.

"***Solar Charging Point***" means the electric system points at which the Generating Facility delivers Energy Output to the Energy Storage Facility for purposes of charging the Energy Storage Facility in accordance with the terms of the ESA.

"***Solar Energy Output Payment Rate***" means the price to be paid by EPE to Seller for the Energy Output, as set forth in this PPA, which such price is inclusive of all Taxes except as provided in Section 9.7.

"***Solar Energy Payment***" has the meaning set forth in Section 8.1(a).

"***Solar Excused Output***" has the meaning set forth in Exhibit I.

"***Solar Unit(s)***" means the photovoltaic arrays, tracking devices, inverters, transformers, and other equipment necessary for the Generating Facility to collect sunlight at the Site and convert it into electricity. One Solar Unit includes all equipment associated with each inverter.

"***Supply Chain Event***" means any delay in Seller's performance of its obligations hereunder arising out of any Import Restriction Action applicable to the equipment or merchandise procured by Seller (or arranged for procurement by Seller) to be used in or for the Generating Facility and that arises after Seller has procured or arranged for the procurement of such equipment or merchandise to be used in or for the Generating Facility.

"***System Control Center***" or "***SCC***" means EPE's representative(s) responsible for dispatch of generating units, including the Solar Units.

"***Tax Benefits***" means (a) federal and state investment and/or production tax credits (including ITCs and PTCs but excluding NMPTCs), and any other tax credits which are or will be generated with respect to the ownership or operation of any portion of the Generating Facility, (b) any cash payments or outright grants of money provided by a Governmental Authority or non-Governmental Authority in lieu of such tax credits, and (c) depreciation deductions and depreciation benefits, and any other tax benefits arising from the ownership or operation of any portion of the Generating Facility.

"***Tax Equity Financing***" means, with respect to Seller or an upstream equity owner of Seller, any transaction or series of transactions (including, without limitation, any transaction of the type described in this definition that utilizes a lease or inverted lease structure) resulting in a portion of the membership interests in Seller or an upstream equity owner, as applicable, being issued or otherwise provided to another Person (a "***Tax Equity Investor***") in exchange for capital contributions or other forms of payment to Seller or such upstream equity owner, as applicable, or the Generating Facility being sold to and leased by Seller from a Tax Equity Investor, in either case for the purpose of raising a portion of the funds needed to finance the Generating Facility by monetizing the Tax Benefits associated with the Generating Facility.

"***Tax Equity Investor***" has the meaning set forth in the definition of Tax Equity Financing.

"***Taxes***" means all taxes, fees, levies, licenses, or charges imposed by any Governmental Authority, other than taxes, levies, licenses, or charges based upon net income or net worth as set forth in more detail in Section 9.7.

"***Term***" has the meaning set forth in Article 2.

"***Termination Payment***" means the EPE Termination Payment or the Seller Termination Payment, as applicable.

"***Test Energy***" means any and all Energy Output generated by the Generating Facility and delivered to the Point of Delivery or the Solar Charging Point, as applicable, during the Test Period other than Energy Output generated by an Early Block after all commissioning testing is accepted by EPE in its reasonable discretion for said Early Block.

"***Test Period***" means the period commencing on the Day the Generating Facility is energized, operates in parallel with the Transmission Provider's Transmission System, and is capable of delivering Metered Output to the Point of Delivery and the Solar Charging Point, and ending on the Commercial Operation Date.

"***Transmission Provider***" means EPE, EPE's designated agent, or a third party acting in its capacity owning, controlling, or operating facilities used for the transmission of electric energy in interstate commerce and providing transmission service under the OATT and any successor entity, if applicable.

"***Transmission Provider Curtailment***" means curtailments of Energy from the Generating Facility directed by the Transmission Provider in accordance with Transmission Provider's OATT and the Interconnection Agreements, and consistent with the Shared Facilities Agreement, resulting from a Transmission Provider Reliability Curtailment or an Emergency Condition.

"***Transmission Provider Reliability Curtailment***" means any curtailment by the Transmission Provider in accordance with NERC/WECC operating policies and criteria and the OATT of Energy Output deliveries for reliability reasons, but not including any EPE Curtailment.

"***Transmission Provider's Interconnection Facilities***" means the facilities necessary to connect the Transmission Provider's Transmission System to the Electric Interconnection Point, including breakers, bus work, bus relays, and associated equipment installed by the Transmission Provider for the direct purpose of physically and electrically interconnecting the Generating Facility, along with any easements, rights of way, surface use agreements and other interests or rights in real estate reasonably necessary for the construction, operation and maintenance of such facilities. Arrangements for the installation and operation of the Transmission Provider's Interconnection Facilities shall be governed by the Interconnection Agreements.

"***Transmission Provider's Transmission System***" means the contiguously interconnected electric transmission facilities over which the Transmission Provider has rights to provide bulk transmission of capacity and energy from the Electric Interconnection Point.

"***Ultimate Parent***" means DESRI Holdings, L.P., a Delaware limited partnership.

"***Weather Station(s)***" has the meaning set forth in Section 10.8.1.

"***WECC***" means the Western Electricity Coordinating Council, a NERC regional electric reliability council, or any successor organization.

"***Western Interconnection***" means the synchronously operated electric transmission grid located in the western part of North America, including parts of Montana, Nebraska, New Mexico, South Dakota, Texas, Wyoming and Mexico and all of Arizona, California, Colorado, Idaho, Nevada, Oregon, Utah, Washington and the Canadian Provinces of British Columbia and Alberta.

"***WREGIS***" means the Western Renewable Energy Generation Information System or any successor system.

"***WREGIS Certificates***" has the same meaning as "Certificate" as defined by WREGIS in the WREGIS Operating Rules.

"***WREGIS Operating Rules***" means the rules that describe the operations of WREGIS, as may be amended, which are currently available at www.wregis.org.

1.2 Rules of Construction

1.2.1 The masculine shall include the feminine and neuter.

1.2.2 References to "Articles," "Sections," "Exhibits" or "Schedules" shall be to articles, sections, exhibits, or schedules of this PPA unless otherwise stated.

1.2.3 The Exhibits and Schedules attached hereto are incorporated in and are intended to be a part of this PPA; *provided,* that, in the event of a conflict between the terms of any Exhibit or Schedule and the terms of this PPA, the terms of this PPA shall take precedence.

1.2.4 This PPA was negotiated and prepared by both Parties with the advice and participation of counsel. The Parties have agreed to the wording of this PPA and none of the provisions hereof shall be construed against one Party on the ground that such Party is the author of this PPA or any part hereof.

1.2.5 The Parties shall act reasonably and in accordance with the principles of good faith and fair dealing in the performance of this PPA. Unless expressly provided otherwise in this PPA, (i) where this PPA requires the consent, approval, acceptance, agreement or similar action by a Party, such consent, approval, acceptance, agreement or similar action shall not be unreasonably withheld, conditioned or delayed, and (ii) wherever this PPA gives a Party a right to determine, require, specify or take similar action with respect to a matter, such determination, requirement, specification or similar action shall be reasonable.

1.2.6 Use of the words "include" or "including" or similar words shall be interpreted as "including but not limited to" or "including, without limitation."

1.2.7 Use of the words "tax" or "taxes" shall be interpreted to include taxes, fees, surcharges, and the like.

1.3 Interpretation with Interconnection Agreements

1.3.1 Each Party conducts its operations in a manner intended to comply with FERC Standards of Conduct for Transmission Providers, requiring the separation of its transmission and merchant functions, as applicable.

1.3.2 The Parties acknowledge and agree that the Interconnection Agreements and the Shared Facilities Agreement shall be separate and free-standing contracts and that the terms of this PPA are not binding upon the Transmission Provider.

1.3.3 Notwithstanding any other provision in this PPA, nothing in the Interconnection Agreements or the Shared Facilities Agreement shall alter or modify Seller's or EPE's rights, duties and obligations under this PPA. This PPA shall not be construed to create any rights between Seller and the Transmission Provider.

1.3.4 Seller expressly recognizes that, for purposes of this PPA, the Transmission Provider shall be deemed to be a separate entity and separate contracting party.

1.4 Interpretation of Arrangements for Electric Supply to the Generating Facility

1.4.1 This PPA does not provide for the supply of retail electric power to the Generating Facility, for any purpose ("***House Energy***"). Seller, in its sole discretion, may (a) contract with the local utility in whose retail service territory the Generating Facility is located ("***Local Provider***") for the supply of House Energy, (b) consume energy concurrently generated by the Generating Facility for House Energy, and / or (c) co-locate additional facilities designed to supply House Energy; *provided*, *however*, *that* excess energy produced from such co-located additional facility shall not be delivered by Seller to EPE under this PPA.

1.4.2 Seller's arrangements for the supply of House Energy to the Generating Facility shall be separate and free-standing arrangements. The terms of this PPA are not binding upon the Local Provider. For purposes of this PPA, the Local Provider shall be deemed to be a separate entity and separate contracting party, whether or not the Local Provider is EPE, an Affiliate of EPE, or a third party entity.

1.4.3 Notwithstanding any other provision in this PPA, nothing in Seller's arrangements for the supply of House Energy to the Generating Facility shall alter or modify Seller's or EPE's rights, duties and obligations under this PPA. This PPA shall not be construed to create any rights between Seller and EPE in EPE's capacity as the Local Provider.

1.4.4 House Energy shall be real time measured by either (i) separate Electric Metering Devices for Metered Output and House Energy or (ii) a single Electric Metering Device that separately measures Metered Output and House Energy. Each meter will have bi-directional kWh pulse accumulators and will be recorded separately for delivered and received power.

ARTICLE 2 TERM

This PPA shall become effective on the Execution Date, subject to conditions precedent set forth herein, and shall end at 11:59 p.m. MPT on the date that is the last Day of the twentieth (20th) Commercial Operation Year, subject to the early termination provisions set forth herein (collectively, the "***Term***"). Applicable provisions of this PPA shall continue in effect after termination, including early termination, to the extent necessary to enforce or complete the duties, obligations or responsibilities of the Parties arising prior to termination.

ARTICLE 3 GENERATING FACILITY DESCRIPTION

3.1 Commercial Terms

The following commercial terms apply to the transaction contemplated by this PPA, each term is as more fully set forth in this PPA:

COMMERCIAL TERMS

Point of Delivery:	The point on Transmission Provider's Transmission System where Seller makes available to EPE the Energy Output being provided by Seller to EPE under this PPA, as further described in Exhibit B.
Solar Energy Output Payment Rate:	\$28.95 per MWh_{AC}
Guaranteed Solar Capacity:	150 MW_{AC}, as may be adjusted in accordance with Section 3.8.
Day(s) of Week:	Monday through Sunday, including NERC holidays.
Hours:	Hour Ending 0100 - Hour Ending 2400, Monday through Sunday MPT.
Expected Commercial Operation Date:	June 30, 2026, subject to extensions as set forth in Section 3.6.
Outside Commercial Operation Date:	One hundred eighty (180) Days after the Expected Commercial Operation Date.

3.2 Generating Facility

Exhibit A provides a detailed description of the Generating Facility, including identification of the major equipment and components that will make up the Generating Facility. Seller shall provide advance written notice to EPE at the earliest practicable time of any proposed material changes in the Generating Facility.

3.3 Location

A scaled map that identifies the Site, the location of the Electric Interconnection Point, the location of the Point of Delivery, and the location of the Interconnection Facilities is included in Exhibit A. Exhibit A also contains a preliminary indication of the location of the Solar Units at the

Site. Seller will provide notice to EPE of the final proposed location of the Solar Units at the Site no later than thirty (30) Days prior to initial Site construction mobilization and commencement of civil infrastructure work by Seller's contractors at the Site. On or before the Commercial Operation Date, Seller may provide to EPE a revised Exhibit A removing unused and unnecessary portions of land that were previously included within the Site, if any. Seller shall provide advance written notice to EPE at the earliest practicable time of any other proposed location changes.

3.4 General Design of the Generating Facility

Seller shall construct the Generating Facility in accordance with Prudent Utility Practices and in accordance with the terms and conditions of the Interconnection Agreements and the Shared Facilities Agreement. Seller shall maintain the Generating Facility according to Prudent Utility Practice(s), the Interconnection Agreements, and the Shared Facilities Agreement. The Generating Facility shall at all times:

(a) Have the required panel space and 125V $_{DC}$ battery-supplied voltage to accommodate metering, generator telemetering equipment, and communications equipment;

(b) be equipped for and capable of AGC by EPE;

(c) use communication circuits from the Generating Facility to the System Control Center for the purpose of telemetering, supervisory control/data acquisition, and voice and other communications as required for AGC by EPE;

(d) supply Energy with minimal harmonic distortion in compliance with the requirements of the Interconnection Agreements, Shared Facilities Agreement, and Prudent Utility Practices;

(e) deliver Energy to the Point of Delivery, at the frequency specified by EPE;

(f) be capable of being remotely started and stopped in response to a signal from the System Control Center; and

(g) be capable of immediate disconnection from EPE's system in the event of an Emergency Condition.

3.5 Expected Commercial Operation Date

Subject to the extensions as specifically set forth herein, the Commercial Operation Date shall occur no later than the Expected Commercial Operation Date.

3.6 Extension

3.6.1 The Expected Commercial Operation Date and related delay damages provisions under Section 3.7 shall be extended by a number of Days, on a day-for-day basis up to:

(a) a maximum of one hundred eighty (180) Days, equal to the duration of any Force Majeure Event; and, in addition to the extensions provided for in this clause (a),

(b) a maximum of one hundred eighty (180) Days, in the event of delay associated with the interconnection of the Generating Facility ("***Interconnection Delay***") (the aggregate of clause (a) above and this clause (b) being no more than three hundred sixty (360) days).

3.6.2 In no event shall the following delays be considered to be an Interconnection Delay pursuant to this PPA: any delays caused by Seller's exercise of Seller's rights pursuant to the Interconnection Agreements or the Shared Facilities Agreement, including (x) to suspend work under an Interconnection Agreement; or (y) to extend the Commercial Operation Date under the Interconnection Agreements beyond June 30, 2026 (except to the extent that such suspension or extension by Seller under an Interconnection Agreement is due to or arises as a result of a (i) Force Majeure Event or (ii) breach of an Interconnection Agreement or the Shared Facilities Agreement by the Transmission Provider).

3.6.3 Seller will provide written notice to EPE describing any such Force Majeure Event or Interconnection Delay within five (5) Business Days after becoming aware of such Force Majeure Event or Interconnection Delay. The number of Days of any such extension shall be calculated from the date on which the Force Majeure Event or Interconnection Delay begins and may be counted concurrently if the Force Majeure Event and the Interconnection Delay occur concurrently. If a Force Majeure Event or Interconnection Delay are claimed to delay the Commercial Operation Date for more than three hundred sixty (360) Days in the aggregate following the Expected Commercial Operation Date, then EPE shall have the right to terminate this PPA without further liability of either Party, and EPE shall return the Development Security less any amounts due from Seller to EPE.

3.7 Solar Capacity Delay Damages

If the Commercial Operation Date has not occurred by the Expected Commercial Operation Date, except as a result of a Force Majeure Event or Interconnection Delay, Seller will use commercially reasonable efforts to continue construction of the Generating Facility and shall pay liquidated damages to EPE in an amount equal to the product of (a) the Damage Rate multiplied by (b) each MW of Delayed Solar Capacity ("***Solar Capacity Delay Damages***") for each Day after the Expected Commercial Operation Date until the earlier of (i) the Commercial Operation Date, (ii) the Outside Commercial Operation Date, and (iii) the date this PPA is terminated in accordance with its terms. In no event shall the aggregate Solar Capacity Delay Damages paid pursuant to this Section 3.7 and Exhibit L exceed the amount of the Development Security. In the event that the

Generating Facility fails to achieve Commercial Operation by the Outside Commercial Operation Date, except as a result of a Force Majeure Event or Interconnection Delay, EPE may, at its sole option, terminate this PPA upon written notice to Seller pursuant to Section 13.1.1(f), in which case Seller's liability will be as set forth in Article 13.

3.8 Solar Capacity Shortfall Damages

If the Commercial Operation Date is declared before the full Guaranteed Solar Capacity has been constructed, commissioned, and tested, Seller shall use commercially reasonable efforts to cause the remaining portion of the Guaranteed Solar Capacity to achieve Commercial Operation. If Seller has not caused all Delayed Solar Capacity to achieve Commercial Operation on or before the date that is one hundred eighty (180) Days after the Commercial Operation Date, then no later than two hundred (200) Days after the Commercial Operation Date, Seller shall pay to EPE liquidated damages in the amount of Five Hundred Thousand Dollars ($500,000) per MW of Delayed Solar Capacity (as of the Outside Commercial Operation Date) ("***Solar Capacity Shortfall Damages***"), in which case the Guaranteed Solar Capacity will be reduced in an amount equal to the Delayed Solar Capacity for which Solar Capacity Shortfall Damages were timely paid pursuant to this Section 3.8.

3.9 Test Energy and Early Blocks

Not less than thirty (30) Days prior to the date upon which Seller expects to begin delivering Test Energy, Seller shall give written notice to EPE of such expected deliveries. During the Test Period, EPE agrees to accept and purchase all Test Energy generated by the Generating Facility and delivered to the Point of Delivery or the Solar Charging Point, as applicable, at a rate equal to the five-minute, real-time average price of energy as determined at the Palo Verde Trading Hub during the time in question for all Test Energy delivered to the Point of Delivery. Seller shall notify EPE, to the extent practicable, fifteen (15) Days prior to the initial delivery of Test Energy. Notwithstanding the prior sentence, prior to declaring the Commercial Operation Date for the Generating Facility, but no earlier than March 1, 2026, Seller may, from time to time, commence delivery of Energy Output on a sustained basis from Solar Units with an aggregate capacity of at least ten (10) MW (each an "***Early Block***"), after all commissioning testing is accepted by EPE in its reasonable discretion for said Early Block. EPE will pay for Energy Output generated from Early Blocks at a rate equal to the Solar Energy Output Payment Rate; *provided*, that Deemed Delivered Energy resulting from an EPE Curtailment shall not apply.

3.10 Notice of Commercial Operation

Not less than thirty (30) Days prior to the date upon which Seller expects to achieve the Commercial Operation Date, Seller shall give written notice to EPE of such expected Commercial Operation Date. EPE shall provide written notice to Seller either accepting or rejecting Seller's notice of such expected Commercial Operation Date and, if EPE rejects such notice, EPE shall specify in such notice what defects to the achievement of the Commercial Operation Date exist to

support its rejection of such notice. Following any such rejection by EPE, Seller shall promptly correct any such defects and shall either redeliver such notice to EPE or initiate dispute resolution in accordance with Section 9.5 in response to EPE's rejection. If dispute resolution is initiated pursuant to this Section 3.10, the Commercial Operation Date shall be determined in accordance with such dispute resolution process. If EPE accepts that Seller has fulfilled the requirements of Commercial Operation, the Commercial Operation Date shall be deemed to have occurred as of the date set forth in Seller's most recent notice delivered pursuant to this Section 3.10. In the event that Seller determines that the Expected Commercial Operation Date for the Generating Facility is not feasible or is impossible to achieve, Seller shall promptly notify EPE and shall advise EPE of the new proposed Commercial Operation Date; *provided*, *however*, that such new Commercial Operation Date shall not be later than the Outside Commercial Operation Date.

ARTICLE 4 AGC; EPE CURTAILMENT; RELIABILITY CURTAILMENT

4.1 AGC; EPE Curtailment and Reliability Curtailment

Prior to the Commercial Operation Date or, if applicable, prior to the Test Period, Seller, at its sole cost and expense, shall install AGC at the Generating Facility and shall maintain such AGC throughout the Delivery Term. Beginning on the Commercial Operation Date and in response to directives from the System Control Center, Seller shall curtail the Generating Facility by use of the AGC system to effect any EPE Curtailment pursuant to Section 4.1.1 or any Reliability Curtailment pursuant to Section 4.1.2. Seller shall ensure that, throughout the Delivery Term, the SCADA signal is capable of functioning within the margin of error specified in the control system manufacturer's energy set point margin of error. Seller shall ensure that the Generating Facility's AGC Remote/Local status is in "Remote" set-point control during normal operations.

4.1.1 Seller shall reduce Energy Output from the Generating Facility during and to the extent of any EPE Curtailment. An EPE Curtailment shall include, without limitation, any curtailment (a) requested by EPE for any discretionary or preferential reason, including curtailments with the intended purpose of achieving economic savings by not purchasing energy from the Generating Facility, (b) any curtailment resulting from EPE's bidding, scheduling, offering or other market activities, which includes the submission of output forecasts or schedules for less than the forecasted generation of the Generating Facility, (c) any curtailment of the Generating Facility resulting from the manner in which EPE dispatches, instructs or uses the Energy Storage Facility, and (d) which is a CAISO EIM Curtailment. Such EPE Curtailment rights do not provide EPE with any rights to direct the operation of the Generating Facility. For an EPE Curtailment, EPE shall pay Seller for Deemed Delivered Energy at the Deemed Delivered Energy Price in accordance with Section 8.1(a). For purposes of this Section 4.1.1, "***Deemed Delivered Energy***" shall mean the amount of Energy that was not delivered to the Point of Delivery by Seller but would have been so delivered but for an EPE Curtailment. Deemed Delivered Energy (MWh)

shall be reasonably calculated by Seller taking into account weather and pyranometer data from the meteorological station(s) at the Site for all or a portion of the Solar Units taken out of service due to an EPE Curtailment, but excluding any Solar Unit(s) taken out of service or operating at a reduced capacity for other reasons, and adjusted to account for electrical losses in delivering Energy to the Point of Delivery. EPE shall have the right to review and approve Seller's calculations of Deemed Delivered Energy, such approval not to be unreasonably withheld.

4.1.2 Seller shall reduce Energy Output from the Generating Facility during and to the extent of any Reliability Curtailment, Transmission Provider Curtailment, or EPE Curtailment. With the exception of an EPE Curtailment, EPE shall not be required to pay Seller for any curtailed Energy during any Reliability Curtailment or Transmission Provider Curtailment; provided, however, that Seller shall have the right to charge the Energy Storage Facility with any Energy Output that is generated by the Generating Facility but is subject to an EPE Curtailment, Reliability Curtailment, or Transmission Provider Curtailment.

ARTICLE 5 DELIVERY AND METERING

5.1 Delivery Arrangements

5.1.1 Energy Delivery. Seller shall secure transmission necessary to deliver Energy to the Point of Delivery. As between EPE and Seller under this PPA, Seller shall be responsible for the costs of interconnection and costs required to deliver the Energy Output from the Generating Facility to the Point of Delivery at the required voltage, including the costs of any associated network upgrades. As between EPE and Seller under this PPA, Seller shall also be responsible for all transmission charges, Ancillary Service charges, electrical losses and any other transfer-related charges applicable to Energy Output up to the Point of Delivery. EPE shall be responsible for costs required to deliver the Energy Output from and beyond the Point of Delivery. Except as otherwise provided in this Section 5.1, Seller shall not be responsible for costs and charges related to scheduling and imbalances.

5.1.2 Data Arrangements. On a Day-ahead basis and no later than 4:00 a.m. MPT, Seller, or Seller's agent, shall make available to EPE a 24-hour forecast of the Metered Output to be delivered to the Point of Delivery or the Solar Charging Point. In addition, Seller, or Seller's agent, shall establish and maintain (including any future technological improvements developed by Seller, or an agent of Seller) an interface with EPE via a web-based file transfer protocol for the purpose of transferring to EPE real-time forecasting data related to the Generating Facility (or any alternative transfer mechanism mutually agreed to by the Parties).

5.1.3 Auxiliary Loads. Seller shall be responsible for separately sourcing, metering and payment for an electrical power supply and associated power consumption for the Generating Facility auxiliary loads.

5.1.4 EPE Costs and Charges. EPE shall be responsible for all transmission charges, Ancillary Service charges, electrical losses, market, independent system operator or regional transmission organization costs, charges or penalties, including any imbalance penalties, and any other transfer-related charges and arrangements, including scheduling arrangements, required to deliver Metered Output from and beyond the Point of Delivery.

5.2 Availability Reporting

Seller shall be responsible for providing accurate and timely updates on the current availability of the Generating Facility to EPE's SCC.

5.3 Electric Metering Devices

5.3.1 Seller shall ensure that the Energy sold and delivered pursuant to this PPA shall be metered and accounted for separately from any electric generation facility that utilizes the same Electric Interconnection Point. Seller shall ensure that Electric Metering Devices are installed at or near the Electric Interconnection Point that measures the output of the Generating Facility before such Energy is commingled with the energy from any other Generating Facility.

5.3.2 The provisions of this Section 5.3 shall govern Electric Metering Devices except to the extent the Interconnection Agreements or Shared Facilities Agreement modify or otherwise conflict with these provisions, in which case, the terms of the Interconnection Agreements or Shared Facilities Agreement, as applicable, shall govern.

5.3.3 All Electric Metering Devices used to measure the Energy made available to EPE by Seller under this PPA and to monitor and coordinate operation of the Generating Facility shall be owned, installed, and maintained in accordance with the Interconnection Agreements and Shared Facilities Agreement at no cost to EPE under this PPA. The design of the Electric Metering Device system shall be subject to EPE approval prior to commencement of construction of the Generating Facility. If Electric Metering Devices are not installed at the Point of Delivery, meters or meter readings will be adjusted to reflect losses from the Electric Metering Devices to the Point of Delivery based initially on the amount specified by the manufacturer for expected losses, *provided*, that the Parties may revise this loss adjustment based on actual experience. Seller shall provide or arrange with the Transmission Provider to provide EPE reasonable access to all Electric Metering Devices for all purposes necessary to perform under this PPA and shall provide EPE the reasonable opportunity to be present at any time when such Electric Metering Devices are to be inspected and tested or adjusted. EPE shall also have the right to conduct, at its own cost and expense, its own tests of the Electric Metering Devices upon request within a reasonable timeframe. Seller shall provide EPE with all authorizations necessary to have access to the Electric Metering Devices, including obtaining any consent or other agreement from the Transmission Provider necessary to allow EPE such access. Energy shall be metered using solid state, high precision, digital display meters of ANSI 0.1 accuracy class or better, with the specific model approved by EPE in its reasonable discretion.

5.3.4 EPE may elect to install and maintain, at its own expense, backup metering devices ("***Back-Up Metering***") in addition to the Electric Metering Devices, which installation and maintenance shall be performed in a manner acceptable to the Parties. EPE, at its own expense, shall inspect and test Back-Up Metering upon installation and at least annually thereafter. EPE shall provide Seller with reasonable advance notice of, and permit a representative of Seller to witness and verify, such inspections and tests; *provided*, *however*, that Seller shall not unreasonably interfere with or disrupt such inspection and testing activities of EPE and shall comply with all applicable safety standards. Upon written request, EPE shall perform additional inspections or tests of Back-Up Metering and shall permit a qualified representative of Seller to inspect or witness the testing of Back-Up Metering; *provided*, *however*, that Seller shall not unreasonably interfere with or disrupt such inspection and testing activities of EPE and shall comply with all applicable safety standards. The actual expense of any such requested additional inspection or testing shall be borne by Seller, unless, upon such inspection or testing, Back-Up Metering is found to register inaccurately by more than the allowable limits established in this Article 5, in which event the expense of the requested additional inspection or testing shall be borne by EPE. If requested in writing, EPE shall provide copies of any inspection or testing reports to Seller.

5.3.5 If any Electric Metering Devices, or Back-Up Metering, are found to be defective or inaccurate outside the bounds of the selected device's manufacturer's performance standards, they shall be adjusted, repaired, replaced, and/or recalibrated as near as practicable to a condition of one half percent (0.5%) error by the Party owning such defective or inaccurate device and at that Party's expense.

5.4 Adjustment for Inaccurate Meters

If an Electric Metering Device, or Back-Up Metering, fails to register, or if the measurement made by an Electric Metering Device, or Back-Up Metering, is found upon testing to be inaccurate by more than one half percent (0.5%), an adjustment shall be made correcting all measurements by the inaccurate or defective Electric Metering Device, or Back-Up Metering, for both the amount of the inaccuracy and the period of the inaccuracy, in the following manner:

(a) In the event that the Electric Metering Device is found to be defective or inaccurate, the Parties shall use Back-Up Metering, if installed, to determine the amount of such inaccuracy; *provided*, *however*, that Back-Up Metering has been tested and maintained in accordance with the provisions of this Article 5. If Back-Up Metering is installed on the low side of Seller's step-up transformer, the Back-Up Metering data shall be adjusted for losses in the same manner as for the Electric Metering Devices. In the event that Back-Up Metering is not installed, or Back-Up Metering is also found to be inaccurate by more than one half percent (0.5%), the Parties shall estimate the amount of the necessary adjustment on the basis of deliveries of Metered Output from the Generating Facility to the Point of Delivery during periods of similar operating conditions when the Electric Metering

Device was registering accurately. The adjustment shall be made for the period during which inaccurate measurements were made.

(b) In the event that the Parties cannot agree on the actual period during which the inaccurate measurements were made, the period during which the measurements are to be adjusted shall be the shorter of (i) the last one-half of the period from the last previous test of the Electric Metering Device to the test that found the Electric Metering Device to be defective or inaccurate, or (ii) the one hundred eighty (180) Days immediately preceding the test that found the Electric Metering Device to be defective or inaccurate.

(c) To the extent that the adjustment period covers a period of deliveries for which payment has already been made by EPE, EPE shall use the corrected measurements as determined in accordance with this Article 5 to recompute the amount due for the period of the inaccuracy and shall subtract the previous payments by EPE for this period from such re-computed amount. If the difference is a positive number, the difference shall be paid by EPE to Seller; if the difference is a negative number, that difference shall be paid by Seller to EPE, or at the discretion of EPE, may take the form of an offset to payments due Seller by EPE. Payment of such difference by the owing Party shall be made not later than thirty (30) Days after the owing Party receives notice of the amount due.

ARTICLE 6 CONDITIONS PRECEDENT; ACKNOWLEDGMENT AND AGREEMENT

6.1 Conditions Precedent

The obligations of the Parties under this PPA are subject to satisfaction of the following conditions precedent; *provided*, that the obligations of the Parties under Article 2, Article 3 (except Sections 3.5 through 3.10), Article 13, Article 14, Article 15, Article 16, Article 17, Article 18, Article 19, Section 22.2, Article 24, and Article 25 (except Section 25.17) shall be effective commencing on the Execution Date:

(a) Receipt of approval of this PPA from the Boards of Directors of EPE and its parent company, unless otherwise agreed to by both Parties; and

(b) Execution and effectiveness of a mutually agreeable memorandum of agreement and mutual release of claims between the Parties with respect to the Existing Santa Teresa PPA and Existing Santa Teresa 2 PPA.

ARTICLE 7 SALE AND PURCHASE OF ENERGY OUTPUT

7.1 Sale and Purchase of Energy Output

In accordance with and subject to the terms and conditions of this PPA, including relating to Deemed Delivered Energy, commencing on the first Day of the Test Period and continuing

through the end of the Term ("***Delivery Term***"), Seller shall sell and deliver to EPE, and EPE shall purchase and receive from Seller, including all right, title and interest in and to the Energy Output made available by Seller at the Point of Delivery or the Solar Charging Point, as applicable, in accordance with Article 5; *provided*, *however*, that EPE shall not be required to receive and purchase Energy Output at the Point of Delivery when and to the extent that (a) Seller's performance is excused by a Force Majeure Event, (b) a Transmission Provider Curtailment is preventing delivery, (c) a Reliability Curtailment is preventing delivery, (d) a Seller Forced Outage is preventing Seller's performance, (e) an EPE Curtailment is continuing (*provided*, that EPE shall pay Seller for Deemed Delivered Energy at the Deemed Delivered Energy Price in accordance with Section 8.1(a) in the event of an EPE Curtailment), or (f) a Scheduled Maintenance Outage is continuing.

7.2 Title and Risk of Loss

As between Seller and EPE, Seller shall be deemed to be in control of the Energy Output from the Generating Facility up to delivery and receipt at the Point of Delivery and EPE shall be deemed to be in control of such Energy Output from and after delivery and receipt at the Point of Delivery. Title and risk of loss related to Energy Output shall transfer from Seller to EPE at the Point of Delivery. Seller shall retain title and risk of loss related to Energy Output delivered to the Solar Charging Point until such time as such quantities are delivered in accordance with this PPA.

7.3 Future Environmental Attributes

The Parties acknowledge and agree that (a) additional Environmental Attributes may be recognized by a Governmental Authority after the Execution Date; (b) in accordance with the terms of this PPA all right and title to such additional Environmental Attributes is included in the Solar Energy Output Payment Rate as Energy Output; and (c) such additional Environmental Attributes shall pass to EPE in accordance with Section 7.2. If in order for EPE to receive the benefit of any additional Environmental Attributes Seller must incur any third party costs not otherwise provided for in this PPA, such costs shall, if Seller incurs such costs at EPE's request, be reimbursed promptly to Seller by EPE in accordance with this Section 7.3. Seller shall deliver a good faith estimate of such additional costs to EPE prior to incurring such costs, and following receipt of such estimate, EPE shall notify Seller of (i) its continued election to have Seller incur such costs, and in such case EPE shall promptly reimburse Seller for such costs, or (ii) of its election to have Seller cease incurring the additional costs, in which case EPE acknowledges that it may not receive the benefits of such additional Environmental Attributes; *provided*, that if the additional costs exceed Seller's good faith estimate by more than ten percent (10%), EPE shall have the right to notify Seller to cease incurring the additional costs, in which case EPE acknowledges that it may not receive the benefits of such additional Environmental Attributes. For the avoidance of doubt, EPE shall remain liable to Seller for all costs incurred prior to Seller's receipt of EPE's notice. The Parties agree to negotiate in good faith further agreements and documentation necessary to effectuate the transfer of such additional Environmental Attributes.

7.4 Scheduling

7.4.1 EPE shall arrange all scheduling services necessary to ensure compliance with NERC/WECC operating policies and criteria, Transmission Provider OATT requirements, including CAISO EIM requirements, and any other applicable guidelines. Prior to the implementation and applicability to the Generating Facility of any energy market, to the extent scheduling is required now or in the future, EPE shall schedule all Metered Output in accordance with NERC/WECC operating polices and criteria, Transmission Provider OATT requirements and any other applicable guidelines in a manner maximizing Metered Output from the Generating Facility based on the then-most-current forecast of energy provided by Seller, except for Transmission Provider Curtailments, Reliability Curtailments, Seller Forced Outages, Scheduled Maintenance Outages, Force Majeure Events, and EPE Curtailments. At least thirty (30) Days prior to the anticipated Commercial Operation Date, Seller shall provide EPE with a good faith estimate of the quantity of Metered Output it expects to generate for the remainder of that Commercial Operation Year. By July 1 of each succeeding Commercial Operation Year, Seller shall provide EPE with a good faith estimate of the hourly quantities of Energy Output that Seller expects to generate in the following Commercial Operation Year. In addition, Seller shall also provide good faith estimates of the daily quantity of Energy to be delivered to the Point of Delivery or the Solar Charging Point, as requested by EPE. Seller shall configure the ramp rate for the Generating Facility such that it will not generate energy at a rate that increases greater than twenty (20) MW per minute; *provided*, if any Energy in excess of the ramp rate limit can be utilized to charge the Energy Storage Facility, Seller may deliver such excess Energy to the Solar Charging Point and EPE shall receive and purchase such Energy at the Solar Energy Output Payment Rate. For the avoidance of doubt, EPE shall not be obligated to maintain available capacity in the Energy Storage Facility to accept excess Energy that exceeds the ramp rate limit.

7.4.2 If at any point during the Delivery Term, (i) an alternative market design is implemented in which the Generating Facility will or can participate in an energy market, or (ii) either the Generating Facility, the Electric Interconnection Point or EPE no longer reside in the same market (clauses (i) and (ii), a "***Market Event***"), and such Market Event materially changes the interconnection and delivery requirements in this PPA, the Parties shall cooperate in good faith to facilitate the delivery of Energy Output from the Generating Facility to the Point of Delivery consistent with this PPA to the extent possible; *provided*, that Seller's liabilities shall not increase, and any costs, charges, or fees incurred by Seller or associated with any changes agreed by the Parties to this PPA or the Parties' obligations under this PPA as a result of this Section 7.4.2 shall be borne by EPE in their entirety and there shall be no changes to the Solar Energy Output Payment Rate or the Solar Energy Payment in connection with this Section 7.4.2.

7.5 Forced Outages

7.5.1 EPE and Seller shall promptly advise one another of events that may form the basis for a declaration of the existence or termination of an EPE Curtailment, Transmission Provider Curtailment, Reliability Curtailments, Seller Excused Hours, or a Seller Forced Outage.

EPE or Seller (as appropriate) shall at the earliest practicable date provide the other Party written notice ("***Outage Notice***") of the declaration of the existence of an EPE Curtailment, Transmission Provider Curtailment, Reliability Curtailment, Seller Excused Hours, or a Seller Forced Outage. Seller shall provide such notice to EPE's System Control Center. An Outage Notice provided by either Party shall contain information regarding the beginning date and time of the event, the expected end date and time of such event, and the expected Metered Output, if any, that would be available for delivery at the Point of Delivery during such event. EPE or Seller (as appropriate) shall keep the other Party informed of any developments that will affect either the duration of such event or the availability of the Generating Facility during or after the end of such event. In addition, Seller shall comply with all then-current EPE, NERC and WECC generating unit outage reporting requirements, as they may be revised from time-to-time.

7.5.2 Within five (5) Business Days after the end of each Month during the Delivery Term, Seller shall prepare, maintain and deliver to EPE a schedule that identifies all Scheduled Maintenance Outages, deratings and Seller Forced Outages that occurred during such Month. The data reported must meet all requirements specified in the NERC Generating Availability Data System (GADS) manual. In the event of any disagreement between EPE and Seller concerning the schedule prepared by Seller, the Parties shall promptly confer to resolve the disagreement.

ARTICLE 8 PAYMENT CALCULATIONS

8.1 Billing Components

The total due from EPE to Seller for each Monthly Billing Period during the Term shall be paid in accordance with the invoicing procedures set forth in Section 9.1. Charges will consist of the following, and, subject to Section 3.9, will begin on the first Day of the Test Period:

(a) Solar Energy Payment. Subject to the other provisions of this PPA, EPE shall accept and pay for Energy Output generated at the Generating Facility and delivered by Seller to the Point of Delivery. EPE shall pay Seller in accordance with Section 3.9 for all Test Energy, and in respect of all other Energy Output an amount equal to the sum of (a) the product of (i) the aggregate amount of Energy Output (excluding any Test Energy) delivered directly from the Generating Facility to the Point of Delivery plus (ii) the aggregate amount of Energy Output (excluding Test Energy) delivered to the Solar Charging Point multiplied by (iii) the Solar Energy Output Payment Rate, plus (b) the product of (i) the Deemed Delivered Energy Price, multiplied by (ii) each MWh of Deemed Delivered Energy resulting from any EPE Curtailment (the "***Solar Energy Payment***"). For illustrative purposes only, a sample calculation of the Solar Energy Payment that would be owed by EPE under certain stated assumptions is provided in Exhibit M. For the avoidance of doubt, the Solar Energy Output Payment Rate also compensates Seller for the associated Environmental Attributes, RECs, and Ancillary Services delivered in any Monthly Billing Period. The Solar Energy Output Payment Rate does not include any amounts for which EPE is responsible for paying or reimbursing Seller for under Section 9.7. For the

avoidance of doubt, nothing in this PPA confers to EPE the right to, and EPE shall not, instruct Seller to reduce any Energy Output from the Generating Facility for the provision of Ancillary Services or any other financial consideration.

(b) NMPTCs. The Parties acknowledge and agree that, as of the Execution Date, neither the Generating Facility nor any of the Energy Output qualifies for NMPTCs under the NMPTC Statute. If, at any time during the Term, NMPTCs become available in connection with the Generating Facility or the Energy Output, EPE and Seller shall negotiate in good faith and agree upon an arrangement for sharing the benefits associated with the monetization of any such NMPTCs that the Generating Facility or any Energy Output may become eligible evenly between EPE and Seller; provided that (i) any decision to monetize any NMPTCs will be in Seller's sole discretion and (ii) any obligations of Seller under or arising out of this Section 8.1(b) shall be subject to the Compliance Cost Cap and the other requirements of Section 22.2.

8.2 Payment Support Requirement

Each Party shall use commercially reasonable efforts to defend, before any Governmental Authority, all terms and conditions of this PPA consistent with Applicable Law.

8.3 Survival on Termination

Subject to Section 6.1, the provisions of this Article 8 shall survive the repudiation, termination, or expiration of this PPA for so long as may be necessary to give effect to any outstanding payment obligations of the Parties due and payable prior to any such repudiation, termination, or expiration.

ARTICLE 9 BILLING AND PAYMENT PROCEDURES

9.1 Statements and Payment of Electricity Payments

9.1.1 Seller shall read or have read on its behalf the Electric Metering Devices at the Point(s) of Delivery at 11:59 p.m. MPT on the last Day of each Month during the Delivery Term, unless otherwise mutually agreed by the Parties.

9.1.2 Payments due shall be determined and adjusted in accordance with Article 8 and Section 4.1.1. From and after the start of the Delivery Term, EPE shall pay to Seller, monthly in arrears, payments in accordance with the provisions of Section 9.1.3.

9.1.3 On or before the tenth (10th) Day of each Month following the Month in which the Delivery Term commences, Seller shall prepare an invoice showing the amount payable by EPE to Seller pursuant to Article 8 (in Dollars) for the preceding Month. Each such invoice shall show the Solar Energy Payment and supporting information and calculations, in reasonable detail,

including an Attestation and Bill of Sale verifying the associated RECs and Environmental Attributes, if applicable, in the form of Exhibit H ("***Attestation and Bill of Sale***").

9.1.4 EPE shall, subject to Section 9.5 and Section 9.9, pay all invoices within thirty (30) Days after the date EPE receives Seller's invoice. If EPE should dispute a portion of the charges set forth on any invoice, it shall nonetheless pay all amounts not in dispute by the applicable due date.

9.1.5 If banks in El Paso, Texas, are permitted to close on any date on which any payment by EPE would otherwise have been due, then EPE shall make such payment on the Business Day that immediately follows such payment date.

9.1.6 All payments specified in this Section 9.1 shall be made to an account designated by Seller in Exhibit D, as such account may be changed by Seller at any time upon written notice to EPE.

9.2 Miscellaneous Payments

Any amounts due to either Seller or EPE under this PPA, other than those specified in Section 9.1, shall be paid within thirty (30) Days following receipt by the other Party of an itemized invoice from the Party to whom such amounts are due setting forth, in reasonable detail, the basis for such payment.

9.3 Currency and Method of Payment

Notwithstanding anything contained in this PPA, all payments to be made by either Seller or EPE under this PPA shall be made in Dollars in immediately available cleared funds by wire transfer into the relevant account specified in Exhibit D or, if no account is specified, into the account designated by the receiving Party.

9.4 Default Interest

Except where payment is the subject of a bona fide dispute (in which case it shall be treated under Section 9.5), or where otherwise waived by the Party entitled to interest, if any payment due from EPE to Seller or from Seller to EPE under this PPA is not paid when due, then, in addition to such unpaid amount, interest shall be due and payable thereon. Applicable interest shall be calculated at a rate equal to the lower of (i) the "prime" rate as published in *The Wall Street Journal* on the first Business Day of each Month plus two percent (2%) and (ii) the maximum interest rate allowed by Applicable Law ("***Default Rate***"), as in effect from time to time and shall continue to accrue from the date on which such payment became overdue to and until the date such payment is made in full (both dates inclusive).

9.5 Disputed Items

9.5.1 Either Party ("***Disputing Party***") may dispute in good faith the accuracy of a reading of the Electric Metering Devices and/or the accuracy of an invoice. Where a reading or bill is the subject of a dispute in good faith, the Disputing Party shall give written notice to the other Party within ten (10) Days after the delivery of the invoice or reading by the other Party, together with details of its reasons for such dispute. The Disputing Party shall make payment of any undisputed amounts to the other Party by the due date for payment specified in such invoice. The Parties shall use all reasonable efforts to resolve the dispute in accordance with Section 14.8. Any amount or adjustment with respect to a meter reading subsequently agreed to by the Parties or determined to be due shall be made (in each case in settlement of a dispute) by a credit or additional charge on the next bill rendered (as the case may be).

9.5.2 All amounts paid as a result of the settlement of a dispute shall be paid with interest thereon at the Default Rate from the Day on which such payment originally fell due to and until the date such payment is made in full (both dates inclusive), unless otherwise waived by the Party entitled to such interest.

9.6 Statement Errors

In the event that either Party becomes aware of any error in any statement, such Party shall, immediately upon discovery of the error, notify in writing the other Party of the error and shall rectify such error (whether such error was in the form of an underpayment or overpayment) within thirty (30) Days of such notification. A Party must notify the other Party of any error within three hundred sixty five (365) Days of such error.

9.7 Taxes

9.7.1 All Energy delivered by Seller to EPE under this PPA shall be sales by Seller for resale, with EPE reselling such Energy. EPE shall obtain and provide Seller an appropriate New Mexico Nontaxable Transaction Certificate prior to the date any sales under this PPA occur. Since the Energy delivered by Seller to EPE under this PPA should qualify as sales by Seller for resale, the Parties further acknowledge their understanding that no gross receipts Tax should be applicable to the sale or delivery of Energy Output under this PPA; *provided*, *however*, that in the event any such Tax is or becomes applicable, EPE shall reimburse Seller for such Tax. During the Delivery Term, Seller and EPE each covenant that it will take all actions required to qualify the Energy delivered under this PPA, and refrain from taking any actions that would cause the Energy delivered under this PPA to not qualify, for a New Mexico Type 2 Nontaxable Transaction Certificate.

9.7.2 On all invoices, Seller shall separately show all New Mexico gross receipts, compensating, sales, and other similar taxes charged to EPE; provided, that in no event will interest or penalties on such taxes be reimbursable by EPE. If the sale of Energy takes place on tribal land,

Seller will comply with applicable state and tribal laws governing the reporting and payment of gross receipts taxes on those transactions.

9.7.3 Seller shall be responsible and shall pay when due all income, gross receipts, compensating, use, valued added, employment, ad valorem, personal real property or other similar Taxes, including any associated interest and penalty assessments and any and all franchise fees or similar fees assessed against Seller or the Generating Facility due to the construction, ownership, leasing, operation or maintenance of the Generating Facility, or any components or appurtenances thereof, including all Taxes, fees, allowances, trading credits and other offsets and impositions for wastes and emissions (including carbon-based compounds, oxides of nitrogen and sulfur, mercury and other Hazardous Materials) produced by the Generating Facility. If EPE is assessed any Taxes or associated fees as a result of the improvement of a Site due to the existence of the Generating Facility on the Site, EPE shall immediately notify Seller. EPE and Seller shall cooperate in contesting such assessment. If, after resolution of the matter, Taxes are imposed on EPE as a result of the improvement of the Site due to the existence of the Generating Facility on the Site, Seller shall reimburse EPE for such Taxes. Seller shall not be obligated to pay or reimburse EPE for Taxes imposed on or measured by EPE's overall revenues or income. Seller's prices under Article 8 are inclusive of such Taxes, allowances and credits during the Term.

9.7.4 If a Party is required to remit or pay Taxes that are the other Party's responsibility under this PPA, such Party shall promptly reimburse the other Party for such Taxes. Consistent with Applicable Law, the Parties shall use all reasonable efforts to administer this PPA and implement the provisions in this PPA in a manner that will minimize Taxes due and payable by all Parties.

9.7.5 The Parties shall provide each other, upon written request, with copies of any documentation respecting this PPA or the Generating Facility that may be reasonably necessary in the ordinary course of any inter-governmental, state, local, municipal or other political subdivision tax audit inquiry or investigation.

9.7.6 Consistent with Applicable Law, the Parties shall cooperate to minimize Taxes; however, no Party shall be obligated to incur any extraordinary financial burden to reduce Taxes for which the other Party is responsible under this PPA.

9.8 Setoff and Payment Adjustments

Except as otherwise expressly provided for in this PPA, including Section 9.9, all payments between the Parties under this PPA shall be made free of any restriction or condition and without deduction or withholding on account of any other amount, whether by way of setoff or otherwise.

9.9 Netting

9.9.1 A Party at any time may offset against any and all amounts that may be due and owed to the other Party under this PPA, including damages and other payments that are owed by a Party to the other Party pursuant to this PPA. Undisputed and non-offset portions of amounts invoiced under this PPA shall be paid on or before the due date or shall be subject to the late payment interest charges set forth in Section 9.4.

9.9.2 If Seller and EPE net their obligations to each other under this PPA, then such amounts will be aggregated, and Seller and EPE will discharge their obligations to pay through netting of payments on a current accounting basis. If the amounts owed by EPE or Seller to the other are equal on a current accounting basis, neither shall be required to make payment under this PPA.

9.10 Survival on Termination

Subject to Section 6.1, the provisions of this Article 9 shall survive the repudiation, termination or expiration of this PPA for so long as may be necessary to give effect to any outstanding payment obligations of the Parties that became due and payable prior to any such repudiation, termination or expiration.

ARTICLE 10 OPERATIONS AND MAINTENANCE

10.1 Construction of the Generating Facility

10.1.1 Seller will diligently pursue the development and construction of the Generating Facility using commercially reasonable efforts consistent with Prudent Utility Practices and in compliance with the terms and conditions of the Interconnection Agreements, the Shared Facilities Agreement, and this PPA. Seller will be solely responsible for, and the Solar Energy Output Payment Rate will not be adjusted to accommodate, increased costs or any failure to obtain any Tax Benefits. On and after the Execution Date through the start of construction, Seller will provide EPE monthly development and construction updates.

10.1.2 On and after the start of construction and through the Commercial Operation Date, Seller will provide EPE monthly construction updates. If Seller becomes aware of any critical milestone that will not be achieved by the required date, Seller must provide EPE written notice and a recovery plan to eliminate any delay in the construction schedule. In no event will Seller's failure to complete one or more critical milestones by the established dates change, delay or otherwise affect the requirement to achieve Commercial Operation by the Outside Commercial Operation Date. EPE shall have the right to monitor the construction, commissioning, start-up, testing and operations of the Generating Facility and to be present during the commissioning, start-up and testing of the Generating Facility; *provided*, *however*, that EPE shall comply with all of

Seller's applicable safety and health rules and requirements and shall conduct itself in a manner that will not unreasonably interfere with the Generating Facility's operations.

10.1.3 Seller may not modify, alter or otherwise change the Generating Facility without the prior written consent of EPE, except (i) as required by Prudent Utility Practices or Applicable Law; (ii) for modifications, alterations, expansions or other changes that would not be expected to materially and adversely alter the performance of the Generating Facility or materially and adversely impact the capabilities of the Generating Facility; or (iii) in connection with maintenance on the Generating Facility, including repairs and replacement of equipment, as determined to be reasonable or necessary by Seller.

10.1.4 Seller shall designate (by a written notice delivered to EPE by the Execution Date) a Generating Facility Manager reasonably acceptable to EPE who shall have full responsibility for overseeing the performance of construction, commissioning, start-up and testing activities conducted at the Generating Facility and who shall act as a single point of contact in all matters on behalf of Seller ("***Generating Facility Manager***"). Seller may designate a new Generating Facility Manager from time to time by a written notice delivered to EPE. Seller's Generating Facility Manager shall be deemed to have full authority to act on behalf of Seller, and, subject to satisfaction of the requirements set forth in Section 14.1, notices given by EPE to the Generating Facility Manager shall be deemed as having been given to Seller.

10.1.5 Other than the rights and obligations of EPE specified in this PPA and any documents ancillary hereto, neither this PPA nor any such ancillary document shall be interpreted to create in favor of EPE, and EPE specifically disclaims, any right, title or interest in any part of the Generating Facility.

10.2 Commissioning Tests

Seller shall give EPE at least sixty (60) Days' prior notice of the approximate test date and of the proposed tests scheduled relating to the commissioning of the Generating Facility ("***Commissioning Tests***") as described in Exhibit F. Representatives of EPE shall have the right to be present at all such testing; *provided*, *however*, that such representatives of EPE shall comply with all of Seller's applicable safety and health rules and requirements and shall conduct themselves in a manner that will not unreasonably interfere with the Commissioning Tests. Seller shall promptly notify EPE of any changes to the test date or the date of any Commissioning Tests relating to the Generating Facility in order that EPE may arrange for its respective representatives to attend.

10.3 Access to and Inspection of the Generating Facility

10.3.1 Seller shall provide EPE and its authorized agents, employees and inspectors reasonable access to the Generating Facility, including the control room and Seller's Interconnection Facilities, for the purposes set forth in this PPA. EPE acknowledges that such

access does not provide EPE with the right to direct or modify the operation of the Generating Facility in any way and further acknowledges that any exercise by EPE of its rights under this Section 10.3.1 shall be at its own risk and expense; *provided*, *however*, that EPE shall comply with all of Seller's applicable safety and health rules and requirements and shall conduct itself in a manner that will not unreasonably interfere with the Generating Facility's operations.

10.3.2 No inspections of the Generating Facility, whether by EPE or otherwise, and no acceptance or approval given under this PPA, shall relieve Seller of or reduce its obligation to maintain the Generating Facility and operate the same in accordance with this PPA and Prudent Utility Practices. In no event shall any statement, representation, or lack thereof by EPE, either express or implied, relieve Seller of its exclusive responsibility for the Generating Facility. Any inspection of Seller's property or equipment by EPE, or any review by EPE or consent by EPE to Seller's plans, shall not be construed as endorsing the design, fitness or operation of the Generating Facility equipment nor as a warranty or guarantee.

10.4 Operating Parameters

10.4.1 Seller shall operate or procure the operation of the Generating Facility in accordance with Prudent Utility Practices ("***Operating Parameters***"), subject only to Emergency Conditions and Force Majeure Events; *provided*, that during the Delivery Term, Seller shall: (i) have the sole responsibility to, and shall at its sole expense, operate and maintain the Generating Facility in accordance with all requirements set forth in this PPA, and (ii) comply with reasonable requirements of EPE regarding day-to-day or hour-by-hour communications with EPE. Subject to compliance with the Operating Parameters, Seller agrees to operate the Generating Facility in such a manner that Energy Output delivered by Seller will meet all requirements for voltage level, harmonics, power factor, VArs, Ancillary Services and other electrical specifications required by the Transmission Provider and will have the capabilities to be dispatched manually by Seller as is necessary to comply with the provisions of this PPA.

10.4.2 Seller shall operate the Generating Facility such that all system protective equipment is in service whenever the Generating Facility is connected to, or is operated in parallel with, the Transmission Provider's Transmission System, except for normal testing and repair. Seller shall provide adequate system protection and control devices to ensure safe and protected operation of all energized equipment during normal testing and repair. The Generating Facility's protective equipment shall meet the Institute of Electrical and Electronic Engineers standards and Prudent Utility Practices. Seller shall have qualified independent, third-party personnel test, calibrate and certify in writing the proper functioning of all protective equipment at least once every twelve (12) Months during the Delivery Term. Seller shall perform a unit functional trip test after each overhaul of the Generating Facility's major equipment and shall provide results to EPE in writing prior to returning the equipment to service. All of the foregoing shall be conducted in accordance with Prudent Utility Practices.

10.5 Operating Procedures

10.5.1 Not later than thirty (30) Days before the Commercial Operation Date, an operating committee consisting of Seller and EPE representatives shall develop mutually agreeable written Operating Procedures for integration of the Generating Facility into EPE's system. Operating Procedures shall include, but not be limited to, methods of day-to-day communications; metering, telemetering, telecommunications, and data acquisition procedures; key personnel lists for Seller and EPE, including an appointed authorized representative for each Party; clearances and switching practices; operations and maintenance scheduling and reporting; scheduling and forecasting practices; daily capacity and Energy Output reports; unit operations log; Seller Forced Outage and planned outage reporting, and such other matters as may be mutually agreed upon by the Parties. Seller must staff, operate, maintain and control the Generating Facility at all times consistent with the Operating Procedures, this PPA, Prudent Utility Practice, Applicable Laws and required permits. The Operating Procedures also will require Seller to take all measures necessary to remediate or otherwise correct any breach of environmental protection regulations as required under Applicable Law. Personnel of Seller capable of starting, running, and stopping the Generating Facility must be available, either at the Generating Facility or capable of being at the Generating Facility on twelve (12) hours' notice. Seller will make qualified personnel available twenty-four (24) hours per Day, seven (7) Days per week to perform scheduling and receive and give communications relating to the operation and dispatch of the Generating Facility. EPE will use commercially reasonable efforts to notify Seller twenty-four (24) hours in advance of potentially critical start-ups.

10.5.2 Seller will prepare detailed test protocols and procedures for any tests to be performed in connection with achieving Commercial Operation and for periodic tests as required within this PPA. The protocols and procedures will be developed by Seller in accordance with the requirements of this PPA and the appropriate power test code standards for solar generating facilities. Draft protocols and procedures must be submitted to EPE for review and approval, which approval will not be withheld unreasonably.

10.5.3 Notwithstanding any other provision of this PPA, Seller shall not be required to operate the Generating Facility in any way that would be inconsistent with the Operating Limitations (as defined in the ESA) agreed to in the ESA.

10.6 Generating Facility Maintenance

10.6.1 Seller shall maintain all Generating Facility equipment or cause the same to be maintained at all times in accordance with Prudent Utility Practices and otherwise in accordance with this PPA. At least sixty (60) Days before the Commercial Operation Date, Seller will provide EPE a notice of Scheduled Maintenance Outages for the Generating Facility for the first Commercial Operation Year within the Term. Thereafter, no later than September 1 of each Commercial Operation Year, Seller shall provide EPE with a non-binding notice of the annual Scheduled Maintenance Outages for the following Commercial Operation Year and a notice of

estimated long-term Scheduled Maintenance Outages for the next four (4) Commercial Operation Years. Each notice of Scheduled Maintenance Outages must identify each planned interruption and/or reduction of the Generating Facility's generation, including the duration of such event. Each annual Scheduled Maintenance Outage for the Commercial Operation Year will be subject to approval by EPE, not to be unreasonably withheld. EPE may, within fifteen (15) Days after receipt of the schedule, request reasonable modifications to the schedule. Seller may not schedule any interruption or reduction to the Generating Facility's generation for any reason at any time during May 1 through September 1, December, or January without the prior written approval of EPE, which approval may be withheld or granted in EPE's sole discretion. EPE may request Seller to defer or reschedule any Scheduled Maintenance Outage up to forty-eight (48) hours before commencement of the outage. Seller must give EPE no less than ninety (90) Days' advance notice of any proposed change in the annual maintenance schedule. Such requested changes in the schedule shall not materially adversely impact EPE, and Seller agrees to compensate EPE for any costs incurred by EPE as a result of such change. Notwithstanding any provision in this PPA to the contrary, prior notice to, and approval from, EPE shall not be required if any such maintenance is required for safety, in response to Emergency Conditions, or compliance with Applicable Laws, and such maintenance cannot be delayed until the next Scheduled Maintenance Outage.

10.6.2 Seller shall be responsible (at its own cost and expense) for timely obtaining, maintaining, and complying with all agreements, arrangements and permits necessary for delivery of the Energy Output to the Point of Delivery. Upon the reasonable, written request of EPE, Seller shall make available to EPE copies of any environmental permits, plans, and/or studies related to the Generating Facility.

10.7 Sales to Third Parties

As of the start of the Test Period, Seller shall not sell or divert Energy Output to a third Person.

10.8 Weather Stations

10.8.1 Seller shall, at Seller's cost and no later than six (6) Months prior to the Commercial Operation Date, provide, install, own, operate, and maintain a minimum of four (4) stand-alone meteorological stations ("***Weather Stations***") at the Generating Facility to monitor and report weather data, for use by both EPE and Seller. The Weather Stations shall be equally spaced around the perimeter of the solar array to provide representative conditions for the whole of the Generating Facility and to provide information on changing weather conditions for short-term (e.g., 5 to 15 minute) generation forecasting. The Weather Stations shall include the capability for measuring, indicating, and recording PV cell temperature, wind speed and direction (instantaneous and average), barometric pressure, solar radiation, rainfall (daily and monthly plus rate), ambient temperature, and humidity. Seller shall submit to EPE for review and approval, Seller's technical specifications for the Weather Stations along with a site plan showing the location of the station(s) (GPS coordinates), the location of all solar generating units, photovoltaic

modules, current inverters, and other prominent features, as applicable. The system shall be interconnected via a web-based file transfer protocol, or other mutually agreeable protocol, to provide indication of all measured parameters to EPE and the data shall be available to EPE via a PI historian interface.

10.8.2 Seller shall not select the type of Weather Station without the prior written consent of EPE, which shall not be unreasonably withheld. No later than twelve (12) Months prior to the Commercial Operation Date, the Parties shall agree on the locations of the Weather Stations and any applicable protocols for testing, accuracy, failure, or other relevant characteristics of the Weather Stations.

10.9 Performance Guarantee

In each Performance Measurement Period, Seller shall deliver to the Point of Delivery or the Solar Charging Point no less than the Minimum Performance Volume for such Performance Measurement Period in accordance with Exhibit I (the "***Performance Guarantee***").

ARTICLE 11 RECS AND ENVIRONMENTAL ATTRIBUTES

11.1 Sale of RECs and Environmental Attributes

11.1.1 Other than as specified in Section 11.1.4 and Section 11.1.5, effective from the date on which the Generating Facility first delivers Energy for sale to EPE at the Point of Delivery, Seller shall transfer to EPE, free and clear of all claims, liens, security interests, and encumbrances, of any kind, nature, and description, all right, title, and interest in and to RECs and Environmental Attributes associated with the generation of Energy. Seller shall make the RECs available to EPE no later than five (5) Business Days after the RECs are created in WREGIS, subject to a day-for-day extension based on availability of the WREGIS website. Seller shall be liable for EPE's costs to replace the RECs if Seller fails to deliver RECs and such failure is not cured within thirty (30) Days after written notice thereof. The RECs and Environmental Attributes transferred under this PPA shall be bundled with the associated Energy, and EPE shall pay Seller for the bundled RECs and Environmental Attributes and Energy as set forth in this PPA.

11.1.2 Seller and EPE shall execute all documents and instruments necessary to effect transfer of the RECs and Environmental Attributes to EPE or its respective designee(s).

11.1.3 Ownership by EPE of Environmental Attributes and RECs shall include any Environmental Attributes and RECs that are reserved or "banked" throughout the Term, but not used, sold, assigned or otherwise transferred during the Term. EPE may, to the extent permitted by Applicable Law and this PPA, assign its rights, title and interest in and to any RECs and Environmental Attributes associated with the Generating Facility to one or more third parties under any transaction permitted by Applicable Law.

11.1.4 Tax Benefits in effect on the Execution Date or any successor or other provision providing for a federal, state, and/or local tax credit related to the ownership or operation of any portion of the Generating Facility shall be owned by Seller.

11.1.5 Seller shall, at its sole expense and prior to commencement of the Delivery Term, take all actions and execute all documents or instruments necessary to ensure that the Generating Facility is registered as a generating unit in WREGIS for the purpose of tracking all Renewable Energy Certificates corresponding to all Metered Output, and that all associated WREGIS Certificates are issued and tracked and transferred in a timely manner to EPE. Seller shall comply with all Applicable Laws, including the WREGIS Operating Rules, regarding the certification and transfer of such WREGIS Certificates to EPE and EPE shall be given sole title to all such WREGIS Certificates. Seller shall promptly provide written documentation to EPE evidencing that the Generating Facility has been registered in WREGIS. Seller shall be responsible for all expenses associated with registering the Generating Facility with WREGIS, establishing and maintaining Seller's WREGIS account, paying WREGIS Certificate issuance and transfer fees, and transferring WREGIS Certificates from Seller's WREGIS account to EPE's WREGIS account.

11.1.6 Seller shall register the Generating Facility, as necessary, so that the Generating Facility is compliant with reporting requirements related to RECs and Environmental Attributes and certification requirements under any applicable federal, state or regional program or Applicable Law. Notwithstanding the foregoing, Seller shall not be required to expend more than Five Thousand Dollars ($5,000) per MW annually and Ten Thousand Dollars ($10,000) per MW in the aggregate to maintain compliance due to regulatory changes relating to RECs.

ARTICLE 12 PURCHASE OPTION

12.1 EPE's Purchase Option on Seller Event of Default

Subject to, and without in any way limiting the terms of, Article 19 or any step-in or other rights of any Lender, and subject further to Applicable Law, if, prior to the Commercial Operation Date, EPE terminates this PPA due to an uncured Seller Event of Default, then EPE shall have the option to purchase the Generating Facility and all rights of Seller therein or relating thereto (the "***Option***") in accordance with the provisions of this Article 12 for the greater of (i) the Fair Market Value (as determined in accordance with Section 12.2) or (ii) the amount which when applied pursuant to the applicable financing or Tax Equity Financing documents will (a) repay the Lenders in full all amounts owed to them, including principal, premium, interest, fees, breakage costs, penalties, expenses, indemnities, and any other amounts due upon acceleration, prepayment, termination or restructuring of any interest rate or other swaps or hedges entered into in connection with such financing, and (b) pay the Tax Equity Investors an amount sufficient for such Tax Equity Investors to achieve their target return on their overall tax equity investment (or if the Tax Equity Financing has a fixed date as the flip date, the amount necessary to allow the Tax Equity Investors

to achieve a rate of return on their overall tax equity investment equal to the rate of return used to determine the flip date under the Tax Equity Financing documents) (the "***Return Amount***"); *provided, however, that* EPE will not have the right to exercise the Option if, as of the Early Termination Date, the Generating Facility is owned, directly or indirectly, by Ultimate Parent. EPE shall indicate its preliminary interest with respect to the Option, if at all, by delivering to Seller a written notice of interest no more than thirty (30) Days after the Early Termination Date (the "***Preliminary Option Notice***"). If EPE fails to deliver the Preliminary Option Notice by such date, the Option shall terminate.

12.2 Determination of Fair Market Value of the Generating Facility

12.2.1 Promptly following delivery of the Preliminary Option Notice, the Parties shall mutually agree to the fair market value of the Generating Facility (the "***Fair Market Value***") and Seller shall provide EPE a calculation of the Return Amount, including all reasonably requested supporting documentation with respect to the calculation of the Return Amount. If EPE and Seller cannot mutually agree to a Fair Market Value of the Generating Facility within fifteen (15) Days of delivery of the Preliminary Option Notice, then each of EPE and Seller shall select and retain, at each Party's own cost and expense, a nationally recognized independent appraiser with experience and expertise in appraising solar generation and energy storage facilities to determine separately the Fair Market Value of the Generating Facility. Subject to the appraisers' execution and delivery to Seller of a suitable confidentiality agreement in a form reasonably acceptable to Seller, Seller shall provide both appraisers access to the Generating Facility and its books and records during normal business hours and upon prior written notice. The appraisers shall act reasonably and in good faith to determine the Fair Market Value of the Generating Facility and the Parties shall use their best efforts to cause the appraisers to complete such determination no later than fifty (50) Days following delivery of the Preliminary Option Notice. If for any reason (other than a failure by Seller to provide access hereunder to EPE's appraiser), one of the appraisals is not completed within seventy (70) Days following delivery of the Preliminary Option Notice, the results of the other completed appraisal shall be deemed the Fair Market Value of the Generating Facility.

12.2.2 Each Party may provide to both appraisers a list of factors which the Parties suggest the appraisers take into consideration when determining the Fair Market Value of the Generating Facility, consistent with Prudent Utility Practices. Any information provided to an appraiser by one Party shall be provided to the other appraiser and the other Party at the same time, it being the intent of the Parties that the appraisers have access to the same information in determining the Fair Market Value of the Generating Facility. EPE and Seller shall deliver the results of their respective appraisal to the other Party when completed. If so requested by either Party, the appraisals shall be exchanged simultaneously.

12.2.3 After both appraisals are completed and exchanged, the Parties and their appraisers shall promptly confer and attempt to agree upon the Fair Market Value of the Generating

Facility based on the appraisers' determinations. If, within twenty (20) Days after completion of both appraisals, the Parties cannot agree on the Fair Market Value of the Generating Facility, and the values of the appraisals are within ten percent (10%) of each other, the Fair Market Value of the Generating Facility shall be the simple average of the two appraisals. If the values of the two appraisals differ by ten percent (10%) or more, the first two appraisers shall choose a third nationally recognized independent appraiser with experience and expertise in appraising solar generation and energy storage facilities, or, if the first two appraisers fail to agree upon a third appraiser within ten (10) Days after the expiration of the twenty (20)-Day period following completion of both appraisals, such appointment shall be made by the American Arbitration Association upon application of either Party in accordance with the applicable rules and regulations of the American Arbitration Association for such selection. The third appraiser shall have access to the same information as was available to the other two appraisers. The Parties shall direct the third appraiser to determine the Fair Market Value of the Generating Facility within fifty (50) Days following retention of the third appraiser. The costs and expenses of such third appraiser shall be shared equally by the Parties. Upon determination of the Fair Market Value of the Generating Facility by the third appraiser, the Fair Market Value of the Generating Facility will he the simple average of the three appraisal values completed in accordance with this Section 12.2.

12.3 Option Exercise

12.3.1 Within ten (10) Days following the confirmation of the calculation of the Return Amount and the determination of the Fair Market Value of the Generating Facility pursuant to Section 12.2, and in no event later than one hundred eighty (180) Days following delivery of the Preliminary Option Notice (regardless of whether the Fair Market Value of the Generating Facility is determined and final), EPE shall notify Seller in writing, whether EPE elects to exercise the Option (the "***Final Option Notice***").

(a) If EPE fails to deliver a Final Option Notice by such applicable date or notifies Seller that it is electing not to exercise the Option, EPE's right to exercise the Option pursuant to Section 12.1 shall automatically terminate.

(b) If EPE delivers a valid and timely Final Option Notice electing to exercise the Option, Seller shall sell, transfer, assign and convey to EPE, and EPE shall purchase, receive and accept from Seller for the greater of (i) the Fair Market Value or (ii) the Return Amount, all of Seller's right, title and interest in and to the Generating Facility, on an "AS IS, WHERE IS" basis, subject to any then-existing liens, claims, encumbrances, or rights of others arising through Seller as of the closing date of the final and binding agreement entered into by and between Seller and EPE in connection with the exercise of the Option. In connection with such sale, transfer, assignment and conveyance, Seller shall (x) use commercially reasonable efforts to cooperate with all reasonable requests of EPE made in connection with such sale, transfer, assignment and conveyance, including assigning or transferring to EPE, to the extent necessary to consummate such sale, transfer, assignment and conveyance, any material project agreements relating to the Generating Facility and entered into by Seller prior to EPE's delivery of a valid and timely Final Option Notice, and for purposes of enabling EPE to obtain

any and all applicable Permits that are or will be required to be obtained by EPE in connection with the design, construction, operation or maintenance of the Generating Facility or the Site in compliance with Applicable Law; and (y) to the extent permitted by Applicable Law, provide EFE copies of all documents, instruments, plans, maps, specifications, manuals, drawings and other documentary materials relating to the design, construction, installation, operation, maintenance, modification and repair of the Generating Facility as shall be in Seller's possession and shall be reasonably appropriate or necessary for the continued operation of the Generating Facility.

12.3.2 If, despite the commercially reasonable and good faith efforts of each Party, the Parties fail to execute a final and binding agreement to facilitate the sale, transfer, assignment and conveyance of` the Generating Facility in accordance with this Article 12 within forty-five (45) Days of EPE providing the Final Option Notice to Seller, then either Party may elect to terminate the Option and the Option shall be of no further force or effect.

ARTICLE 13 DEFAULT AND REMEDIES

13.1 Events of Default of Seller

13.1.1 Any of the following events shall constitute an Event of Default of Seller upon its occurrence and no cure period shall be applicable:

(a) Seller's dissolution or liquidation;

(b) Seller's assignment of this PPA (or any of its rights hereunder) for the benefit of creditors, except as permitted pursuant to Article 19;

(c) Seller's filing of a petition in voluntary bankruptcy or insolvency or for reorganization or arrangement under the bankruptcy laws of the United States or under any insolvency law of any state, or Seller voluntarily taking advantage of any such law by answer or otherwise;

(d) During the Delivery Term, the sale by Seller to a third party, or diversion by Seller for any use, of Energy, RECs or Ancillary Services committed to EPE by Seller hereunder, except for Energy, RECs or Ancillary Services, as applicable, that EPE fails to accept or pay for and except upon or during the continuation of any EPE Event of Default;

(e) Seller's actual fraud, material misrepresentation or willful misconduct in connection with this PPA;

(f) Seller's failure to achieve the Commercial Operation Date for the Generating Facility on or prior to the Outside Commercial Operation Date, except as a result of a Force Majeure Event or Interconnection Delay; or

(g) Seller's failure to deliver RECs in accordance with the terms of this PPA, unless remedied within ten (10) Business Days of receipt of notice of such failure.

13.1.2 Any of the following events shall constitute an Event of Default of Seller upon the failure of Seller to cure such Event of Default within ten (10) Business Days after Seller's receipt of written notice from EPE of such Event of Default:

(a) Seller fails to provide and maintain in full force and effect the Security required pursuant to Article 20; or

(b) If Seller delivers a Seller Guaranty to satisfy the Security requirements set forth in Article 20 and (i) Seller Guarantor fails to make, when due, any payment required to be made in accordance with the terms of this PPA and the Seller Guaranty, (ii) Seller Guarantor fails to satisfy the requirements set forth in the definition of Seller Guarantor, or (iii) Seller Guarantor repudiates, disaffirms, disclaims, or rejects, in whole or in part, or challenges, the validity of the Seller Guaranty.

13.1.3 Any of the following events shall constitute an Event of Default of Seller upon the failure of Seller to cure such Event of Default within thirty (30) Days after Seller's receipt of written notice from EPE of such Event of Default:

(a) Seller's Abandonment of construction or operation of the Generating Facility;

(b) Except to the extent arising from the acts or omissions of the Transmission Provider or EPE or resulting from a Force Majeure Event, Seller is not able to deliver Energy to the Point of Delivery as a result of the Generating Facility failing to maintain interconnection service in accordance with the Interconnection Agreements or Seller otherwise fails to secure and maintain in effect any agreements required to deliver Energy to the Point of Delivery;

(c) Seller's failure to make any payment due to EPE under or in connection with this PPA (subject to Seller's rights with respect to disputed payments under Article 9 and net of outstanding damages and any other rights of offset that Seller may have pursuant to this PPA);

(d) The aggregate amount of Metered Output delivered to the Point of Delivery or the Solar Charging Point in any Performance Measurement Period plus Solar Excused Output for such period is less than sixty percent (60%) of the aggregate Expected Generation over two (2) consecutive Performance Measurement Periods; or

(e) Seller fails to register the Generating Facility within WREGIS in accordance with the terms of this PPA.

13.1.4 Any of the following events shall constitute an Event of Default of Seller upon the failure of Seller to cure such Event of Default within sixty (60) Days after Seller's receipt of

written notice from EPE of such Event of Default, or such longer period as may be necessary to effectuate a cure; *provided*, that Seller has commenced and is diligently pursuing a cure, not to exceed an additional thirty (30) Days:

(a) Seller's assignment of this PPA, or any Change of Control of Seller, or Seller's sale or transfer of its interest, or any part thereof, in the Generating Facility, except as permitted in accordance with Article 19;

(b) Any representation or warranty made by Seller in this PPA shall prove to have been false or misleading in any material respect when made or ceases to remain true during the Term if such cessation would reasonably be expected to result in a material adverse impact on EPE;

(c) The filing of an involuntary case in bankruptcy or any proceeding under any other insolvency law against Seller as debtor or Ultimate Parent or any Affiliate that could materially impact Seller's ability to perform its obligations hereunder; *provided*, *however*, that Seller does not obtain a stay or dismissal of the filing within the cure period; or

(d) Seller's failure to comply with any other material obligation under this PPA that is not a separate Event of Default of Seller, which would result in a material adverse impact on EPE.

13.2 Events of Default of EPE

13.2.1 Any of the following shall constitute an Event of Default of EPE upon its occurrence, and no cure period shall be applicable:

(a) EPE's dissolution or liquidation; *provided*, that division of EPE into multiple entities shall not constitute dissolution or liquidation;

(b) EPE's assignment of this PPA (or any of its rights hereunder) for the benefit of creditors; or

(c) EPE's filing of a voluntary petition in bankruptcy or insolvency or for reorganization or arrangement under the bankruptcy laws of the United States or under any insolvency law of any State, or EPE voluntarily taking advantage of any such law by answer or otherwise.

13.2.2 Any of the following shall constitute an Event of Default of EPE upon the failure of EPE to cure such Event of Default within thirty (30) Days after EPE's receipt of written notice from Seller of such Event of Default:

(a) EPE's failure to make any payment due hereunder (subject to EPE's rights with respect to disputed payments under Article 9 and net of outstanding damages and any other rights of offset that EPE may have pursuant to this PPA).

13.2.3 Any of the following shall constitute an Event of Default of EPE upon the failure of EPE to cure such Event of Default within sixty (60) Days after EPE's receipt of written notice from Seller of such Event of Default, or such longer period as may be necessary to effectuate a cure; *provided*, that Seller has commenced and is diligently pursuing a cure, not to exceed an additional thirty (30) Days:

(a) The filing of an involuntary case in bankruptcy or any proceeding under any other insolvency law against EPE, provided, however, that EPE does not obtain a stay or dismissal of the filing within the cure period;

(b) EPE's assignment of this PPA, except as permitted in accordance with Article 19;

(c) Any representation or warranty made by EPE in this PPA shall prove to have been false or misleading in any material respect when made or ceases to remain true during the Term if such cessation would reasonably be expected to result in a material adverse impact on Seller; or

(d) EPE's failure to comply with any other material obligation under this PPA that is not a separate Event of Default of EPE, which would result in a material adverse impact on Seller.

13.3 Damages Prior to Termination

13.3.1 Upon the occurrence of an Event of Default, and subject in each case to the limitation on damages set forth in Sections 13.7 and 13.11, the Non-Defaulting Party shall have the right to (i) collect damages accruing prior to the Early Termination Date of this PPA from the Defaulting Party as set forth in Section 13.3.2, (ii) suspend performance, (iii) with respect to a Seller Event of Default, exercise its rights pursuant to Section 13.10 with respect to any Security, and (iv) exercise its rights to terminate this PPA pursuant to Section 13.4.

13.3.2 For all Events of Default, the Non-Defaulting Party shall be entitled to receive from the Defaulting Party all of the damages incurred by the Non-Defaulting Party in connection with such Event of Default prior to the Early Termination Date as set forth in this PPA; *provided*, that if an Event of Default has occurred and has continued uncured for a period of one hundred eighty (180) Days, the Non-Defaulting Party shall be required to either waive its right to collect further damages on account of such Event of Default or elect to terminate this PPA as provided for in Section 13.4. If Seller is the Defaulting Party, the Parties agree that the damages recoverable by EPE hereunder on account of an Event of Default of Seller shall include an amount of cover damages equal to Replacement Energy Costs minus the product of (x) the quantity of Energy Output so replaced and (y) the Solar Energy Output Payment Rate. Further, Seller acknowledges and agrees that in addition to the foregoing, Seller shall be obligated to pay EPE any such damages associated with replacement of Energy Output notwithstanding the availability or prices of electric energy and capacity from other fuel sources, such as natural gas. Seller also shall be obligated to

pay EPE any penalties levied by any Governmental Authority in connection with Seller's failure to deliver to EPE any RECs and any Environmental Attributes pursuant to this PPA, to the extent such failure arises out of Seller's negligence or willful misconduct *provided,* that EPE has used commercially reasonable efforts to avoid, minimize or mitigate the same. Seller acknowledges that EPE entered into this PPA for the procurement of Energy Output, which includes RECs and Environmental Attributes. If EPE is the Defaulting Party, the Parties agree that damages recoverable by Seller hereunder on account of an Event of Default of EPE shall include costs and losses incurred by Seller due to such Event of Default, including, to the extent applicable, an amount of cover damages equal to the quantity of Energy Output produced by Seller following such Event of Default, plus, to the extent that Seller is unable to produce Energy Output due to the Event of Default of EPE, an additional quantity equal to the amount of Energy Output that would have been produced by Seller absent such Event of Default of EPE, each multiplied by the Solar Energy Output Payment Rate, plus any Grossed-Up PTC amount allocable to Seller's inability to produce Energy Output due to such Event of Default of EPE; *provided*, that the foregoing amount shall be reduced by an amount equal to (A) the amount of any revenues that Seller, using commercially reasonable efforts, is able to obtain by selling Energy Output to a third party or into the market, less (B) Seller's costs and expenses incurred to effectuate any such sales.

13.4 Termination

Upon the occurrence of an Event of Default that is not otherwise cured in accordance with Section 13.1 or 13.2, as applicable, the Non-Defaulting Party shall have the right to declare a date, which shall be between fifteen (15) and sixty (60) Days after the Defaulting Party's receipt of written notice thereof, upon which this PPA shall terminate ("***Early Termination Date***"). Upon the effective designation of an Early Termination Date, the Non-Defaulting Party will have the right to immediately suspend performance under this PPA, except that Seller may not suspend performance of its obligation to post and maintain Development Security and Delivery Term Security in accordance with Article 20. Neither Party shall have the right to terminate this PPA except as provided for upon the occurrence of an Event of Default as described above or as may be otherwise explicitly provided for in this PPA. Upon the termination of this PPA under this Section 13.4 for an Event of Default that is not otherwise cured in accordance with Section 13.1 or 13.2, as applicable, the Non-Defaulting Party shall be entitled to receive the Termination Payment from the Defaulting Party. As soon as practicable after the Early Termination Date, the Non-Defaulting Party shall (a) calculate the Termination Payment, and (b) give notice to the Defaulting Party of the amount of the Termination Payment. The notice shall include a written statement explaining in reasonable detail the calculation of such amount and the sources for such calculation. The Termination Payment shall be made to the Non-Defaulting Party, as applicable, within ten (10) Business Days after such notice is effective. If Seller is the Defaulting Party, the Termination Payment will equal the EPE Termination Payment, and if EPE is the Defaulting Party, the Termination Payment will equal the Seller Termination Payment. Notwithstanding the foregoing, if the Commercial Operation Date has not occurred by the Outside Commercial Operation Date, EPE may terminate this PPA in accordance with this Section 13.4, and the EPE

Termination Payment will be an amount equal to the Development Security less any Solar Capacity Delay Damages already paid to EPE. Neither Party shall have liability for damages or failure to deliver or purchase Energy Output after the effective date of such termination, including Replacement Energy Costs.

13.4.1 In the event that Seller is the Defaulting Party, as soon as practicable after notice of the Early Termination Date, EPE shall calculate the EPE Termination Payment in a commercially reasonable manner as of the Early Termination Date in accordance with this Section 13.4.1. The notice shall include a written statement explaining in reasonable detail the calculation of such amount. In calculating such amount, EPE shall use information from third parties who may include dealers in the relevant markets, end-users of the relevant product, information vendors and other sources of market information. EPE shall not have to enter into a replacement contract to establish an EPE Termination Payment.

13.4.2 In the event that EPE is the Defaulting Party, as soon as practicable after notice of the Early Termination Date, Seller shall deliver written notice to EPE of the amount of the Seller Termination Payment. The notice shall include a written statement explaining in reasonable detail the calculation of such amount. In calculating such amount, Seller shall use information from third parties who may include dealers in the relevant markets, end-users of the relevant product, information vendors and other sources of market information. Seller shall not have to enter into a replacement contract to establish a Seller Termination Payment.

13.5 [Reserved]

13.6 Remedies Cumulative

Subject to limitations on damages set forth in Sections 13.7 and 13.11, each right or remedy of the Parties provided for in this PPA shall be cumulative of and shall be in addition to every other right or remedy provided for in this PPA, and the exercise, or the beginning of the exercise, by a Party of any one or more of the rights or remedies provided for herein shall not preclude the simultaneous or later exercise by such Party of any or all other rights or remedies provided for herein.

13.7 Waiver and Exclusion of Other Damages

The Parties confirm that the express remedies and measures of damages provided in this PPA satisfy its essential purposes. If no remedy or measure of damages is expressly herein provided, the obligor's liability shall be limited to direct, actual damages only. Unless expressly provided herein or included in a third party claim covered by the indemnification provisions in Section 21.1 or arising from fraud or willful misconduct, neither Party shall be liable to the other Party for consequential, incidental, punitive, exemplary or indirect damages, lost profits or other business interruption damages by statute, in tort or contract, except to the extent expressly provided herein and except to the extent constituting or relating to lost or foregone Tax Benefits. To the

extent any damages required to be paid hereunder are deemed liquidated, the Parties acknowledge that the damages are difficult or impossible to determine, that otherwise obtaining an adequate remedy is inconvenient, and that the liquidated damages constitute a reasonable approximation of the harm or loss. It is the intent of the Parties that, except as expressly provided herein, the limitations herein imposed on remedies and the measure of damages be without regard to the cause or causes related thereto, including the negligence of any Party, whether such negligent be sole, joint or concurrent, or active or passive.

13.8 Payment of Amounts Due to EPE

Without limiting any other provisions of this Article 13 and at any time before or after termination of this PPA, EPE may send Seller an invoice for such damages or other amounts as are due to EPE at such time from Seller under this PPA, and such invoice shall be payable in the manner, and in accordance with the applicable provisions, set forth in Article 9, including the provision for late payment charges.

13.9 Duty to Mitigate

Each Party agrees that it has a duty to mitigate damages and covenants that it will use commercially reasonable efforts to minimize any damages it may incur as a result of the other Party's performance or non-performance of this PPA.

13.10 Security Rights

Upon or at any time after the occurrence and during the continuation of an Event of Default enumerated in Section 13.1 or an Early Termination Date affecting Seller, EPE may exercise any of the rights and remedies with respect to any Security, including any ancillary rights and remedies under Applicable Law then in effect. EPE shall apply the proceeds of the Security realized upon the exercise of any such rights or remedies to reduce Seller's obligations under this PPA, subject to EPE's obligation to return any surplus proceeds remaining after such obligations are satisfied in full.

13.11 Limit on Seller Liability

Notwithstanding any other provision of this PPA, Seller's aggregate liability under, arising out of or in connection with this PPA (including liability for any Solar Capacity Delay Damages, Performance Damages and any termination payment or damages arising hereunder) shall not exceed the amount of the Security required to be posted at the time such liability is incurred pursuant to Section 20.1.

ARTICLE 14 CONTRACT ADMINISTRATION AND NOTICES

14.1 Notices in Writing

Notices required by this PPA shall be addressed to the other Party at the addresses noted in Exhibit D as either Party updates them from time to time by written notice to the other Party. Any notice, request, consent, or other communication required or authorized under this PPA to be given by one Party to the other Party shall be in writing. It shall either be hand delivered or mailed via overnight service with signature required upon receipt, to the representative of said other Party. If hand delivered, the notice, request, consent or other communication shall be simultaneously sent by facsimile or other electronic means. Any such notice, request, consent, or other communication shall be deemed to have been received by the close of the Business Day on which it was hand delivered or transmitted electronically (unless hand delivered or transmitted after such close in which case it shall be deemed received at the close of the next Business Day). Real-time or routine communications concerning operation of the Generating Facility shall be exempt from this Section 14.1.

14.2 Representative for Notices

Each Party shall maintain a designated representative to receive notices, who shall be identified on Exhibit D. Either Party may, by written notice to the other Party, change the representative or the address to which such notices and communications are to be sent.

14.3 Authority of Representatives

The Parties' representatives designated above shall have authority to act for their respective principals in all technical matters relating to performance of this PPA and to attempt to resolve disputes or potential disputes. However, in their capacity as representatives, they shall not have the authority to amend or modify any provision of this PPA.

14.4 Records

Seller and EPE shall each keep and maintain complete and accurate records and all other data required by each of them for the purposes of proper administration of this PPA, including but not limited to books and records necessary for billing and payments and such records as may be required by any Governmental Authority or pursuant to Applicable Law. All records of Seller and EPE pertaining to the operation of the Generating Facility or this PPA as specified herein or otherwise shall be maintained at the Generating Facility or in an office of Seller or EPE, as applicable, in such format as may be required by Applicable Law and/or any Governmental Approval. Each Party shall have the right at its sole cost and expense, upon reasonable prior written notice to the other Party, during normal business hours, to examine and/or make copies of the records and data of such other Party relating to this PPA (including all records and data relating to or substantiating any charges paid by or to such other Party, MWh generated, Seller's operating

procedures, the Generating Facility equipment manuals and Operating Records). All records required hereunder shall be maintained in accordance with, and for the applicable time periods required by, Applicable Law and the Party's retention policies, but in no event less than five (5) years after the final payment is made under this PPA. Seller shall provide EPE copies of Operating Records upon EPE's request.

14.4.1 Operating and Maintenance Records. Seller shall maintain an accurate and up-to-date operating log, in electronic format, at the Generating Facility that will include, without limitation, power production records for each hour; dispatch and scheduled Energy production; changes in operating status; planned outages, deratings and curtailments; any unusual conditions found during inspections; environmental records including environmental permits, plans, and/or studies; meteorological data; maintenance; any other operating or maintenance records as may be required by state or federal regulatory authorities and WECC and any other information required under Prudent Utility Practice or any Generating Facility agreement (in the prescribed format); and EPE and Seller Forced Outages.

14.4.2 Billing and Payment Records. To facilitate payment and verification, Seller and EPE shall keep all books and records necessary for billing and payments in accordance with the provisions of Article 9 and grant the other Party reasonable access to those records.

14.4.3 Generating Facility Development Records and Data Submissions. Seller shall submit or cause to be submitted to EPE the following documents on or before the dates specified below:

(a) No later than thirty (30) Days after the Execution Date and ending on the Commercial Operation Date, (i) monthly construction progress reports in such form as may be agreed to by EPE in accordance with Section 10.1.1 and Section 10.1.2, and (ii) reports, when and as Seller becomes aware, of any new condition or event that may have a material adverse effect on the timely completion of the Generating Facility.

(b) No later than thirty (30) Days prior to the start of the Test Period, (i) evidence demonstrating that Seller has obtained all Governmental Approvals then required to be obtained for the ownership, operation and maintenance of, and the supply of Energy Output from, the Generating Facility in accordance with this PPA, and (ii) a list identifying the remaining Governmental Approvals for which Seller is responsible under the terms of this PPA, which Governmental Approvals are not yet required for the operation and maintenance of, and the supply of Energy Output from, the Generating Facility, together with a plan for obtaining such Governmental Approvals and an estimate of the time within which such Governmental Approvals will be obtained by Seller; *provided*, *however*, that the plan for obtaining any outstanding Governmental Approvals from any Governmental Authority which address environmental, health and safety matters shall be reasonably acceptable to EPE.

(c) As soon as available, but not later than sixty (60) Days following the, Commercial Operation Date for the Generating Facility, two (2) copies of all results of Commissioning Tests performed on the Solar Units.

(d) Upon request by EPE, one (1) signed and sealed copy of all as-built drawings for the Generating Facility, including the civil and architectural works.

(e) The receipt of the above schedules, data, certificates and reports by EPE shall not be construed as an endorsement by EPE of the design of the Generating Facility, does not constitute a warranty by EPE as to the safety, durability or reliability of the Generating Facility, otherwise relieve Seller of any of its obligations or potential liabilities under the Generating Facility contracts or, except with respect to the obligations of EPE to maintain the confidentiality of documents and information received by it, impose any obligation or liability on EPE.

14.5 Provision of Real-Time Data

Upon request by EPE, Seller shall provide real-time electronic access to EPE of all meteorological and other related data collected at the Generating Facility and corresponding unit availability data.

14.6 Examination of Records

EPE may review operating procedures, equipment manuals, Operating Records and data kept by Seller relating to transactions under and administration of this PPA, at any time during the period the records are required to be maintained, from time to time upon request and during normal business hours. EPE shall have the right, upon reasonable notice and at its sole expense (unless Seller has defaulted under this PPA, in which case Seller will bear the expense), to examine the records of Seller to the extent reasonably necessary to verify the accuracy of any statement, charge or computation made pursuant to this PPA. If any such examination reveals any inaccuracy in any invoice, the necessary adjustments in such invoice and any underpayment by EPE will be paid, and any overpayment by EPE will be reimbursed by Seller, promptly in accordance with payment provisions in this PPA.

14.7 Exhibits

Either Party may change the information for its notice addresses in Exhibit D at any time without the approval of the other Party. Changes to Exhibit A are subject to the requirements of Sections 3.2, 3.3, and 10.1.3. Exhibit B, and Exhibit E may be changed at any time with the mutual consent of both Parties.

14.8 Resolution of Issues

The Parties agree that it is in the best interest of both Parties to attempt to resolve disputes that arise under this PPA in a quick and inexpensive manner. To that end, the Parties commit to

use commercially reasonable efforts to resolve disputes informally. For all disputes that arise under this PPA, the Parties immediately, through their designated representatives, shall negotiate with one another in good faith in order to reach resolution of the dispute. Such negotiation shall commence within five (5) Days of the date of delivery of written notice from one Party to the other Party notifying that Party of the nature of the dispute, including statements describing in detail the issues and claims surrounding such dispute (each, a "***Dispute Notice***"). In the event that the Parties' cannot agree to a resolution of the dispute within thirty (30) Days after delivery of a Dispute Notice, each of the Parties shall submit such dispute to its respective senior officer or official (such senior officer or official to be selected by each of the Party's in their sole discretion, provided such senior officer or official has authority to bind the respective Party). Within five (5) Business Days after submitting such dispute to the senior officers or officials of each Party, the senior officers or officials for both Parties shall meet and negotiate in good faith to resolve the dispute, provided that a failure to deliver a Dispute Notice shall not prejudice either Party's right to submit such dispute to litigation. In the event that the senior officers or officials cannot resolve such dispute within thirty (30) Days after the matter was submitted to them, either Party may seek all legal and equitable remedies. The Parties shall continue to perform each of their respective obligations under this PPA during the pendency of any dispute; *provided*, that this obligation shall not apply after the termination of this PPA (except with respect to payments of amounts due and owing under this PPA).

ARTICLE 15 FORCE MAJEURE

15.1 Definition

15.1.1 Neither Party will be considered to be in default in respect to any obligation hereunder if delays in or failure of performance is due to a Force Majeure Event, except for the obligation to pay monies due. A "***Force Majeure Event***" shall mean (a) any Supply Chain Event arising after the Execution Date, or (b) any event or circumstance that arises after the Execution Date that is beyond the reasonable control of and is not caused by the negligence or lack of due diligence of the affected Party or its contractors or suppliers and that wholly or partly prevents or delays the performance of the affected Party other than any obligations to pay monies due. Force Majeure Events of the type in the foregoing clause (b) may include, but are not limited to: actions or inactions of civil or military authority (including courts and governmental or administrative agencies), acts of God, war, riot or insurrection, terrorism, blockades, embargoes, sabotage (including arson and vandalism), pandemics, epidemics, explosions and fires not originating in the Generating Facility, hurricanes, floods, strikes, lockouts or other labor disputes (not caused by the failure of the affected Party to comply with the terms of a collective bargaining agreement), and any actions or any demonstrable or manifest inactions of a Governmental Authority. Each Party acknowledges the effects of COVID-19 as of the Execution Date, and that no delay or failure in performance is expected based on the scope of such effects as of the Execution Date. Force Majeure relief related to COVID-19 and its effects shall be permitted only to the extent of material direct impacts of COVID-19 of which the Party was not aware, and should not reasonably have

anticipated, as of the Execution Date, and provided that the criteria in the first sentence of this Section 15.1.1 are met.

15.1.2 Equipment breakdown or the inability of Seller to use equipment due to its design, construction, operation, maintenance, or a failure by Seller to obtain on a timely basis and maintain a necessary permit or other regulatory approval shall not be considered a Force Majeure Event, unless Seller can demonstrate that such delays or non-performance were due to circumstances that would constitute a Force Majeure Event.

15.1.3 Notwithstanding the foregoing, the term Force Majeure Event does not include the following, except to the extent constituting or arising from a Supply Chain Event: (i) inability by Seller to procure equipment for the Generating Facility or any component parts therefor, for any reason (the risk of which is assumed by Seller); (ii) any other acts or omissions of any third party acting on behalf of Seller, including any vendor, materialman, customer, or supplier of Seller, unless such acts or omissions are themselves excused by reason of a Force Majeure Event; (iii) any full or partial curtailment in the electric output of the Generating Facility that is caused by or arises from a mechanical or equipment breakdown, or other mishaps, events or conditions, attributable to normal wear and tear except where such event or condition was due to circumstances that would constitute a Force Majeure Event; (iv) changes in market conditions or other events or circumstances that affect the cost of equipment, labor, materials or supplies, or that affect demand for power; or (v) except as set forth in Section 15.1.1, any labor strikes, slowdowns or stoppages, or other labor disruptions against a Party or its contractors or subcontractors.

15.1.4 In no event will any delay or failure of performance caused by a Force Majeure Event extend this PPA beyond the Term. Notwithstanding any other provision in this PPA to the contrary, in the event that any delay or failure of performance caused by a Force Majeure Event affecting Seller continues for an uninterrupted period of three hundred sixty (360) Days from its inception, either Party (or EPE as provided in Section 3.6) may, at any time following the end of such period, terminate this PPA upon written notice to the affected Party, without further obligation by either Party except as to costs and balances incurred prior to the effective date of such termination. Upon any such termination of this PPA, EPE shall promptly, but in no event more than ten (10) Business Days following the date of such termination, return any outstanding Security to Seller.

15.1.5 Except as otherwise provided in this PPA, each Party shall be excused from performance when non-performance was caused, directly or indirectly, by a Force Majeure Event but only and to the extent thereof, and existence of a condition of Force Majeure Event shall not relieve the Parties of certain obligations under this PPA (including payment obligations) to the extent that such performance of such obligations is not precluded by the condition of Force Majeure Event.

15.2 Notification Obligations

In the event of any delay or non-performance resulting from a Force Majeure Event, the Party claiming that a Force Majeure Event has occurred shall notify the other Party, in writing and in accordance with the requirements set forth in Section 14.1, as soon as reasonably practicable, but in no event more than five (5) Business Days after becoming aware of the occurrence of such Force Majeure Event. Any such notice shall include the nature and cause of such Force Majeure Event, the date of commencement thereof, the anticipated duration thereof, and shall indicate whether any deadlines or date(s) imposed hereunder may be affected thereby, in each case to the extent known by Seller at the time such notice is provided. Any suspension of performance by the Party claiming that a Force Majeure Event has occurred shall be of no greater scope and of no greater duration than is necessary. A Party claiming that a Force Majeure Event has occurred shall (a) not be entitled to relief therefor unless and until it has delivered a notice therefor as required in this Section 15.2, and (b) notify the other Party of the cessation of the Force Majeure Event or of the conclusion of the affected Party's cure for the Force Majeure Event, in either case as soon as reasonably practicable.

15.3 Duty to Mitigate

The Party claiming that a Force Majeure Event has occurred shall use its commercially reasonable efforts to cure the event or condition preventing its performance of this PPA and shall keep the other Party reasonably apprised of the status of the Force Majeure Event.

ARTICLE 16 REPRESENTATIONS, WARRANTIES AND COVENANTS

16.1 Seller's Representations, Warranties and Covenants

Seller hereby represents and warrants, with respect to Section 16.1(a) through Section 16.1(h), and covenants, with respect to Section 16.1(i) through 16.1(k), as follows:

(a) Seller is a limited liability company duly organized, validly existing and in good standing under the laws of the State of Delaware. Seller is qualified to do business in each other jurisdiction where the failure to so qualify would have a material adverse effect on the business or financial condition of Seller; and Seller has all requisite power and authority to conduct its business, to own its properties, and to execute, deliver, and perform its obligations under this PPA.

(b) The execution, delivery, and performance of its obligations under this PPA by Seller have been duly authorized by all necessary limited liability company action, and do not and will not:

(1) require any consent or approval by any governing body of Seller, other than that which has been obtained and is in full force and effect;

(2) violate any Applicable Law, or violate any provision in any formation documents of Seller, the violation of which could have a material adverse effect on the ability of Seller to perform its obligations under this PPA;

(3) result in a breach or constitute a default under Seller's formation documents or bylaws, or under any agreement relating to the management or affairs of Seller or any indenture or loan or credit agreement, or any other agreement, lease, or instrument to which Seller is a party or by which Seller or its properties or assets may be bound or affected, the breach or default of which could reasonably be expected to have a material adverse effect on the ability of Seller to perform its obligations under this PPA; or

(4) result in, or require the creation or imposition of any mortgage, deed of trust, pledge, lien, security interest, or other charge or encumbrance of any nature (other than as may be contemplated by this PPA) upon or with respect to any of the assets or properties of Seller now owned or hereafter acquired, the creation or imposition of which could reasonably be expected to have a material adverse effect on the ability of Seller to perform its obligations under this PPA.

(c) Subject to the satisfaction of the conditions precedent set forth in Article 6, the obligations of Seller under this PPA are valid and binding obligations of Seller.

(d) The execution and performance of this PPA will not conflict with or constitute a breach or default under any contract or agreement of any kind to which Seller is a party or any judgment, order, statute, or regulation that is applicable to Seller or the Generating Facility.

(e) To the knowledge of Seller, and except for those permits, consents, approvals, licenses and authorizations identified in Exhibit E, which Seller anticipates will be obtained by Seller in the ordinary course of business, all Governmental Approvals necessary for Seller's execution, delivery and performance of this PPA have been duly obtained and are in full force and effect.

(f) Seller has not sold, delivered or transferred the RECs or Environmental Attributes to any other Person, in whole or in part.

(g) All right, title and interest in and to the RECs and Environmental Attributes are free and clear of any liens, Taxes, claims, security interests or other encumbrances except for any right or interest by any entity claiming through EPE.

(h) Each REC and Environmental Attribute complies with the requirements set forth in the New Mexico Renewable Energy Act, NMSA 1978, § 62-16-1 *et seq*., and Title 17.9.572 NMAC.

(i) Seller shall disclose to EPE the extent of, and as soon as it is known to Seller, any violation of any Applicable Laws arising out of the construction of the Generating Facility, the presence of Environmental Contamination at the Generating Facility (actual or alleged), or the existence of any past or present enforcement, legal, or regulatory action or proceeding relating to such Environmental Contamination.

(j) During the Delivery Term, Seller shall have good and marketable title to the RECs and Environmental Attributes.

(k) Seller shall provide copies to EPE of any amendments to the Interconnection Agreements and the Shared Facilities Agreement.

16.2 EPE's Representations and Warranties

EPE hereby represents and warrants as follows:

(a) EPE is a corporation duly organized, validly existing and in good standing under the laws of the State of Texas and is qualified in each other jurisdiction where the failure to so qualify would have a material adverse effect upon the business or financial condition of EPE. EPE has all requisite power and authority to conduct its business, to own its properties, and to execute, deliver, and perform its obligations under this PPA.

(b) The execution, delivery, and performance of its obligations under this PPA by EPE have been duly authorized by all necessary corporate action, and do not and will not:

(1) require any consent or approval of EPE's shareholders, members, managers and/or directors, except as set forth in Section 6.1(a);

(2) violate any Applicable Law, or violate any provision in any corporate documents of EPE, the violation of which could have a material adverse effect on the ability of EPE to perform its obligations under this PPA;

(3) result in a breach or constitute a default under EPE's corporate charter or bylaws, or under any agreement relating to the management or affairs of EPE, or any indenture or loan or credit agreement, or any other agreement, lease, or instrument to which EPE is a party or by which EPE or its properties or assets may be bound or affected, the breach or default of which could reasonably be expected to have a material adverse effect on the ability of EPE to perform its obligations under this PPA; or

(4) result in, or require the creation or imposition of, any mortgage, deed of trust, pledge, lien, security interest, or other charge or encumbrance of any nature (other than as may be contemplated by this PPA) upon or with respect to any of the assets or properties of EPE now owned or hereafter acquired, the creation or

imposition of which could reasonably be expected to have a material adverse effect on the ability of EPE to perform its obligations under this PPA.

(c) Subject to the satisfaction of the conditions precedent set forth in Article 6, this PPA is a valid and binding obligation of EPE.

(d) The execution and performance of this PPA will not conflict with or constitute a breach or default under any contract or agreement of any kind to which EPE is a party or any judgment, order, statute, or regulation that is applicable to EPE.

(e) To the knowledge of EPE, all required Governmental Approvals necessary for EPE's execution, delivery and performance of this PPA have been duly obtained and are in full force and effect, regardless of whether any approval from NMPRC for the execution and performance of this PPA has been obtained.

ARTICLE 17 INSURANCE

17.1 Evidence of Insurance

Seller shall, at least thirty (30) Days prior to the Commercial Operation Date, and thereafter within thirty (30) Days after the annual insurance policy renewal or update or change of any insurance policy required to be maintained pursuant to this PPA, provide EPE with two (2) copies of insurance certificates evidencing the insurance coverages required to be maintained by Seller in accordance with Exhibit G and this Article 17 along with endorsements required below in Section 17.3, and a list of any other endorsements to the policy that limit the coverage provided by the ISO form with regard to the Generating Facility. All such insurance shall be primary insurance. All policies shall be written with insurers rated at least A- VII by A.M. Best or that EPE, in its reasonable discretion, deems acceptable (such acceptance shall not be unreasonably withheld or delayed by EPE). Seller's liability under this PPA shall not be limited to the amount of insurance coverage required herein.

17.2 Term and Modification of Insurance

17.2.1 Seller may self-insure either all or any portion of the foregoing coverages so long as there is no material decrease in its net worth or means that renders the same insufficient for purposes of self-insurance. If at any time during the Term, EPE, in its reasonable discretion, determines that it will no longer accept self-insurance from Seller, EPE shall provide notice to Seller and Seller shall obtain the insurance coverages required by Exhibit G within sixty (60) Days.

17.2.2 EPE shall have the right, at times deemed appropriate to EPE during the Term, to request Seller to modify the insurance minimum limits specified in Exhibit G in order to maintain reasonable coverage amounts. Seller shall make commercially reasonable efforts to comply with such request.

17.3 Endorsements and Other Requirements

17.3.1 Seller shall provide endorsements evidencing that the insurers shall provide EPE thirty (30) Days' prior written notice of non-renewal or cancellation of insurance (except that such notice shall be ten (10) Days for non-payment of premiums) and endorsements that waive all rights of subrogation against EPE and its Affiliates, officers, directors, agents, subcontractors and employees.

17.3.2 Seller shall provide endorsements providing that the insurance required under this PPA is primary and non-contributory with respect to other insurance carried by EPE.

17.3.3 Seller shall provide endorsements providing that the liability insurance required pursuant to paragraphs (b), (c) and (d) of Exhibit G names EPE and its Affiliates, officers, directors, and employees as additional insureds for both ongoing and completed operations but only to the extent EPE (or other additional insured) is vicariously liable for the negligence, acts or omissions of Seller. The liability insurance required pursuant to paragraphs (b) and (d) of Exhibit G shall include a standard ISO or an equivalent separation of insureds clause and will not include a cross-suit exclusion applicable to claims brought by or against an additional insured.

ARTICLE 18 LEGAL AND REGULATORY COMPLIANCE

18.1 Applicable Laws

Each Party shall at all times comply with all Applicable Laws. Each Party shall promptly notify the other Party of any material investigations, notices of alleged violations or findings of violation of Applicable Law from any Governmental Authority, including any audit, notification, inspection or inquiry that has been commenced by any Governmental Authority in respect of a potential violation of Applicable Law with regard to the Generating Facility or this PPA. Seller shall give all required notices, shall timely procure and maintain all Seller required permits, and shall timely pay all charges and fees in connection therewith. Seller shall make available to EPE, upon reasonable request and at EPE's cost (other than the normal, customary and reasonable costs of Seller), any personnel or records relating to the Generating Facility or this PPA to the extent EPE requires the same to fulfill any regulatory reporting requirements, or for purposes of litigation or regulatory proceedings, including but not limited to, litigation or proceedings before the NMPRC, FERC, or other regulatory bodies. The Parties shall treat information disclosed pursuant to this Section 18.1 in confidence in accordance with Article 24, unless such information is public information.

18.2 Governmental Approvals

Each Party shall timely and lawfully procure and maintain in good standing, at its own cost and expense, all Governmental Approvals and Additional Consents and shall timely and properly

pay its respective charges and fees in connection therewith. EPE, at its sole cost and expense, may seek approval from NMPRC for the execution and performance of this PPA and Seller shall reasonably cooperate with EPE in its efforts to obtain such approval, *provided* that the Parties (i) shall not be obligated to obtain any such approval from NMPRC, (ii) shall be obligated to perform all of their obligations under this PPA regardless of whether NMPRC grants such approval or imposes any conditions in connection with such approval. In connection with any request by EPE for reasonable cooperation of Seller, EPE agrees to reimburse Seller for any external legal or other third-party costs incurred by Seller in connection with such cooperation.

18.3 [Reserved]

18.4 Compliance with Reliability Standards

To the extent that new reliability standards applicable to the operation and maintenance of the Generating Facility are promulgated by the WECC, NERC, FERC, or NMPRC, or any successor agencies, any and all costs incurred as a result of actions required for compliance with the new reliability standards shall be borne by Seller. If Seller fails, through negligent action or negligent inaction, to comply with reliability standards related to the operation and maintenance of the Generating Facility, and the lack of compliance results in monetary penalties being assessed to EPE by WECC, NERC, FERC or any successor agency, then Seller shall reimburse EPE for Seller's share of such monetary penalties resulting directly from Seller's negligent action or inaction. For the avoidance of doubt, Seller's obligations under this Section 18.4 are subject to the terms of Section 22.2, and Seller's liability under or arising out of this Section 18.4 shall not exceed the Compliance Cost Cap; *provided,* that Seller's obligation to reimburse EPE under the second sentence of this Section 18.4 shall not be limited by the Compliance Cost Cap.

18.5 Compliance Information

Each Party shall, for the purpose of gathering information and/or providing oral or written reports, testimony, affidavits or other submissions relevant to any Governmental Approvals, Non-Governmental Compliance Obligations, Additional Consents, Applicable Laws or in connection with any litigation, arbitration or administrative proceeding before any authority of competent jurisdiction: (i) deliver or cause to be delivered to the other Party any necessary or required certificates of its officers, accountants, engineers or agents; and/or (ii) make available necessary personnel with knowledge as to such matters.

ARTICLE 19 ASSIGNMENT AND OTHER TRANSFER RESTRICTIONS

19.1 No Assignment Without Consent

Except as permitted in this Article 19, neither Party shall sell, transfer, or assign this PPA, in whole or in part, and Seller shall not sell, transfer or assign the Generating Facility, in whole or in part, without the prior written consent of the other Party, which consent shall not be

unreasonably withheld, delayed or conditioned and so long as any proposed assignee satisfies the conditions set forth in this Article 19,

19.1.1 EPE's consent shall not be required for: (i) any assignment or transfer of this PPA by Seller to an Affiliate of Seller; (ii) any assignment or transfer of this PPA by Seller to a Person succeeding to all or substantially all of the assets of Seller; or (iii) any assignment or transfer of this PPA by Seller to any Lender in connection with any financing or other financial arrangements and the transactions contemplated thereby; *provided,* that, in the case of any assignment or transfer pursuant to clauses (i) or (ii) of this Section 19.1.1, such assignee (a) shall have agreed in writing to be bound by the terms and conditions hereof and furnished a copy of the assignment or transfer document to EPE; (b) with respect to an assignment or transfer described in clause (ii) above, is a Qualified Operator or retains, prior to the date of such transfer, a Qualified Operator to operate the Generating Facility (or otherwise agrees not to interfere with the existing Qualified Operator for the Generating Facility); and (c) shall have complied with the obligations of the assigning Party to provide Development Security or Delivery Term Security, as applicable, in accordance with Article 20.

19.1.2 Seller's consent shall not be required for any assignment of this PPA by EPE to any Affiliate of EPE; *provided,* that (a) EPE remains jointly and severally liable for all of EPE's obligations hereunder, (b) such assignee shall have agreed in writing to be bound by the terms and conditions hereof and furnished a copy of the assignment or transfer document to Seller, (c) such assignee delivers evidence reasonably satisfactory to Seller that such assignee's creditworthiness is equal to or better than that of EPE, and (d) such assignee delivers evidence reasonably satisfactory to Seller that such assignee will comply with NMPRC regulations and will resell the Energy purchased under this PPA. Notwithstanding anything to the contrary herein, EPE may not assign this PPA to any Person that is an end user of electricity that would purchase Energy to offset its own electric retail service.

19.2 Conditions on Transfers

If the rights and interests of a Party in this PPA shall be sold, transferred or assigned as permitted in this Article 19, and the requirements set forth in this Article 19 are otherwise satisfied, then, except with respect to a sale, transfer or assignment of EPE's interest in this PPA to an Affiliate pursuant to Section 19.1.2, the assigning Party shall be released and discharged from the terms and conditions hereof and each such obligation hereunder from and after such date, and the non-assigning Party shall continue this PPA as if such Person had been named under this PPA; *provided*, *however*, that the assigning Party shall not be released and discharged from and shall remain liable for any and all obligations to the other Party arising or accruing hereunder prior to such assumption.

19.3 Change of Control

Except for a Seller Permitted Transfer, any Change of Control of Seller, whether voluntary or by operation of law, shall require the prior written consent of EPE, which shall not be unreasonably withheld, conditioned, or delayed.

19.4 Transfer Without Consent Is Null and Void

Any Change of Control or sale, transfer, or assignment of any interest in the Generating Facility or in this PPA made without fulfilling the requirements of this PPA shall be null and void and shall constitute an Event of Default pursuant to Article 13.

19.5 Subcontracting

Seller may subcontract its duties or obligations under this PPA without the prior written consent of EPE, provided that no such subcontract shall relieve Seller of any of its duties or obligations under this PPA. All subcontractors required by Applicable Law to be qualified to do business in the State of New Mexico shall be so qualified. Seller shall be solely responsible for the engagement, supervision, and management of any subcontractors.

19.6 Assignment to Lenders

19.6.1 Cooperation. In connection with any assignment of this PPA by Seller to its Lenders, as soon as reasonably practicable after reasonable request from Seller or any Lender, EPE will cooperate reasonably with Seller and Lender to agree upon and enter into a consent and agreement, or, if applicable, an estoppel certificate, an estoppel and consent agreement, or similar instrument, all in a form reasonably acceptable to EPE including exclusions, assumptions and caveats typical for such documents or necessary for the accuracy or delivery thereof, providing for, among other things, (i) an option, but not an obligation, for the Lenders to cure any monetary Event of Default of Seller within thirty (30) Days of the expiration of the cure period provided therefore in Section 13.1 (or if later, thirty (30) Days after delivery by EPE of notice to the Lenders), and cure any non-monetary Event of Default of Seller within sixty (60) Days of the expiration of the cure period provided therefor in Section 13.1 (or if later, sixty (60) Days after delivery by EPE of notice to the Lender), prior to EPE terminating this PPA; (ii) EPE providing written notice to Lenders of any Events of Default of Seller; and (iii) EPE not terminating this PPA if Lenders need to foreclose on the Generating Facility prior to curing any Event of Default of Seller giving rise to such termination, but only to the extent that the period required for such foreclosure and cure does not exceed one hundred eighty (180) Days from receipt by Lenders of written notice of such Event of Default; *provided*, that in all cases, (a) EPE will have no obligation to alter or modify the terms of this PPA or provide any consent or enter into any agreement that has a material adverse effect on EPE, and (b) Seller will be responsible for EPE's reasonable costs (including, but not limited to, attorneys' fees) associated with EPE's review, negotiation, execution and delivery of any documents in connection with this Section 19.6.1. Nothing in this Section 19.6

shall impair EPE's right to receive all of the damages arising out of or relating to Seller's default, including damages accruing prior to termination as set forth in Section 13.3.

19.6.2 Financing Liens. Either Party may, without the other Party's consent, transfer, sell, pledge, encumber or assign this PPA or the revenues or proceeds therefrom in connection with any financing *provided*, that such a collateral assignment by either Party does not place any limitation on the other Party's rights or expand the other Party's liability, risks or obligations under this PPA; and further provided that the assigning Party shall not be relieved of any of its obligations or liability under this PPA and that the Lender in any such collateral assignment acknowledges and agrees that the Generating Facility shall be operated and maintained by a Qualified Operator. Promptly after making any such encumbrance, the assigning Party shall notify the other Party in writing of the name, address, and telephone and facsimile numbers of each Lender, collateral agent or trustee, as applicable, to which such Party's interest under this PPA has been encumbered. Such notice shall include the names of the account managers or other representatives of the Lenders to whom all written and telephonic communications may be addressed. After giving such initial notice, such Party shall promptly give the other Party notice of any change in the information provided in the initial notice or any revised notice.

ARTICLE 20 CREDIT AND SECURITY REQUIREMENTS

20.1 Security

20.1.1 Within thirty (30) Days after satisfaction or waiver by the Parties of the conditions precedent set forth in Section 6.1, and until Security is posted under Section 20.1.2, Seller shall post, at its sole cost and expense, security in an amount equal to the product of:

(a) One Hundred Thousand Dollars ($100,000) per MW multiplied by

(b) the Guaranteed Solar Capacity ("***Development Security***").

20.1.2 Not later than the earlier of (x) the Commercial Operation Date and (y) the Outside Commercial Operation Date, and as a condition thereto, unless this PPA is terminated earlier in accordance with its terms, until but not including the eleventh (11th) anniversary of the Commercial Operation Date, Seller shall post and maintain, at its sole cost and expense, security in an amount equal to

(a) One Hundred Thousand Dollars ($100,000) per MW multiplied by

(b) the Guaranteed Solar Capacity (the "***Delivery Term Security***").

20.1.3 On and after the eleventh (11th) anniversary of the Commercial Operation Date, the Delivery Term Security shall be reduced to an amount equal to the product of:

(a) Sixty Five Thousand Dollars ($65,000) per MW multiplied by

(b) the Guaranteed Solar Capacity.

20.1.4 Upon achievement of the Commercial Operation Date or promptly after EPE terminates this PPA as a result of Seller's failure to achieve Commercial Operation on or before the Outside Commercial Operation Date, EPE will return the Development Security to Seller, less any amounts drawn against the Development Security pursuant to Section 13.10. In the event that no amounts are due and owing by Seller to EPE under this PPA and provided no claims are then outstanding, the Delivery Term Security shall be released to Seller upon the earlier of (i) termination of this PPA in accordance with its terms; and (ii) expiration of the Term.

20.2 Form of Security

20.2.1 The following are deemed acceptable methods for posting Security, which methods may be used in any combination, in the reasonable discretion of EPE; *provided*, that Seller may, without EPE's prior approval, provide a Seller Guaranty from Seller Guarantor to satisfy any of Seller's obligations to post Security under this PPA:

(a) cash,

(b) a Letter of Credit in form reasonably acceptable to EPE issued by a U.S. bank or a U.S. branch of a foreign bank with credit ratings by either S&P or Moody's of at least A- and A3, respectively and at least Ten Billion Dollars ($10,000,000,000) in U.S.-based assets ("***Issuer Minimum Requirements***"),

(c) a Seller Guaranty from Seller Guarantor, or

(d) other security as may be reasonably acceptable to EPE.

20.2.2 If Security is provided in the form of a Seller Guaranty and at any time thereafter there shall occur a Downgrade Event with respect to Seller Guarantor, then EPE may require Seller to post a Letter of Credit or cash in a pledged collateral account in an amount equal to the then-applicable amount of any outstanding Seller Guaranty comprising the Security. Upon receipt of the Letter of Credit or cash, the Seller Guaranty shall be returned promptly to Seller. Notwithstanding the foregoing, Seller's obligation to provide a Letter of Credit in lieu of a Seller Guaranty under this Section 20.2 shall be suspended during any period that (x) Seller Guarantor is no longer experiencing a Downgrade Event and (y) the Seller Guaranty is reinstated by Seller Guarantor in accordance with the requirements of this Section 20.2.

20.2.3 Any Letter of Credit provided hereunder shall be renewed by Seller for successive one-year or shorter periods. If EPE receives notice from the issuing bank that the Letter of Credit will not be extended, Seller must provide a substitute Letter of Credit from an alternative bank satisfying the Issuer Minimum Requirements or alternative acceptable Security. The receipt

of the substitute Letter of Credit or other acceptable Security must be effective on or before the expiration date of the expiring Letter of Credit and delivered to EPE at least thirty (30) Days before the expiration date of the original Letter of Credit. If Seller fails to supply a substitute Letter of Credit or other acceptable Security as required, then EPE will have the right to draw on the total amount of the expiring Letter of Credit. If (a) the credit rating of the issuer bank of a Letter of Credit falls below the Issuer Minimum Requirements, (b) the issuer bank fails to honor a properly documented request to draw on such Letter of Credit or disaffirms, disclaims, repudiates or rejects, in whole or in part, or challenges the validity of, such Letter of Credit, or (c) the issuer of the outstanding Letter of Credit fails to comply with or perform its obligations under such Letter of Credit and such failure shall be continuing after the lapse of any applicable grace period permitted under such Letter of Credit, then Seller shall have thirty (30) Days (or such longer period as EPE in its sole discretion may permit in writing) following written notice from EPE to obtain a suitable Letter of Credit from another bank that meets the Issuer Minimum Requirements. EPE shall not be required to post security.

20.3 Grant of Security Interest

To the extent that Seller posts cash to secure its obligations under this PPA, Seller hereby grants to EPE a present and continuing security interest in, and lien on (and right of setoff against), and collateral assignment of, all cash collateral provided by Seller to EPE as collateral and any and all proceeds resulting therefrom or the liquidation thereof, whether now or hereafter held by, on behalf of, or for the benefit of EPE. Seller agrees to take such action as reasonably required to perfect in favor of EPE a first priority security interest in, and lien on (and right of setoff against), such collateral and any and all proceeds resulting therefrom or from the liquidation thereof.

20.4 Use of Security

In addition to any other remedy available to it, EPE in its sole discretion may draw from, offset against or make demand under such Security to recover any amounts owing to it arising out of this PPA, including any damages due to EPE and any amount for which EPE is entitled to indemnification under this PPA. EPE may draw from, offset against or make demand under all or any part of the amounts due to it from any form of Security provided to EPE and from all such forms, in any sequence and at any time before or after termination of this PPA, as EPE may select until such time as the Security is exhausted.

ARTICLE 21 INDEMNITY; INSURANCE PROCEEDS

21.1 Indemnification

21.1.1 Subject to the provisions of Article 13, and to the fullest extent permitted by law, Seller shall defend, save harmless and indemnify EPE, its Affiliates, and their respective directors, officers, employees, agents, and subcontractors, from and against all third party claims, demands,

losses, liabilities and expenses, including reasonable attorneys' fees, for personal injury, death or damage to real property and tangible personal property of any third party (collectively, "***Losses***") to the extent arising out of, resulting from, or caused by the negligence or willful misconduct of Seller, its Affiliates, directors, officers, employees, agents, or subcontractors; *provided*, that the waiver of consequential damages set forth in Section 13.7 shall not apply with respect to claims made by third parties.

21.1.2 Subject to the provisions of Article 13, and to the fullest extent permitted by law, EPE shall defend, save harmless and indemnify Seller, its Affiliates, and their respective directors, officers, employees, agents, and subcontractors, from and against all Losses to the extent arising out of, resulting from, or caused by the negligence or willful misconduct of EPE, its Affiliates, directors, officers, employees, agents, or subcontractors; *provided*, that the waiver of consequential damages set forth in Section 13.7 shall not apply with respect to claims made by third parties.

21.1.3 The indemnification obligations set forth in Sections 21.1.1 and 21.1.2 will apply notwithstanding any negligent or intentional acts, errors or omissions of the indemnitee but the indemnitor's liability to pay Losses to the indemnitee will be reduced in proportion to the percentage by which the indemnitee's negligent or intentional acts, errors or omissions caused the Losses. Neither Party may be indemnified for its Losses resulting from its sole negligence or willful misconduct.

21.2 Notice of Claims; Procedure

The indemnitee shall, with reasonable promptness after obtaining knowledge thereof, provide the indemnitor with written notice of the proceedings, claims, demands or assessments that may be subject to indemnification, which notice shall include a statement of the basis of the claim for indemnification, including a summary of the facts or circumstances that form the basis for the claim, a good faith estimate of the amount of Losses and copies of any pleadings or demands from the third party. Indemnitor shall have thirty (30) Days after its receipt of the claim notice to notify indemnitee in writing whether or not indemnitor agrees that the claim is subject to this Article 21 and, if so, whether indemnitor elects to undertake, conduct and control, through counsel of its choosing acceptable to indemnitee and at indemnitor's sole risk and expense, the settlement or defense of the claim. If within thirty (30) Days after its receipt of the claim notice, indemnitor notifies indemnitee that it elects to undertake the settlement or defense of the claim, indemnitee shall cooperate with indemnitor in connection therewith including by making available to indemnitor all relevant information and the testimony of employees and agents material to the defense of the claim. Indemnitor shall reimburse indemnitee for reasonable out-of-pocket costs incurred in connection with such cooperation. So long as indemnitor is contesting the claim in good faith and with diligence, indemnitee shall not pay or settle the claim. Notwithstanding the foregoing, indemnitee shall have the right to pay or settle any claim at any time without the consent of indemnitor; *provided*, that in such event it waives any right to indemnification therefor. If indemnitor does not provide a responsive notice within the thirty (30) Day period set forth in this

Section 21.2, or otherwise fails to assume or diligently prosecute the defense of any claim in accordance with this Section 21.2, the indemnitee shall have the absolute right to control the defense of such claim, and the fees and expenses of such defense, including reasonable attorneys' fees of the indemnitee's counsel and any amount determined to be owed by the indemnitee pursuant to such claim shall be borne by the indemnitor; *provided*, that the indemnitor shall be entitled, at its sole expense, to participate in (but not control) such defense. Subject to the foregoing, (a) the indemnitor shall control the settlement of all claims as required under the insurance policies set forth in Article 17, as applicable, as to which it has assured the defense; *provided*, *however*, that (i) such settlement shall include dismissal with prejudice of the claim and an explicit and unconditional release from all indemnitees; and (ii) the indemnitor shall not conclude any settlement without the prior approval of the indemnitee, which approval shall not be unreasonably withheld, conditioned or delayed; and (b) except as provided in the preceding sentence concerning the indemnitor's failure to assume or to diligently prosecute the defense of any claim, no indemnitee seeking reimbursement pursuant to the foregoing indemnity shall, without the prior written consent of the indemnitor, settle, compromise, consent to the entry of any judgment or otherwise seek to terminate any action, claim suit, investigation or proceeding for which indemnity is afforded hereunder unless the indemnitee waives any right to indemnification therefor or reasonably believes that the matter in question involves potential criminal liability.

21.3 Survival of Obligations

Cancellation, expiration, or earlier termination of this PPA shall not relieve the Parties of obligations that by their nature should survive such cancellation, expiration, or termination, prior to the term of the applicable statute of limitations, including each Party's indemnity obligations which shall survive for the period of the applicable statute(s) of limitation.

21.4 Insurance Proceeds

In the event that an indemnifying Party is obligated to indemnify the indemnified Party under this Article 21, the amount owing to the indemnified Party will be the amount of the indemnified Party's Loss net of any insurance proceeds received by the indemnified Party following a reasonable effort by such Party to obtain such insurance proceeds.

ARTICLE 22 ALLOCATION OF GOVERNMENTAL CHARGES

22.1 Governmental Charges

Seller shall pay or cause to be paid to the applicable Governmental Authority all Governmental Charges on or with respect to the Generating Facility or on or with respect to the sale and making available to EPE of Energy Output that are imposed on the making available of Energy Output arising prior to the Point of Delivery or prior to the transfer of the Environmental Attributes pursuant to Article 11. EPE shall pay or cause to be paid to the applicable Governmental

Authority all Governmental Charges (other than any Governmental Charges for which Seller is liable under this Article 22) on or with respect to the taking and purchase by EPE of Energy Output that are imposed at and from the taking of Energy Output by EPE at the Point of Delivery or at and after the transfer of the Environmental Attributes pursuant to Article 11. If a Party is required under Applicable Law to remit or pay Governmental Charges that are the other Party's responsibility hereunder, such Party shall promptly reimburse the other for such Governmental Charges. Both Parties shall use reasonable efforts to administer this PPA and implement the provisions in accordance with their intent to minimize Governmental Charges, so long as no Party is materially adversely affected by such efforts. Nothing herein shall obligate or cause a Party to pay or be liable to pay any Governmental Charge for which it is exempt under Applicable Law. In the event any sale of Energy Output hereunder is exempt from or not subject to any particular Governmental Charge, EPE shall provide Seller with all reasonably requested documentation within thirty (30) Days after requested by Seller to evidence such exemption or exclusion.

22.2 Compliance Actions

22.2.1 Notwithstanding any other provision of this PPA, to the extent a change in any Applicable Law occurs after the Execution Date which increases Seller's costs above the cost that could reasonably have been contemplated as of the Execution Date to take all actions ("***Compliance Actions***") to comply with Seller's obligations under this PPA, the Parties agree that (a) the maximum amount of costs and expenses Seller shall be required to incur in each calendar year during the Term in order to overcome the effects of such change in Applicable Law on Seller's ability to fulfill its obligations under this PPA ("***Seller Compliance Costs***") shall be capped at Ten Thousand Dollars ($10,000) per MW of Installed Solar Capacity, and (b) the maximum amount of Seller Compliance Costs Seller shall be required to incur over the Term shall be capped at Twenty Thousand Dollars ($20,000) per MW of Installed Solar Capacity ((a) and (b) individually and collectively, the "***Compliance Cost Cap***").

22.2.2 In the event that Seller anticipates the need to incur any Seller Compliance Costs in excess of the Compliance Cost Cap, Seller will notify EPE of such anticipated Seller Compliance Costs, with supporting information that reasonably demonstrates the nature and level of such costs. EPE will have sixty (60) Days from receipt of such notice to evaluate such notice, and will, by the end of such period, (a) agree to reimburse Seller for all such Seller Compliance Costs that Seller actually incurs in excess of the Compliance Cost Cap ("***Agreed Compliance Costs***"), (b) agree and execute with Seller an amendment to this PPA which reflects a mutually agreed increase to the Solar Energy Output Payment Rate for the remainder of the Term that would compensate Seller for all such excess Seller Compliance Costs, or (c) waive Seller's obligation to take any and all such actions. If EPE does not respond to a notice given by Seller under this Section 22.2.2 within sixty (60) Days after EPE's receipt of such notice, EPE shall be deemed to have waived its rights to require Seller to take the Compliance Actions that are the subject of the notice, and Seller shall have no further obligation to take, and no liability for any failure to take, these Compliance Actions for the remainder of the Delivery Term. In the event EPE agrees to

reimburse Seller pursuant to clause (a) in the foregoing sentence, then Seller will take such actions for which EPE has agreed to reimburse Seller the Agreed Compliance Costs, and EPE will pay to Seller the Agreed Compliance Costs within ten (10) Business Days of receipt of invoice thereof issued by Seller. To the extent that EPE has not paid Seller for any Agreed Compliance Costs, Seller will not be in default under this PPA for failure to satisfy any obligation under this PPA, Applicable Law or other requirement related to such change in Applicable Law.

22.2.3 If (a) EPE agrees to reimburse Seller for the Agreed Compliance Costs, (b) the Parties execute an amendment to this PPA increasing the Solar Energy Output Payment Rate, (c) EPE waives Seller's obligation to take Compliance Actions, or (d) EPE is deemed to have waived Seller's obligation to take such Compliance Actions in accordance with Section 22.2.2, then (i) Seller will be deemed not to be in breach or default of this PPA, and (ii) payments to Seller under this PPA shall not be reduced, and EPE shall continue to pay Seller as if such change in Applicable Law did not occur; *provided, however*, that if Energy Output from the Generating Facility is reduced or stopped as a result of Seller not taking Compliance Actions, EPE shall have no obligation to pay Seller for any quantities not generated and/or delivered to the Point of Delivery as a result of Seller not taking Compliance Actions; *provided*, *further*, that if EPE reasonably disputes whether Seller's anticipated Seller Compliance Costs exceed the Compliance Cost Cap, then EPE may submit such dispute to a mutually selected technical expert or arbitrator within thirty (30) days following EPE's receipt of Seller's notice, and the Parties shall in good faith resolve such dispute in compliance with the protocols employed by such mutually selected technical expert or arbitrator.

22.2.4 Notwithstanding anything to the contrary herein regarding the compliance cost obligations and liabilities of Seller set forth in Article 18 and Article 22, only such compliance costs and liabilities set forth in Article 18 and Article 22 shall be subject to the Compliance Cost Cap set forth in Section 22.2.1.

ARTICLE 23 INCORPORATION OF FEDERAL LAWS

23.1 EEO and Notice of Labor Rights

Seller and Seller's contractors and subcontractors, shall, to the extent applicable, abide by (i) the requirements of 41 CFR §§ 60-1.4(a), 60-4.3, 60-300.5(a), and 60-741.5(a), which prohibit discrimination against qualified individuals based on their status as protected veterans or individuals with disabilities, prohibit discrimination against all individuals based on their race, color, religion, sex, sexual orientation, gender identity, or national origin, and require affirmative action to employ and advance in employment individuals without regard to race, color, religion, sex, sexual orientation, gender identity, national origin, protected veteran status, or disability; (ii) 29 CFR Part 471, Appendix A to Subpart A; and (iii) E-Verify.

23.2 EEO Reporting

If Seller or any of Seller's contractors or subcontractors is required by federal regulations to file Employer Information Report EEO-1 (standard form 100) or Federal Contractor Veterans' Employment Report VETS-4212, Seller certifies that it has done so or cause such Person to do so or will file such reports or will cause such Person to file such reports in accordance with applicable instructions and will continue to file such reports unless or until no longer required by Applicable Law.

23.3 [Reserved]

23.4 Anti-Corruption Laws

The Parties to this PPA are committed to complying with Applicable Law. Accordingly, each Party hereto hereby represents, warrants and covenants that:

(a) In connection with the transactions contemplated by this PPA, neither such Party nor its Affiliates nor its or their respective officers or directors is, nor, to the knowledge of such Party, its employees or agents, has violated or is in violation of any provision of the Foreign Corrupt Practices Act or any applicable anti-corruption or anti-bribery law (collectively, "***Anti-Corruption Laws***");

(b) Such Party has recorded, and will continue to properly and accurately record, in its books and records, all of its business-related transactions in all material respects, and each document upon which entries in such Parties' books and records are based has been and is complete and accurate in all material respects;

(c) Such Party, its Affiliates and its and their respective officers and directors and, to the knowledge of such Party, its employees and agents, has been and is now in material compliance with the Applicable Laws required for its performance under this PPA as well as Anti-Corruption Laws and will remain in material compliance with all such Applicable Laws during the Term;

(d) In connection with the transactions contemplated by this PPA, such Party, its Affiliates, and its and their respective officers and directors and, to the knowledge of such Party, its employees and agents, has not taken and will not take any actions in furtherance of an offer, payment, promise to pay, or authorization of the payment or giving of, or a request or acceptance of, money, or anything else of value, to any government official (including any officer or employee of a foreign government or government-controlled entity or of a public international organization, or any person acting in an official or representative capacity for or on behalf of any of the foregoing, or any political party or official thereof, or candidate for political office, or legislative, administrative or judicial officials whether or not elected or appointed, all of the foregoing being referred to as "***Government Officials***") or to any other Person while knowing, or having reason to know, that all or some portion of the money or value will be offered, given or promised to a

Government Official for the purposes of obtaining or retaining business, obtaining an advantage in the conduct of business or securing any improper disadvantage in respect of another Person, in each case in violation of any applicable Anti-Corruption Law;

(e) In connection with the transactions contemplated by this PPA, such Party, its Affiliates and its and their respective officers and directors and, to the knowledge of such Party, its employees and agents, has not taken and will not take any actions in furtherance of an offer, payment, promise to pay or authorization of the payment or giving of, or a request or acceptance of, money or anything else of value, to or by any other Person (whether or not a Government Official) while knowing, or having reason to know, that all or some portion of the money or value offered, given or promised to such other Person is for the purpose of securing the improper performance of that Person's function or misuse of that Person's position, in each case in violation of any applicable Anti-Corruption Law; and

(f) No part of the payments received by a Party under this PPA, directly or indirectly, from the other Party will be used for any purpose which would cause a violation of the laws of the United States or any other applicable jurisdiction including any applicable Anti-Corruption Laws.

Either Party may terminate this PPA in accordance with Section 13.1.4(b) in the event that the other Party materially breaches any representation or warranty set forth in this Section 23.4.

ARTICLE 24 CONFIDENTIALITY

24.1 Definition of Confidential Information

Except as otherwise set forth in this Section 24.1, the following constitutes "***Confidential Information***," whether oral or written which is delivered by Seller to EPE or by EPE to Seller including:

(a) all oral, written, or visual information (including any combination thereof) communicated, transmitted, or otherwise disclosed by the disclosing Party (the "***Disclosing Party***"), its officers, employees, and/or agents (acting in such capacity) to the receiving Party (the "***Receiving Party***"), its employees and/or agents in connection with this PPA,

(b) the existence and terms of this PPA and all data, reports, records, agenda, compilations, analyses, test results, photographs, drawings, blueprints, schematics, computer files, and screens, and all software licenses, software services agreements, and software development agreements, and all software programs and documentation licensed by the Disclosing Party and written and/or oral descriptions of the functionality of such programs, and

(c) non-public information of EPE that under Applicable Law is designed to protect the electrical grid of the United States and the cyber systems related to EPE's role as a public utility service provider and owner and operator of grid assets, including

(1) all information pertaining to systems defined as "cyber assets" and "bulk electric system (BES) cyber systems" under the Critical Infrastructure Protection (CIP) Standards or other standards promulgated by the North American Electric Reliability Corporation (NERC), together with all security measures to protect such critical cyber assets and systems,

(2) all "BES cyber security information" (BCSI) pertaining to any "BES cyber system" as such terms are defined in the CIP Standards or other standards promulgated by NERC, and

(3) all "critical energy/electric infrastructure information" (CEII) and other information concerning "critical infrastructure" as such terms are defined by the Federal Energy Regulatory Commission pursuant to 18 C.F.R. § 388.113(c) as may be amended or re-codified.

Confidential Information does not include (i) information that was publicly available at the time of the disclosure, other than as a result of a disclosure in breach of this PPA; (ii) information that becomes publicly available through no fault of the recipient after the time of the delivery; (iii) information that was rightfully in the possession of the recipient (without confidential or proprietary restriction) at the time of delivery or that becomes available to the recipient from a source not subject to any restriction against disclosing such information to the recipient;(iv) information that the recipient independently developed without a violation of this PPA; (v) information that was previously known by the recipient without any obligation to hold it in confidence; and (vi) information that the providing Party approves for release to the general public in writing.

24.2 Duty to Maintain Confidentiality

24.2.1 Confidential Information will retain its character as Confidential Information but may be disclosed by the Receiving Party if and to the extent such disclosure is required (a) to be made by any requirements of Applicable Law, (b) pursuant to an order of a court, or (c) in order to enforce this PPA. If the Receiving Party becomes legally compelled (by interrogatories, data requests, requests for information or documents, subpoenas, summons, civil investigative demands, or similar processes or otherwise in connection with any litigation or to comply with any Applicable Law, order, regulation, ruling, regulatory request, accounting disclosure rule or standard or any request by or rule of any Governmental Authority (including any applicable RTO or ISO), exchange, or control area) to disclose any Confidential Information of the Disclosing Party, the Receiving Party shall provide Disclosing Party with prompt notice so that the Disclosing Party, at its sole expense, may seek an appropriate protective order or other appropriate remedy. If the Disclosing Party takes no such action after receiving the foregoing notice from the Receiving

Party, the Receiving Party is not required to defend against such request and shall be permitted to disclose such Confidential Information of the Disclosing Party, with no liability for any damages that arise from such disclosure. Notwithstanding anything to the contrary in this PPA, EPE shall be entitled to disclose to any Governmental Authority as a matter of right, without seeking any confidential treatment therefor, Seller's name, the Delivery Term, the type, nature, and a general description of the transaction, and amount and type of capacity under contract pursuant to this PPA. Notwithstanding the foregoing, Seller acknowledges and agrees that EPE may disclose this PPA and related documents, without seeking a protective order or similar process, in any proceeding before the NMPRC or pursuant to any other regulatory process under NMPRC jurisdiction; *provided*, that the Solar Energy Output Payment Rate shall be redacted to the extent allowed by Applicable Law.

24.2.2 Subject to the remainder of this Article 24, the Receiving Party shall use its best efforts and shall take all reasonable steps necessary to ensure that Confidential Information is not disclosed, communicated, or transmitted to any Person other than (a) the Receiving Party's parents, Affiliates, counsel, contractors, directors, officers, employees, advisors, or agents (acting in such capacity) and (b) in the case of Seller, any purchasers, potential purchasers, bidders, and potential bidders of direct or indirect interests in the Generating Facility (including direct or indirect interests in the equity interests of Seller) (collectively "***Receiving Party Representatives***") who have a need to review or know such Confidential Information and who are informed of the confidential nature of the Confidential Information and agree in writing to be bound by the terms of this Article 24. Provided that Confidential Information is not disclosed by, or on behalf of, the Receiving Party to a (i) J.P. Morgan Chase & Co. (together with its affiliates, "***J.P. Morgan***") business group other than J.P. Morgan Asset Management's Alternatives-Infrastructure Investments Group, no such other business group(s) shall be deemed to be a recipient of Confidential Information, and (ii) fund, investment vehicle, or separate account that is sponsored, advised, and/or managed by J.P. Morgan Investment Management Inc. and/or its affiliates, no such fund, investment vehicle, or separate account shall be deemed to be a recipient of Confidential Information. The Receiving Party shall be responsible for any breach of this Article 24 by the Receiving Party or Receiving Party Representatives.

24.3 Irreparable Injury; Remedies

The Receiving Party acknowledges that its obligations under this PPA are necessary and reasonable in order to protect the Disclosing Party and the business of the Disclosing Party, and expressly acknowledges that monetary damages would be inadequate to compensate the Disclosing Party for any breach or threatened breach by the Receiving Party of any covenants and agreements set forth in this Article 24. Accordingly, the Receiving Party acknowledges that any such breach or threatened breach will cause irreparable injury to the Disclosing Party and that, in addition to any other remedies that may be available, in law, in equity or otherwise, the Disclosing Party will be entitled to obtain injunctive relief against the threatened breach of this Article 24 or the continuation of any such breach, without the necessity of proving actual damages.

24.4 Disclosure by Seller to Lenders, Etc.

Notwithstanding anything to the contrary in this Article 24, Confidential Information may be disclosed by Seller to any actual or potential Lender or investor or any of their Affiliates, and Seller's actual or potential agents, consultants, contractors, or trustees, so long as the Person to whom Confidential Information is disclosed agrees in writing to be bound by the confidentiality provisions of this Article 24 to the same extent as if it were a Party.

24.5 Disclosure by EPE to Examiners, Etc.

Notwithstanding anything to the contrary in this Article 24, Confidential Information may be disclosed by EPE to a bank examiner, regulatory examiner, or self-regulatory examiner in the course of such examiner's examination, inspection, or audit that is not focused on EPE, Seller, or this PPA.

ARTICLE 25 MISCELLANEOUS

25.1 Waiver

Subject to the provisions of Section 14.8, the failure of either Party to enforce or insist upon compliance with or strict performance of any of the terms or conditions of this PPA, or to take advantage of any of its rights thereunder, shall not constitute a waiver or relinquishment of any such terms, conditions, or rights, but the same shall be and remain at all times in full force and effect.

25.2 Fines and Penalties

Seller shall pay when due all fees, fines, penalties or costs incurred by Seller or its agents, employees or contractors for noncompliance by Seller, its employees, or subcontractors with any provision of this PPA, or any contractual obligation, permit or requirements of law except for such fines, penalties and costs that are being actively contested in good faith and with due diligence by Seller and for which adequate financial reserves have been set aside to pay such fines, penalties or costs in the event of an adverse determination. EPE shall pay when due all fees, fines, penalties or costs incurred by EPE or its agents, employees or contractors for noncompliance by EPE, its employees, or subcontractors with any provision of this PPA, or any contractual obligation, permit or requirements of law except for such fines, penalties and costs that are being actively contested in good faith and with due diligence by EPE.

25.3 Rate Changes

25.3.1 The terms and conditions and the rates for service specified in this PPA shall remain in effect for the term of the transaction described herein. Absent the Parties' written

agreement, this PPA shall not be subject to change by application of either Party pursuant to Section 205 or 206 of the Federal Power Act.

25.3.2 Absent the agreement of all Parties to the proposed change, the standard of review for changes to this PPA whether proposed by a Party, a non-party, or the Federal Energy Regulatory Commission acting sua sponte shall be the "public interest" standard of review set forth in *United Gas Pipe Line v. Mobile Gas Service Corp.*, 350 U.S. 332 (1956) and *Federal Power Commission v. Sierra Pacific Power Co.*, 350 U.S. 348 (1956).

25.4 Disclaimer of Certain Third Party Beneficiary Rights

In executing this PPA, EPE does not, nor should it be construed to, extend its credit or financial support for the benefit of any third parties lending money to or having other transactions with Seller. Nothing in this PPA shall be construed to create any duty to, or standard of care with reference to, or any liability to, any Person not a party to this PPA.

25.5 Relationship of the Parties

25.5.1 This PPA shall not be interpreted to create an association, joint venture, or partnership between the Parties nor to impose any partnership obligation or liability upon either Party. Neither Party shall have any right, power, or authority to enter into any agreement or undertaking for, or act on behalf of, or to act as an agent or representative of, the other Party.

25.5.2 Seller shall be solely liable for the payment of all wages, Taxes, and other costs related to the employment of Persons to perform services for Seller, including all federal, state, and local income, social security, payroll, and employment taxes and statutorily mandated workers' compensation coverage. None of the Persons employed by Seller shall be considered employees of EPE for any purpose; nor shall Seller represent to any Person that he or she is or shall become an EPE employee.

25.6 Equal Employment Opportunity Compliance Certification

Seller acknowledges that, as a government contractor, EPE is subject to various federal laws, executive orders, and regulations regarding equal employment opportunity and affirmative action. These laws may also be applicable to Seller as a subcontractor to EPE. To the extent such laws are applicable to Seller, all applicable equal opportunity and affirmative action clauses shall be deemed to be incorporated herein as required by federal laws, executive orders, and regulations, including 41 C.F.R. § 60-1.4(a)(1)-(7).

25.7 Survival of Obligations

Cancellation, expiration, or earlier termination of this PPA shall not relieve the Parties of obligations that by their nature should survive such cancellation, expiration, or termination, prior

to the term of the applicable statute of limitations, including warranties, and remedies which obligation shall survive for the period of the applicable statute(s) of limitation.

25.8 Severability

In the event any of the terms, covenants, or conditions of this PPA, its Exhibits or Schedules, or the application of any such terms, covenants, or conditions, shall be held invalid, illegal, or unenforceable by any court or administrative body having jurisdiction, all other terms, covenants, and conditions of this PPA and their application not adversely affected thereby shall remain in force and effect; *provided*, *however*, that EPE and Seller shall negotiate in good faith to attempt to implement an equitable adjustment in the provisions of this PPA with a view toward effecting the purposes of this PPA by replacing the provision that is held invalid, illegal, or unenforceable with a valid provision the economic effect of which comes as close as possible to that of the provision that has been found to be invalid, illegal or unenforceable.

25.9 Service Contract

The Parties intend this PPA to be a "service contract" within the meaning of Section 7701(e)(3) of the Code.

25.10 Complete Agreement; Amendments

The terms and provisions contained in this PPA constitute the entire agreement between EPE and Seller with respect to the Generating Facility and shall supersede all previous communications, representations, or agreements, either oral or written, between EPE and Seller with respect to the sale of Energy Output from the Generating Facility. Subject to approval by any Governmental Authority with jurisdiction over this PPA, this PPA may be amended, changed, modified, or altered, provided that such amendment, change, modification, or alteration shall be in writing and signed by both Parties hereto, and provided, further, that the Exhibits and Schedules attached hereto may be changed according to the provisions of Section 14.7.

25.11 Binding Effect

This PPA, as it may be amended from time to time pursuant to Section 25.10, shall be binding upon and inure to the benefit of the Parties hereto and their respective successors-in-interest, legal representatives, and assigns permitted hereunder.

25.12 Headings

Captions and headings used in this PPA are for ease of reference only and do not constitute a part of this PPA.

25.13 Counterparts

This PPA or any supplement, modification, amendment or restatement hereof may be executed in two or more counterpart copies of the entire document or of signature pages to the document, each of which may have been executed by one or more of the signatories hereto and thereto and deliveries by mail, courier, telecopy or other electronic means, but all of which taken together shall constitute a single agreement, and each executed counterpart shall have the same force and effect as an original instrument.

25.14 Governing Law

The interpretation and performance of this PPA and each of its provisions shall be governed and construed in accordance with the laws of the State of Texas, notwithstanding its conflict of laws rules or any principles that would trigger the application of any other law. All disputes arising out of or related to this PPA shall be brought in the state or federal courts located in El Paso, Texas.

25.15 Press Releases and Media Contact

Upon the request of either Party, the Parties shall develop a mutually agreed joint press release to be issued describing the location, size, type and timing of the Generating Facility, the long-term nature of this PPA, and other relevant factual information about the relationship between the Parties. In the event that, during the Term, either Party is contacted by a representative from any media outlet concerning this PPA, the contacted Party shall inform the other Party of the existence of the inquiry, and the Parties shall jointly agree upon the substance of any information to be provided to such media outlet.

25.16 Forward Contract Merchants

Notwithstanding any other provision of this PPA, the Parties acknowledge and agree that Seller and EPE are "forward contract merchants" and all payments under this PPA are "transfers" or "settlement payments", in each case within the meaning of the Bankruptcy Code. Accordingly, the Parties are entitled to the rights under, and the protections afforded by, Sections 362, 546, 556, 560, and 561 of the Bankruptcy Code.

25.17 Accounting Matters

The Parties agree that Generally Accepted Accounting Principles in the United States of America ("***GAAP***") and the rules of the United States Securities and Exchange Commission ("***SEC***") require EPE to evaluate if EPE must consolidate Seller's financial information. The Parties shall determine, through consultation with their respective independent registered public accounting firms, whether this PPA (i) will be considered a lease under Accounting Standards Codification 842 - Leases, or (ii) require consolidation of Seller's financial information with EPE's financial statements pursuant to Accounting Standards Codification 810 - Consolidation (including any subsequent amendments to these sections or future guidance issued by accounting

profession governance bodies or SEC that affects EPE's accounting treatment for this PPA, jointly the "***Accounting Standards***"). Seller agrees to provide EPE with information EPE reasonably believes is necessary for EPE to make the foregoing determinations. If, as a result of the Parties' review (or subsequent reviews as EPE deems necessary), and consultations with their respective independent registered public accounting firms, EPE, in its reasonable discretion, determines that such consolidation is required for a given period, then the Parties agree to the following provisions for such period:

(a) Within fifteen (15) Days following the end of each calendar quarter, including the fourth quarter of the calendar year, Seller shall deliver to EPE: (i) an unaudited year-to-date statement of income, (ii) an unaudited year-to-date statement of cash flows, (iii) an unaudited balance sheet as of the end of such calendar quarter, and (iv) related supporting schedules that are prepared by the Seller's Guarantor, or if Seller has not provided a Seller Guaranty to satisfy its Security requirements pursuant to Article 20, then Seller, in order to allow the Seller's parent to complete its quarterly filings with the SEC, shall deliver to EPE any other information reasonably requested by EPE to comply with the consolidation requirements of GAAP. If audited financial statements are deemed necessary by EPEs external auditors to complete an audit of EPE's consolidated financial statements, EPE agrees to provide notice to Seller no later than sixty (60) Days before the end of the calendar year, and Seller agrees to provide audited financial statements within forty-five (45) Days of each calendar year end thereafter.

(b) The financial statements to be delivered by Seller in accordance with Section 25.17(a) ("***Seller's Financial Statements***") shall be prepared in accordance with GAAP and fairly present in all material respects the consolidated financial position, results of operations, and cash flows of Seller Guarantor, or Seller, as applicable. Seller shall maintain a system of internal accounting controls sufficient to provide reasonable assurance that the financial statements of Seller or Seller Guarantor, as applicable, are prepared in conformity with GAAP. If audited financial statements are prepared for the Seller, other than to satisfy the requirements for financial statements set forth in Section 25.17(a), Seller shall provide such statements to EPE within five (5) Business Days after those statements are issued.

(c) Upon reasonable notice from EPE, during normal business hours and mutually agreed terms and dates, Seller shall allow EPE access to Seller's records and personnel, so that EPE and EPE's independent registered public accounting firm can conduct financial statement reviews and audits in accordance with the standards of the Public Company Accounting Oversight Board (United States). All reasonable expenses for the foregoing that are incremental to Seller's normal operating expenses shall be borne by EPE.

(d) Once during each calendar quarter, EPE and Seller shall meet (either in person or by conference call) at a mutually agreed upon date and time to conduct due diligence and Form 8-K disclosure review and discuss Seller's internal control over financial reporting.

(e) EPE shall treat Seller's Financial Statements or other financial information provided under the terms of this Section 25.17 in confidence in accordance with Article 24 and, accordingly, shall: (i) utilize such Seller financial information only for purposes of preparing, reviewing, auditing or certifying EPE's or any Affiliate's financial statements (including any required disclosures in the financial statement presentation and notes), for making regulatory, tax or other filings required by Applicable Law in which EPE is required to demonstrate or certify its or any Affiliate's financial condition or to obtain credit ratings; (ii) make such Seller financial information available only to its or its Affiliates' officers, directors, employees or auditors who are responsible for preparing, reviewing, auditing or certifying EPE's or any Affiliate's financial statements, to the SEC and the Public Company Accounting Oversight Board (United States) in connection with any oversight of EPE's or any Affiliate's financial statements and to those Persons who are entitled to receive Confidential Information in accordance with Article 24; (iii) not disclose any of Seller's financial information provided under the terms of this Section 25.17 to the extent that such information is not required by the Accounting Standards or Applicable Law; (iv) limit submission of Seller's financial information provided under the terms of this Section 25.17 to that information that reflects Seller's operations of the Generating Facility, provided such limited submission is not contrary to the Accounting Standards or other Applicable Law; and (v) use reasonable efforts to disclose to and consult with Seller with respect to any information respecting Seller or the Generating Facility that EPE intends to submit pursuant to this Section 25.17 and use good faith efforts to incorporate any of Seller's comments thereto in any such submission. Notwithstanding the foregoing, if EPE discloses information, based on the advice of its counsel that it is legally required to be disclosed, EPE may make such disclosure without being in violation of this Section 25.17.

25.18 Telephone Recording

Each Party acknowledges and agrees to the taping or electronic recording ("***Recording***") of conversations between the Parties with respect to all scheduling and dispatch issues, whether by one or the other or both Parties, and that the Recordings will be retained in confidence, secured from improper access, and may be submitted in evidence in any suit, action or proceedings relating to this PPA. Each Party waives any further notice of that monitoring or Recording and agrees to notify its personnel of the monitoring or Recording and to obtain any necessary consent of those personnel. In the event of a dispute between the Parties, each Party with a Recording relating to such dispute shall provide a copy of such Recording to the other Party upon request.

[***Signature page(s) follow***]

IN WITNESS WHEREOF, the Parties have caused this PPA to be duly executed as of the Execution Date. This PPA shall not become effective as to either Party unless and until executed by both Parties.

EPE:

El Paso Electric Company,
a Texas corporation

Kelly Tomblin

President and Chief Executive Officer

Seller:

Santa Teresa Solar, LLC,
a Delaware limited liability company

_____

Name: Hy Martin

Title: Authorized Signatory

EXHIBIT A
(to Solar Power Purchase Agreement)

DESCRIPTION OF GENERATING FACILITY AND SITE MAP

1. **Name of Seller's Generating Facility:** Santa Teresa Solar Project

   Location: 31.8122.314898°, -106.6877.675353°

2. **Owner:** Santa Teresa Solar, LLC

3. **Operator:** Santa Teresa Solar, LLC

4. **Equipment/Fuel:**

   a. **Type of facility and conversion equipment (e.g., Solar PV; Solar Thermal; Wind; Energy Storage; Biomass (including Fuel)):** Solar PV

   b. **Total approximate Solar Units at the Generating Facility:** Up to 50

   c. **Total nameplate capacity (MW_{AC}):** 150

   d. **Total capacity at Point of Delivery:** 150 MW_{AC}

   e. **Additional technology-specific information:** Single axis trackers

5. **Site Map:** A scaled map that complies with the requirements of Section 3.3 of the PPA is attached.

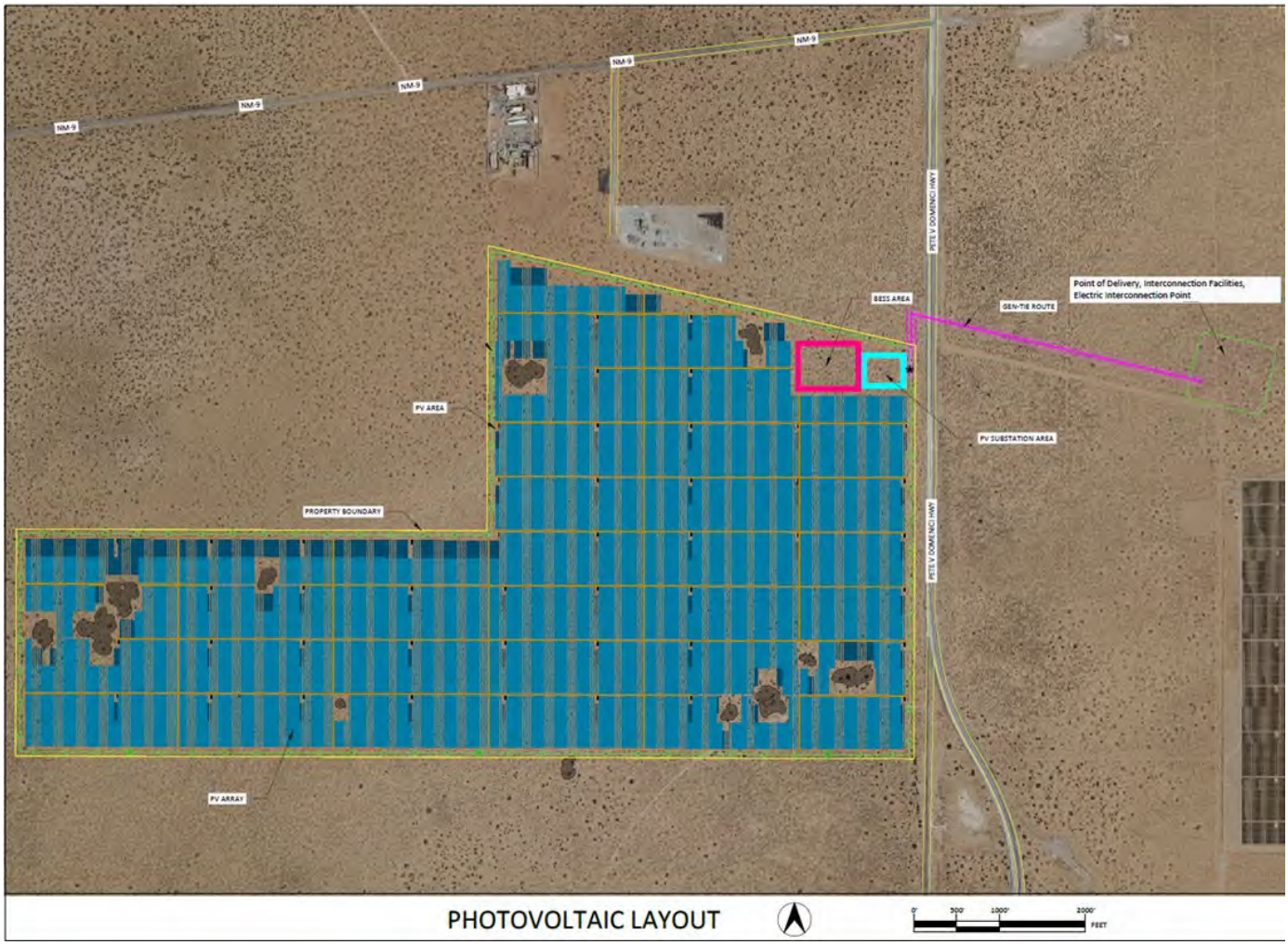
NM-9
NM-9
NM-9
NM-9
NM-9
PETE V DOMENICI HWY
BESS AREA
GEN-TIE ROUTE
Point of Delivery, Interconnection Facilities, Electric Interconnection Point
PV AREA
PV SUBSTATION AREA
PROPERTY BOUNDARY
PETE V DOMENICI HWY
PV ARRAY
PHOTOVOLTAIC LAYOUT
0'
500'
1000'
2000'
FEET

EXHIBIT B
(to Solar Power Purchase Agreement)

ONE-LINE DIAGRAM OF GENERATING FACILITY AND INTERCONNECTION FACILITIES

See below one-line diagram of the Generating Facility, which indicates the Interconnection Facilities, the network upgrades, the Point of Delivery, and ownership and location of meters. The Point of Delivery is the busbar of the 115 kV Verde substation.

Figure C-1: VE100S and VE50S POI Connection and Configuration

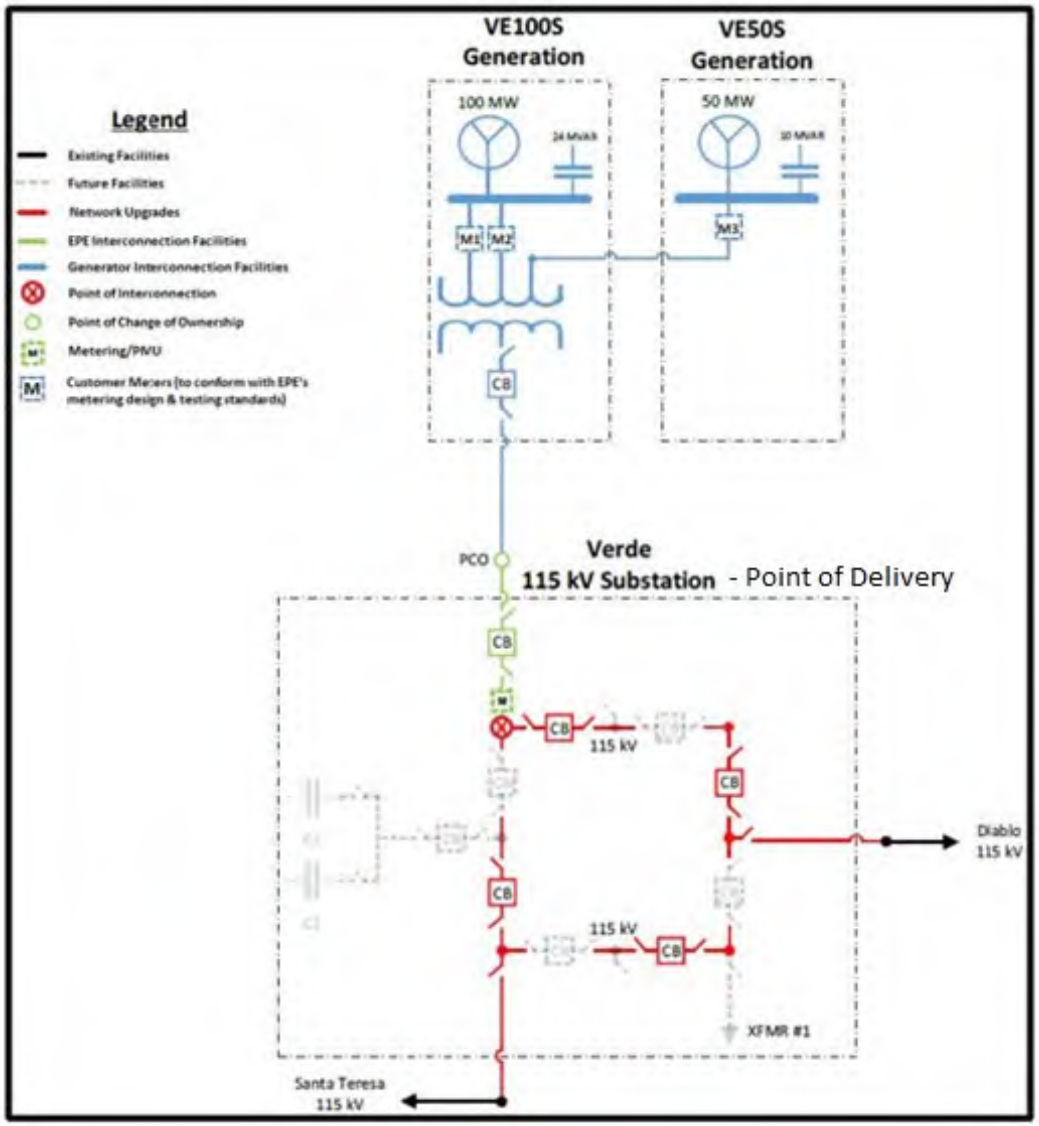

EXHIBIT C
(to Solar Power Purchase Agreement)

DESCRIPTION OF SITE

The Generating Facility will be located in Doña Ana County, New Mexico on privately held land approximately 5 miles southwest of Santa Teresa, New Mexico. The Site coordinates are 31.812 °, -106.687 °.

The legal property description is:

The project will utilize a portion of the 950 acres located in Doña Ana County, New Mexico, more specifically described as:

PARCEL A

A CERTAIN PARCEL OF LAND SITUATE WITHIN PORTIONS OF SECTIONS 10 & 11, TOWNSHIP 29 SOUTH, RANGE 2 EAST, N.M.P.M., DONA ANA COUNTY, NEW MEXICO, AND BEING MORE PARTICULARLY DESCRIBED BY METES ANO BOUNDS AS FOLLOWS: BEGINNING AT THE NORTHEAST CORNER OF THE PARCEL HEREIN DESCRIBED, AT A U.S.G.L.0. BRASS CAP FOUND AT THE SECTION CORNER COMMON TO SECTIONS 1, 2, 11 & 12, TOWNSHIP 29 SOUTH, RANGE 2 EAST, N,M.P,M., WHENCE A U,S.GLO. BRASS CAP FOUND AT THE QUARTER CORNER COMMON TO SECTIONS 1 & 2, TOWNSHIP 29 SOUTH, RANGE 2 EAST, N.M.P.M. BEARS, N 00° 15' 11" E, A DISTANCE OF 2641.11 FEET; THENCE, FROM THE POINT OF BEGINNING AND CONTINUING ALONG THE SECTION LINE COMMON TO SECTIONS 11 & 12, S 00° 17' 15" WA DISTANCE OF 2639.37 FEET TO A FOUND #5 REBAR WITH CAP STAMPED "NMPE LS 5948" AND A U.S.G.L.0, BRASS CAP (BENT, NOT HONORED) AT THE QUARTER CORNER COMMON TO SECTIONS 11 & 12, TOWNSHIP 29 SOUTH, RANGE 2 EAST, N.M.P.M.;

THENCE, N 39° 49' 48" W A DISTANCE OF 2639.77 FEET TO A SET #5 REBAR WITH CAP STAMPED "NMPS 15075" ON THE CENTER QUARTER CORNER OF SECTION 11, TOWNSHIP 29 SOUTH, RANGE 2 EAST, N.M.P.M.;

THENCE, CONTINUING ALONG THE MID-SECTION LINE OF SECTION 11, N 89° 48' 47" W A DISTANCE OF 2639.76 FEET TO A U.S.G.L.0. BRASS CAP FOUND AT THE QUARTER CORNER COMMON TO SECTIONS 10 & 11, TOWNSHIP 29 SOUTH, RANGE 2 EAST, N.M.P.M.;

THENCE, ALONG THE MID-SECTION LINE OF SECTION 10, N 89° 57' 08" W A DISTANCE OF 205.47 FEET TO A FOUND #5 REBAR WITH CAP STAMPED "NMPE LS 5948" SET AT THE SOUTHWEST CORNER OF THE PARCEL HEREIN DESCRIBED;

THENCE, LEAVING THE MIO-SECTION LINE OF SECTION 10, N 00° 16' 50" EA DISTANCE OF 2642.45 FEET TO 5/8" REBAR WITH CAP STAMPED "NMPE LS 5948" SET ON THE SECTION LINE COMMON TO SECTIONS 3 & 10 TOWNSHIP 29 SOUTH, RANGE 2 EAST, N.M.P.M.;

THENCE, ALONG THE SECTION LINE COMMON TO SECTIONS 3 & 10, S 89° 58' 17" EA DISTANCE OF 205.77 FEET TO A U.S.G.L.0. BRASS CAP AT THE SECTION CORNER COMMON TO SECTIONS 2, 3, 10 & 11, TOWNSHIP 29 SOUTH, RANGE 2 EAST, N.M.P.M.;

THENCE, CONTINUING ALONG THE SECTION LINE COMMON TO SECTIONS 2 & 11, S 89° 48' 47" E A DISTANCE OF 2639.76 FEET TO A FOUND #5 REBAR WITH CAP STAMPED "NMPE LS 5948" AND A U.S.GLO. BRASS CAP (BENT, NOT HONORED) AT THE QUARTER CORNER COMMON TO SECTIONS 2 & 11, TOWNSHIP 29 SOUTH, RANGE 2 EAST, N.M,P.M.;

THENCE, CONTINUING ALONG THE SECTION LINE COMMON TO SECTIONS 2 & 11, S 89° 45' 19" E A DISTANCE OF 2639.79 FEET TO THE POINT OF BEGINNING OF THE PARCEL HEREIN DESCRIBED, SAID PARCEL CONTAINING 14,489,290 SQUARE FEET OR 332.6383 ACRES OF LAND, MORE OR LESS.

PARCEL B

A CERTAIN PARCEL OF LAND SITUATE WITHIN PORTIONS OF SECTIONS 1 & 12, TOWNSHIP 29 SOUTH, RANGE 2 EAST, NEW MEXICO PRINCIPAL MERIDIAN, DONA ANA COUNTY, NEW MEXICO, AND BEING MORE PARTICULARLY DESCRIBED BY METES AND BOUNDS AS FOLLOWS:

BEGINNING AT A FOUND #5 REBAR WITH CAP STAMPED "NMPE LS 5948" AT THE NORTHEAST CORNER OF THE PARCEL HEREIN DESCRIBED, WHENCE A U.S.GLO. BRASS CAP FOUND AT THE QUARTER CORNER COMMON TO SECTION 1 TOWNSHIP 29 SOUTH, RANGE 2 EAST, AND SECTION 6 TOWNSHIP 29 SOUTH, RANGE 3 EAST, NEW MEXICO PRINCIPAL MERIDIAN, BEARS N 33° 00' 50" E, A DISTANCE OF 554,03 FEET;

THENCE, FROM THE POINT OF BEGINNING S 00° 14' 17" W A DISTANCE OF 1975.68 FEET TO A FOUND #5 REBAR WITH CAP STAMPED "NMPE LS 5948" SET AT AN ANGLE POINT OF THE PARCEL HEREIN DESCRIBED;

THENCE, S 00° 07' 31" W A DISTANCE OF 200.24 FEET TO A FOUND #5 REBAR WITH CAP STAMPED "NMPE LS 5948" ON THE SECTION LINE COMMON TO SECTIONS 1 AND 12, TOWNSHIP 29 SOUTH, RANGE 2 EAST, N.M.P.M.;

THENCE, S 00° 10· 47" W A DISTANCE OF 1099.88 FEET TO A FOUND #5 REBAR WITH CAP STAMPED "NMPE LS 5948" AT AN ANGLE POINT OF THE PARCEL HEREIN DESCRIBED;

THENCE, S 00° 16' 31" WA DISTANCE OF 1540.46 FEET TO S FOUND #5 REBAR WITH CAP STAMPED "NMPE LS 5948" AT THE SOUTHEAST CORNER OF THE PARCEL HEREIN DESCRIBED, ALSO BEING A POINT ON THE EAST-WEST MIDSECTION LINE OF SECTION 12;

THENCE, ALONG THE EAST-WEST MIDSECTION LINE OF SECTION 12, N 89° 47' 52" W A DISTANCE OF 2346.29 FEET TO A FOUND #5 REBAR WITH CAP STAMPED "NMPE LS 5948" AT THE CENTER QUARTER CORNER OF THE PARCEL HEREIN DESCRIBED;

THENCE, CONTINUING ALONG THE EAST-WEST MIDSECTION LINE OF SECTION 12, N 89° 47' 50" W A DISTANCE OF 2646.68 FEET TO A FOUND #5 REBAR WITH CAP STAMPED "NMPE LS 5948" AND A U.S.G.L.0. BRASS CAP (BENT, NOT HONORED) AT THE QUARTER CORNER COMMON TO SECTIONS 11 & 12, TOWNSHIP 29 SOUTH, RANGE 2 EAST, N.M.P.M.;

THENCE, ALONG THE SECTION LINE COMMON TO SECTIONS 11 & 12, N 00° 17' 15" EA DISTANCE OF 2639.37 FEET TO A FOUND U,S.G.L.O. BRASS CAP FOUND AT THE SECTION CORNER COMMON TO SECTIONS 1, 2, 11 & 12, TOWNSHIP 29 SOUTH, RANGE 2 EAST, N.M.P.M.;

THENCE, ALONG THE SECTION LINE COMMON TO SECTIONS 1 & 2. N oo· 15' 12" E A DISTANCE OF 2641.12 FEET TO A FOUND U.S.GLO. BRASS CAP FOUND AT THE

QUARTER CORNER COMMON TO SECTIONS 1 & 2, TOWNSHIP 29 SOUTH, RANGE 2 EAST, N.M.P.M.;

THENCE, CONTINUING ALONG THE SECTION LINE COMMON TO SECTIONS 1 & 2, N 00° 18' 39" E A DISTANCE OF 679.33 FEET TO A FOUND #5 REBAR WITH CAP STAMPED

"NMPE LS 5948" AT THE NORTHWEST CORNER OF THE PARCEL HEREIN DESCRIBED;

THENCE, LEAVING THE WESTERLY BOUNDARY OF SECTION 1, S 76' 53' 05" EA DISTANCE OF 5117.30 FEET TO THE POINT OF BEGINNING OF THE PARCEL HEREIN DESCRIBED, SAID PARCEL CONTAINING 26,892,126 SQUARE FEET OR 617.3582 ACRES OF LAND, MORE OR LESS.

PARCEL C

A CERTAIN PARCEL OF LAND SITUATE WITHIN A PORTION OF SECTION 6, TOWNSHIP 29 SOUTH, RANGE 3 EAST, NEW MEXICO PRINCIPAL MERIDIAN, DONA ANA COUNTY, NEW MEXICO, AND BEING MORE PARTICULARLY DESCRIBED BY METES AND BOUNDS AS FOLLOWS:

BEGINNING AT A #5 REBAR WITH CAP STAMPED "CHRISTMAS PS 23788" AT THE NORTHEAST CORNER OF THE PARCEL HEREIN DESCRIBED, WHENCE A U.S.G.L.0. BRASS CAP FOUND AT THE NORTHEAST CORNER OF SAID SECTION 6 TOWNSHIP 29 SOUTH, RANGE 3 EAST, NEW MEXICO PRINCIPAL MERIDIAN, BEARS N 24° 04' 35" E, A DISTANCE OF 3588.18 FEET;

THENCE, FROM THE POINT OF BEGINNING S 13° 06' 02" W A DISTANCE OF 600.02 FEET TO A FOUND #5 REBAR WITH CAP STAMPED "CHRISTMAS PS 23788" SET AT AN ANGLE POINT OF THE PARCEL HEREIN DESCRIBED;

THENCE, N 76° 53' 56" WA DISTANCE OF 707.04 FEET TO A FOUND #5 REBAR WITH CAP STAMPED "SMELSER PS 15519" SET AT AN ANGLE POINT OF THE PARCEL HEREIN DESCRIBED;

THENCE, N 13° 06' 36" E A DISTANCE OF 600.05 FEET TO A FOUND #5 REBAR WITH CAP, ILLEGIBLE SET AT AN ANGLE POINT OF THE PARCEL HEREIN DESCRIBED;

THENCE, S 76° 53' 47" E A DISTANCE OF 706.94 FEET TO THE POINT OF BEGINNING OF THE PARCEL HEREIN DESCRIBED, SAID PARCEL CONTAINING 424,221 SQUARE FEET OR 9.7388 ACRES OF LAND, MORE OR LESS.

EXHIBIT D
(to Solar Power Purchase Agreement)

NOTICE ADDRESSES

If to Seller and not otherwise specified below, to:

Santa Teresa Solar, LLC
c/o D. E. Shaw Renewable Investments
575 Fifth Avenue, 24th Floor
New York, New York 10017
Attn: General Counsel
Email: DESRI-Notices@deshaw.com

and

Santa Teresa Storage, LLC
c/o D. E. Shaw Renewable Investments
575 Fifth Avenue, 24th Floor
New York, New York 10017
Attn: Chief Development Officer, Hy Martin
Email: hy.martin@deshaw.com

Federal Tax ID Number: 84-2086900

With additional Notices of an Event of Default or Potential Event of Default to:

Attn: General Counsel
Phone: 212.478.0000
Email: DESRI-Notices@deshaw.com

If to EPE and not otherwise specified below, to:

El Paso Electric Company
P.O. Box 962
El Paso, Texas 79960
Attn: General Counsel
Phone: 915-543-0001
Email: epelegal@epelectric.com

and

El Paso Electric Company
P.O. Box 962
El Paso, Texas 79960
Attn: James Schichtl, Vice President – Regulatory Operations & Resource Strategy
Email: james.schichtl@epelectric.com

Federal Tax ID Number: 74-0607870

With additional Notices of an Event of Default or Potential Event of Default to:

Attn: General Counsel
Phone: 915-543-0001
Email: epelegal@epelectric.com

Notices Regarding Proposed Commercial Operation Date:

Attn: Hy Martin; Liz Peyton
Phone: 212.478.0238; 914.319.5091
Email: hy.martin@deshaw.com;
liz.peyton@deshaw.com;
desri-project-delivery@world.deshaw.com

Notices Regarding Proposed Commercial Operation Date:

Attn: EPE COD Notices
Email: CODnotices@epelectric.com

Scheduling (Current Day):

Attn: Carolyn Bultena
Phone: 832-266-7988
Email: DESRI-Notices@deshaw.com

Scheduling (Current Day):

Attn: Real Time Trading
Phone: 915-543-5808
Fax: 915-543-2204
Email: realtimetrading@epelectric.com

Scheduling (Day-Ahead):

Attn: Carolyn Bultena
Phone: 832-266-7988
Email: DESRI-Notices@deshaw.com

Scheduling (Day-Ahead):

Attn: Day Ahead Trading
Phone: 915-543-4036/915-543-2044
Fax: 915-543-2204
Email: dayaheadtrading@epelectric.com

Invoices:

Attn: General Counsel
Email: desri-santa-teresa@world.deshaw.com

Payments:

Attn: General Counsel
Email: DESRI-notices@deshaw.com

Wire Transfer:

Bank: Wells Fargo Bank
ABA: 121000248
Acct: 4104096037

Credit and Collections:

Attn: General Counsel
Email: DESRI-notices@deshaw.com

Invoices:

Attn: Alejandra Guevara, Supervisor – Energy Accounting
Phone: 915-543-2055
Email: mktcheckout@epelectric.com

Payments:

Attn: Accounts Payable, Jo Ann Judd, Manager – Cash Management
Phone: 915-543-5961
Email: ap@epelectric.com
joann.judd@epelectric.com

Wire Transfer:

Bank: Well Fargo Bank
ABA: 121000248
Acct: 4825879174

***Please send an email to **cashmanagement@epelectric.com** prior to sending wire payment with the purpose of the payment and EPE internal contact to ensure your wire transfer is accurately accounted.*

Credit and Collections:

Attn: Nydia Torres, Manager – Claims and Risk Management
Phone: 915-543-2061
Email: nydia.torres@epelectric.com

EXHIBIT E
(to Solar Power Purchase Agreement)

SELLER'S REQUIRED GOVERNMENTAL AUTHORITY PERMITS, CONSENTS, APPROVALS, LICENSES AND AUTHORIZATIONS TO BE OBTAINED

Permit, Consent, Approval, License, and/or Authorization	Governmental Entity
Construction Stormwater General Permit	Environmental Protection Agency
Solid Waste Permit	New Mexico Environmental Department
Building Permit	Doña Ana County

EXHIBIT F
(to Solar Power Purchase Agreement)

COMMISSIONING AND TESTING

- String Insulation Resistance and Continuity Test
  - String Voe measurements
  - String Current Checks
    - DC Feeder Insulation Resistance and Continuity Tests
    - Inverter OEM Commissioning Procedures
    - MW Control Tuning/Testing
    - V/MVAR/pf Control Tuning/Testing
    - Curtailment Control (If applicable)

EXHIBIT G
(to Solar Power Purchase Agreement)

INSURANCE COVERAGES

Seller shall obtain and maintain the following insurance coverages, at a minimum:

(a) Workers' Compensation Insurance for statutory obligations imposed by Applicable Law, including, where applicable, the Alternate Employer Endorsement, the United States Longshoremen's and Harbor Workers' Act, the Maritime Coverage and the Jones Act;

(b) Employers' Liability Insurance, including Occupational Disease, shall be provided with a limit of (i) One Million Dollars ($1,000,000) for bodily injury per accident, (ii) One Million Dollars ($1,000,000) for bodily injury by disease per policy, and (iii) One Million Dollars ($1,000,000) for bodily injury by disease per employee;

(c) Business Automobile Liability Insurance which shall apply to all owned, non-owned, leased, and hired automobiles with a limit of One Million Dollars ($1,000,000) per accident for bodily injury and property damage;

(d) General Liability Insurance which shall apply to liability arising out of premises, operations, bodily injury, property damage, products and completed operations and liability assumed under and insured contract (contractual liability), with a limit of One Million Dollars ($1,000,000) per occurrence, Two Million Dollars ($2,000,000) aggregate. The products and completed operations coverage insurance shall be provided for the duration of any applicable warranty period;

(e) Excess Liability Insurance which shall apply to Employers Liability, Commercial General Liability and Business Automobile Liability Insurance, required in (b), (c), and (d) above, with total limits no less than of Five Million Dollars ($5,000,000) per occurrence and Five Million Dollars ($5,000,000) aggregate, when combined with primary coverages;

(f) Broad Form All-Risk Property Insurance with limits of insurance written on a replacement cost basis, including applicable sublimits for windstorm (named and unnamed), earthquake, hail, tornado, severe convective storm, wildfire, flood exposures and other customarily sublimited coverages.

Such minimum insurance limits may be satisfied either by primary insurance, excess or umbrella insurance, self-insurance or a combination of any of the foregoing.

Except for Workers' Compensation Insurance, EPE shall be endorsed as an additional insured on Seller's insurance policies required to be maintained under the PPA and such policies shall provide for a waiver of subrogation in favor of EPE. All policies of insurance required to be maintained by Seller hereunder shall provide for a severability of interests clause and include a provision that Sellers's insurance policies are to be primary and non-contributory to any insurance that may be maintained by or on behalf of EPE.

In the event that any policy furnished by Seller provides for coverage on a "claims made" basis, the retroactive date of the policy shall be the same as the Execution Date of the PPA, or such other date, as to protect the interest of EPE. Furthermore, for all policies furnished on a "claims made" basis, Seller's providing of such coverage shall survive the termination of the PPA and the expiration of any applicable warranty period, until the expiration of the maximum statutory period of limitations in the State of California for actions based in contract or in tort. If coverage is on "occurrence" basis, Seller shall maintain such insurance during the entire term of the PPA.

Seller shall promptly provide evidence of the minimum insurance coverage required under the PPA in the form of an ACORD certificate or other certificate of insurance. If any of the required insurance is cancelled or non-renewed, Seller shall within thirty (30) Days or, if due to nonpayment of premium, ten (10) Days of such cancellation or non-renewal provide written notice to EPE and file a new certificate of insurance with EPE, demonstrating that the required insurance coverage to be maintained hereunder has been extended or replaced. Neither Seller's failure to provide evidence of minimum coverage of insurance following EPE's request, nor EPE's decision to not make such request, shall release Seller from its obligation to maintain the minimum coverage provided for in this Exhibit G.

Seller shall be responsible for covering all deductibles associated with the foregoing insurance coverage.

EXHIBIT H
(to Solar Power Purchase Agreement)

FORM OF ATTESTATION AND BILL OF SALE

Pursuant to WREGIS, Santa Teresa Solar, LLC ("***Seller***") hereby sells, transfers and delivers to El Paso Electric Company, a Texas corporation ("***EPE***") the RECs and Environmental Attributes associated with the generation of Energy at the Generating Facility, as detailed in the Solar Power Purchase Agreement between the Parties dated as of [ ] (the "***PPA***"). Terms used, but not defined herein, shall have the meaning set forth in the PPA.

_____
Name of Renewable Energy Facility

_____	_____	_____
Fuel Type	Maximum Power Output (MW)	Operation Date

Date: _____ MWh generated: _____

One (1) REC represents the reporting rights associated with one (1) MWh generated from the Generating Facility.

Seller further attests, warrants and represents as follows:

i) to the best of its knowledge, the information provided herein is true and correct;

ii) its sale to EPE is its one and only sale of the RECs and Environmental Attributes with respect to the energy referenced herein and no third party has claimed nor can claim any interest in such RECs and Environmental Attributes;

iii) the Generating Facility identified above produced the number of MWh above during the period indicated above;

iv) Seller has title to and ownership of the RECs and Environmental Attributes sold hereunder; and

v) Seller owns the _____
Name of the Renewable Energy Facility

This serves as a bill of sale, transferring from Seller to EPE all of Seller's right, title and interest in and to the RECs and Environmental Attributes associated with the generation of the above referenced Energy.

Contact Person: _____

Phone: _____

Fax: _____

Email: _____

Seller:

Santa Teresa Solar, LLC,
a Delaware limited liability company

_____

Name: _____

Title: _____

EXHIBIT I
(to Solar Power Purchase Agreement)

PERFORMANCE GUARANTEE

Section 1 Definitions

Capitalized terms used in this Exhibit I and not defined herein shall have the meaning assigned in Article 1 of the PPA.

"***Deficient Volume***" has the meaning set forth in Section 2.1 of this Exhibit I.

"***Expected Generation***" means with respect to any Commercial Operation Year, the quantity of Energy expected to be produced during such Commercial Operation Year, determined by reference to Attachment 1 to this Exhibit I, which shall be updated to reflect the Installed Solar Capacity as of the Commercial Operation Date.

"***Minimum Performance Volume***" means an amount of Energy equal to eighty percent (80%) of the aggregate Expected Generation in a Performance Measurement Period, as identified with reference to each applicable Performance Measurement Period in Attachment 1 to this Exhibit I.

"***Performance Damages***" means, with respect to any Performance Measurement Period, a Dollar amount equal to the product of (a) the difference between (i) the Deficient Volume and (ii) the Replacement Volume, multiplied by (b) the Solar Energy Output Payment Rate.

"***Performance Measurement Report***" has the meaning set forth in Section 2.1 of this Exhibit I.

"***Replacement Energy Output***" means Energy Output procured by Seller acting consistently with Prudent Utility Practice in connection with replacing any Deficient Volume.

"***Replacement Volume***" has the meaning set forth in Section 2.2 of this Exhibit I.

"***Solar Excused Output***" means, in any Performance Measurement Period, the sum of all Energy that is not generated or delivered by the Generating Facility or the Energy Storage Facility to the Point of Delivery during such Performance Measurement Period as a result of Seller Excused Hours.

Section 2 Performance Damages

2.1 Performance Measurement Report. No later than the thirtieth (30th) Day following the second anniversary of the Commercial Operation Date, and then on or before such date's anniversary immediately following each Performance Measurement Period (or, if such Day

is not a Business Day, then the next Business Day), Seller shall prepare and deliver to EPE a statement detailing the following with respect to the immediately preceding Performance Measurement Period (each, a "***Performance Measurement Report***"): (a) the actual amount of Metered Output delivered in such Performance Measurement Period, (b) a calculation of the difference (if any) between (i) the Minimum Performance Volume minus (ii) the sum of (x) the actual amount of Metered Output delivered in the Performance Measurement Period plus (y) Solar Excused Output plus (z) any Replacement Volume (the "***Deficient Volume***"), and (c) a calculation of the Performance Damages owed by Seller to EPE in connection with such Deficient Volume (if any). In no event shall Seller's total liability to EPE, or the aggregate Performance Damages payable, pursuant to this Exhibit I exceed EPE's Replacement Energy Costs incurred in connection with any Deficient Volume. If Performance Damages are due from Seller, Seller shall pay such damages no later than fifteen (15) Business Days after providing the Performance Measurement Report.

2.2 Replacement Energy Output. At Seller's sole option, within thirty (30) Days of receiving a Performance Measurement Report, Seller may choose to procure and deliver to EPE Replacement Energy Output in a quantity up to the Deficient Volume for such Performance Measurement Period ("***Replacement Volume***"). If Seller chooses to procure Replacement Volume, the Performance Damages shall be recalculated to account for the delivery of such Replacement Volume, as necessary.

2.3 Disputes. Disputes as to any calculations under this Exhibit I shall be addressed as provided in Section 14.8 of the PPA.

2.4 Sole Remedy. The payment of Performance Damages shall be EPE's sole and exclusive remedy, and Seller's sole and exclusive liability, for Deficient Volume in any Performance Measurement Period. The Parties acknowledge and agree that the terms, conditions and amounts determined according to this Exhibit I for the payment of Performance Damages are reasonable considering the losses and expenses that EPE would be expected to sustain in the event of any Deficient Volume. The Parties have agreed upon and established the amounts of the Performance Damages because of the difficulty of ascertaining the exact amount of such losses and expenses in such event or circumstance and because otherwise obtaining an adequate remedy would be difficult or inconvenient. The Performance Damages are not a penalty and shall be paid regardless of the amount of losses and expenses that EPE actually sustains.

ATTACHMENT 1 TO EXHIBIT I

EXPECTED GENERATION

Commercial Operation Year	Expected Generation (MWh)	Performance Measurement Period	Minimum Performance Volume (MWh)
1	476,542	1	758,655
2	471,777		
3	470,833	2	752,579
4	469,891		
5	468,952	3	749,572
6	468,014		
7	467,078	4	746,577
8	466,143		
9	465,211	5	743,594
10	464,281		
11	463,352	6	740,622
12	462,426		
13	461,501	7	737,662
14	460,578		
15	459,657	8	734,715
16	458,737		
17	457,820	9	731,779
18	456,904		
19	455,990	10	728,855
20	455,078		

EXHIBIT J
(to Solar Power Purchase Agreement)

FORM OF SELLER GUARANTY

GUARANTY

This Guaranty (this "***Guaranty***"), dated as of [_____], 2024 (the "***Effective Date***"), is issued and delivered by D.E. SHAW RENEWABLE INVESTMENTS, L.L.C., a Delaware limited liability company (the "***Guarantor***"), for the benefit of EL PASO ELECTRIC COMPANY, a Texas corporation (the "***Beneficiary***").

WHEREAS, the Beneficiary and Santa Teresa Solar, LLC, a Delaware limited liability company (the "***Obligor***"), entered into that certain Solar Power Purchase Agreement, dated as of [ ] (as may be amended, restated, replaced or assigned from time to time in accordance with the terms thereof, the "***Agreement***"); and

WHEREAS, Guarantor wishes to deliver to the Beneficiary this Guaranty as an inducement to Beneficiary to enter into the Agreement.

NOW, THEREFORE, in consideration of the foregoing and for good and valuable consideration, the Guarantor hereby agrees as follows:

1. General. Unless otherwise defined herein, all capitalized terms used in this Guaranty that are defined in the Agreement shall have the respective meanings assigned to them in the Agreement. Guarantor hereby absolutely, unconditionally and irrevocably guarantees, as an independent obligation of Guarantor, the prompt and complete payment to the Beneficiary when due, but in no case more than five (5) Business Days after Beneficiary delivers a written demand for payment, of the following obligations of Obligor under the Agreement (the "***Guaranteed Obligations***"):

(a) for the period beginning on the Effective Date until the earlier of the date on which (i) the Guaranteed Obligations have been satisfied in full and (ii) Seller has posted the Delivery Term Security, all claims under the Agreement up to an amount equal to Fifteen Million Dollars ($15,000,000.00) (the "***Development Security Cap***");

(b) for the period beginning on the earlier of (i) the Commercial Operation Date and (ii) the Outside Commercial Operation Date until the earlier of (x) the date on which the Guaranteed Obligations have been satisfied in full and (y) the eleventh (11th) anniversary of the Commercial Operation Date, all claims under the Agreement up to an amount equal to Fifteen Million Dollars ($15,000,000.00) (the "***Initial Delivery Term Security Cap***"); and

(c) from and after the eleventh (11th) anniversary of the Commercial Operation Date until the end of the Expiration Date, all claims under the Agreement up to an amount equal to Nine Million Seven Hundred Fifty Thousand Dollars ($9,750,000.00) (the "***Reduced Delivery Term Security Cap***");

provided, that, upon a final, nonappealable adjudication by a court of competent jurisdiction that Guarantor is obligated to pay any of the Guaranteed Obligations hereunder, the Guarantor shall pay Beneficiary, no more than five (5) Business Days after Beneficiary delivers a written demand for payment therefor, for all reasonable and documented out-of-pocket costs and expenses incurred by Beneficiary in enforcing its rights under this Guaranty, and payment of such reasonable and documented out-of-pocket costs and expenses shall not be subject to the Development Security Cap, the Initial Delivery Term Security Cap or the Reduced Delivery Term Security Cap, as applicable.

2. Nature of Guaranty. This Guaranty is one of payment and not of collection and shall apply regardless of whether recovery of any Guaranteed Obligations may be or becomes barred by any statute of limitations, discharged, or uncollectible due to any change in law or regulation or in any bankruptcy, insolvency or other proceeding, or otherwise be unenforceable. All sums payable by Guarantor hereunder shall be made in immediately available funds without any setoff, deduction, counterclaim or withholding for taxes unless required by Applicable Law, in which case Guarantor shall pay, in addition to the payment to which Beneficiary is otherwise entitled, such additional amount as is necessary to ensure that the net amount actually received by Beneficiary (free and clear of any setoff, deduction, counterclaim or withholding for taxes) will equal the full amount which Beneficiary would have received had no such setoff, deduction, counterclaim or withholding been required. The Guarantor agrees that this Guaranty is an independent obligation of Guarantor, and that the Beneficiary may resort to the Guarantor for payment of any of the Guaranteed Obligations, whether or not the Beneficiary shall have resorted to any collateral security, or shall have proceeded against the Obligor with respect to any of the Guaranteed Obligations. If any payment of the Obligor in respect of the Guaranteed Obligations is rescinded or must otherwise be returned for any reason whatsoever, the Guarantor shall remain liable hereunder in respect to such Guaranteed Obligations as if such payment had not been made. No failure on the part of the Beneficiary to exercise, and no delay in exercising, any right, remedy or power hereunder shall operate as a waiver thereof, nor shall any single or partial exercise by the Beneficiary of any right, remedy or power hereunder preclude any other future exercise of any right, remedy or power.

3. Waivers. Guarantor expressly waives (a) protest; (b) notice of acceptance, dishonor, presentment and demand and all other notices whatsoever; (c) demand for payment of any of the Guaranteed Obligations; (d) any right to assert against Beneficiary any defense (legal or equitable), counter-claim, set-off, cross-claim or other claim that Guarantor may now or at any time hereafter have (i) against Obligor or (ii) acquired from any other party, not affiliated with Guarantor, to which Beneficiary may be liable; (e) any defense arising by reason of any claim or defense based upon an election of remedies by Beneficiary which in any manner impairs, affects, reduces, releases, destroys or extinguishes Guarantor's subrogation rights, rights to proceed against Obligor for reimbursement, or any other rights of the Guarantor to proceed against Obligor

or against any other person, property or security; and (f) any and all other suretyship defenses. Beneficiary may at any time, whether before or after termination of this Guaranty, and from time to time without notice to or consent of Guarantor and without impairing or releasing the obligations of Guarantor hereunder: (1) modify, compromise, release, subordinate, substitute, exercise, alter, enforce or fail or refuse to exercise or enforce any claims, rights or remedies of any kind which Beneficiary may have, at any time against Obligor or Guarantor, endorser, or other party liable for the Guaranteed Obligations or any part or term thereof, or with respect to collateral or security of any kind Beneficiary may have, at any time, whether under the Agreement, any other agreement, or this Guaranty, or otherwise; (2) release, substitute, or surrender and to enforce, collect or liquidate or to fail or refuse to enforce, collect or liquidate, any collateral or security of any kind Beneficiary may have, at any time, whether under this Guaranty or otherwise; and (3) take and hold security for the payment and performance of the Guaranteed Obligations, and exchange, enforce, waive, and release or apply such security and direct the order or manner of sale thereof as Beneficiary in its discretion may determine. Guarantor hereby consents to each and all of the foregoing acts, events and/or occurrences.

4. Limitations. This Guaranty shall continue in full force and effect with respect to all Guaranteed Obligations arising prior to its termination. This Guaranty shall continue to be effective or be reinstated, as the case may be, if at any time payment, or any part thereof, of any Guaranteed Obligation is rescinded or must otherwise be restored or returned due to bankruptcy or insolvency laws or otherwise. The failure of Beneficiary to enforce any of the provisions of this Guaranty at any time or for any period of time shall not be construed to be a waiver of any such provision or the right thereafter to enforce the same. Each and every right, remedy and power hereby granted to the Beneficiary or allowed to it by law or other agreement shall be cumulative and not exclusive of any other, and may be exercised by the Beneficiary from time to time. The terms and provisions hereof may not be waived, altered, modified, or amended except in a writing executed by Guarantor and a duly authorized officer of Beneficiary.

5. Subordination. Until all Guaranteed Obligations are paid in full, Guarantor hereby waives all rights of subrogation, reimbursement, contribution, and indemnity from Obligor and any collateral held therefor, and Guarantor hereby subordinates all rights under any debts owing from Obligor to Guarantor, whether now existing or hereafter arising, to the prior payment of the Guaranteed Obligations. No payment in respect of any such subordinated debts shall be received by Guarantor. Upon any Obligation becoming due, Obligor or its assignee, trustee in bankruptcy, receiver, or any other person having custody or control over any or all of Obligor's property is authorized and directed to pay to Beneficiary the entire unpaid balance of the debt before making any payments to Guarantor, and for that purpose. Any amounts received by Guarantor in violation of the foregoing shall be received as trustee for the benefit of Beneficiary and shall forthwith be paid over to Beneficiary.

6. Representations and Warranties. The Guarantor represents and warrants to Beneficiary that: (a) it is duly organized, validly existing and in good standing under the laws of the jurisdiction of its formation and has full limited liability company power to execute, deliver and perform this Guaranty; (b) the execution, delivery and performance of this Guaranty have been and remain duly authorized by all necessary limited liability company action and do not contravene

any provision of law or the Guarantor's constitutional documents or any contractual restriction binding on the Guarantor or its assets; and (c) this Guaranty constitutes the legal, valid and binding obligation of the Guarantor enforceable against Guarantor in accordance with its terms, subject, as to enforcement, to bankruptcy, insolvency, reorganization and other laws of general applicability relating to or affecting creditor's rights and to general equity principles and public policy.

7. Termination. This Guaranty shall remain in full force and effect until the earlier of: (a) such time as all of the Guaranteed Obligations have been paid and discharged in full; (b) such time as the Development Security Cap, the Initial Delivery Term Security Cap or the Reduced Delivery Term Security Cap, as applicable, is reached; (c) this Guaranty is replaced with a different form of Security in accordance with the terms and conditions of the Agreement; and (d) the end of the Term (the "***Expiration Date***"); provided, however, that the Guarantor will remain liable hereunder for Guaranteed Obligations that were outstanding prior to the Expiration Date.

8. Governing Law. The interpretation and performance of this Guaranty and each of its provisions shall be governed and construed in accordance with the laws of the State of Texas, notwithstanding its conflict of laws rules or any principles that would trigger the application of any other law. All disputes arising out of or related to this Guaranty shall be brought in the state or federal courts located in El Paso, Texas.

9. Entire Agreement. The terms and provisions contained in this Guaranty constitute the entire agreement between Guarantor and Beneficiary with respect to the subject matter hereof and shall supersede all previous communications, representations, or agreements, either oral or written, between Guarantor and Beneficiary with respect to the subject matter hereof.

10. Severability. In the event any of the terms, covenants, or conditions of this Guaranty, or the application of any such terms, covenants, or conditions, shall be held invalid, illegal, or unenforceable by any court or administrative body having jurisdiction, all other terms, covenants, and conditions of this Guaranty and their application not adversely affected thereby shall remain in force and effect; provided, however, that Guarantor and Beneficiary shall negotiate in good faith to attempt to implement an equitable adjustment in the provisions of this Guaranty with a view toward effecting the purposes of this Guaranty by replacing the provision that is held invalid, illegal, or unenforceable with a valid provision the economic effect of which comes as close as possible to that of the provision that has been found to be invalid, illegal or unenforceable.

11. Disclaimer of Certain Third Party Beneficiary Rights. Nothing in this Guaranty shall be construed to create any duty to, or standard of care with reference to, or any liability to, any Person not a party to this Guaranty.

12. Assignment. Guarantor may not assign its rights nor delegate its obligations under this Guaranty in whole or part, without written consent of Beneficiary, and any purported assignment or delegation absent such consent is void. Beneficiary may not assign its rights nor delegate its obligations under this Guaranty in whole or part, without written consent of Guarantor, except that this Guaranty may be assigned by Beneficiary in connection with a permitted assignment of the Agreement. Any purported assignment or delegation in violation of this Section 12 is void

13. MAXIMUM LIABILITY. NOTWITHSTANDING ANYTHING TO THE CONTRARY CONTAINED OR IMPLIED ELSEWHERE IN THIS GUARANTY, THE MAXIMUM AGGREGATE LIABILITY OF GUARANTOR HEREUNDER FOR PAYMENT OF THE GUARANTEED OBLIGATIONS SHALL NOT EXCEED THE DEVELOPMENT SECURITY CAP, THE INITIAL DELIVERY TERM SECURITY CAP OR THE REDUCED DELIVERY TERM SECURITY CAP, AS APPLICABLE AS OF THE TIME OF DETERMINATION, PLUS ANY ENFORCEMENT COSTS, EXPENSES OR FEES OF BENEFICIARY AS SET FORTH IN SECTION 1.

14. Notices. Notices required by this Guaranty shall be addressed to the other party at the addresses noted below as either party updates them from time to time by written notice to the other party. Any notice, request, consent, or other communication required or authorized under this Guaranty to be given by one party to the other party shall be in writing. It shall either be hand delivered or mailed via overnight service with signature required upon receipt, to the representative of said other party. If hand delivered, the notice, request, consent or other communication shall be simultaneously sent by facsimile or other electronic means. Any such notice, request, consent, or other communication shall be deemed to have been received by the close of the Business Day on which it was hand delivered or transmitted electronically (unless hand delivered or transmitted after such close in which case it shall be deemed received at the close of the next Business Day).

If to the Guarantor, at:

D.E. Shaw Renewable Investments, L.L.C.
575 Fifth Avenue, 24th Floor
New York, New York 10017
Attn: General Counsel
Email: DESRI-Notices@deshaw.com

If to the Beneficiary, at:

El Paso Electric Company
100 N. Stanton St.
El Paso, Texas 79901
Attn: [_____]
Phone: [_____]
Fax: [_____]
Email: [_____]

With a copy to:

[_____]
[Address]
[Address]
Attn. [_____]
Phone: [_____]
Email: [_____]

IN WITNESS WHEREOF, the Guarantor and the Beneficiary have executed this Guaranty as of the Effective Date.

Guarantor:

D.E. Shaw Renewable Investments, L.L.C.
a Delaware limited liability company

_____

Name: _____

Title: _____

Beneficiary:

El Paso Electric Company, a Texas corporation

_____

Name: _____

Title: _____

EXHIBIT K
(to Solar Power Purchase Agreement)

COMMERCIAL OPERATION FORM OF CERTIFICATION

This certification ("***Certification***") of Commercial Operation is delivered by Santa Teresa Solar, LLC ("***Seller***") to El Paso Electric Company ("***EPE***") in accordance with the terms of that certain Solar Power Purchase Agreement dated as of [ ] (the "***PPA***") by and between Seller and EPE. All capitalized terms used in this Certification but not otherwise defined herein shall have the respective meanings assigned to such terms in the PPA.

Seller hereby certifies and represents to EPE the following:

(1) Solar Units with an aggregate capacity of at least One Hundred Fifty (150) MW have been constructed, commissioned and tested and are capable of delivering Energy on a sustained basis (in accordance with the Solar Unit manufacturer's requirements and the Commissioning Tests);

(2) Seller is not in breach of the Interconnection Agreements or the Shared Facilities Agreement; and

(3) the Generating Facility has been completed in all material respects (except for Delayed Solar Capacity and punch list items that do not materially and adversely affect the ability of the Generating Facility to operate as intended).

A certified statement of the Licensed Professional Engineer, attached hereto, has been provided as evidence of Commercial Operation of the Generating Facility to provide Energy Output and meet, at a minimum, the requirements indicated herein.

[***Signature page(s) follow***]

EXECUTED by SELLER this [●] day of [●], 20__

Seller:

Santa Teresa Solar, LLC,
a Delaware limited liability company

_____

Name: _____

Title: _____

Licensed Professional Engineer:

[●],
a [insert state] [corporation/limited liability company]

_____

Name: _____

Title: _____

Date: _____

License Number and LPE Stamp:

EXHIBIT L
(to Solar Power Purchase Agreement)

SOLAR CAPACITY DELAY DAMAGE RATE

The Damage Rate shall be as follows:

(a) $250 per Day, for each Day beginning on the Day following the Expected Commercial Operation Date through the thirtieth (30th) Day following the Expected Commercial Operation Date;

(b) $500 per Day, for each Day beginning on the thirty first (31st) Day following the Expected Commercial Operation Date through the sixtieth (60th) Day following the Expected Commercial Operation Date; and

(c) $750 per Day, beginning on the sixty first (61st) Day following the Expected Commercial Operation Date until the later of the Commercial Operation Date and the Outside Commercial Operation Date.

EXHIBIT M
(to Solar Power Purchase Agreement)

EXAMPLE CALCULATION OF SOLAR ENERGY PAYMENT

This example calculation of the Solar Energy Payment is based on the following assumed facts:

(a) Aggregate Amount of Energy Output delivered to Point of Delivery in such Monthly Billing Period = 28,000 MWh

(b) Aggregate Amount of Energy Output delivered to Solar Charging Point in such Monthly Billing Period = 5,195 MWh

(c) Solar Energy Output Payment Rate = $28.95/MWh

(d) MWh of Deemed Delivered Energy in such Monthly Billing Period = 50 MWh

(e) Deemed Delivered Energy Price = $38.95/MWh assuming that the Grossed-Up PTC Value for the relevant Commercial Operation Year in which this Monthly Billing Period occurs is $10

Given these assumed facts, Seller calculates the Solar Energy Payment payable by EPE for the relevant Monthly Billing Period as follows:

((Aggregate Amount of Energy Output delivered to Point of Delivery in such Monthly Billing Period + Aggregate Amount of Energy Output delivered to Solar Charging Point in such Monthly Billing Period) X Solar Energy Output Payment Rate) + (MWh of Deemed Delivered Energy in such Monthly Billing Period X Deemed Delivered Energy Price) = Solar Energy Payment

((28,000+ 5,195) x $28.95) + (50 x $38.95) = $962,942.75

Execution Version

ENERGY STORAGE AGREEMENT

between

EL PASO ELECTRIC COMPANY,
a Texas corporation,

and

SANTA TERESA STORAGE, LLC,
a Delaware limited liability company

Dated as of November 18, 2024

TABLE OF CONTENTS

Article 1 Definitions and Rules of Interpretation 1

1.1 Definitions 1
1.2 Rules of Construction 20
1.3 Interpretation with Interconnection Agreements 21
1.4 Interpretation of Arrangements for Electric Supply to the Energy Storage Facility 22

Article 2 Term 22

Article 3 Energy Storage Facility Description 22

3.1 Commercial Terms 22
3.2 Energy Storage Facility 23
3.3 Location 23
3.4 General Design of the Energy Storage Facility 24
3.5 Expected Commercial Operation Date 25
3.6 Extension 25
3.7 Delay Damages 25
3.8 Guaranteed ESS Capacity Shortfall Damages 26
3.9 Test Period 26
3.10 Notice of Commercial Operation 26
3.11 Grid Charging 27
3.12 ESS Unit Capabilities 27
3.13 Early Termination 28

Article 4 AGC 28

Article 5 Delivery and Metering 29

5.1 Delivery Arrangements 29
5.2 Availability Reporting 30
5.3 Electric Metering Devices 30
5.4 Adjustment for Inaccurate Meters 31

Article 6 Conditions Precedent 32

6.1 Conditions Precedent 32

Article 7 Sale and Purchase of Product 32

7.1 Sale and Purchase of Product 32
7.2 Title and Risk of Loss 33
7.3 Future Environmental Attributes 33
7.4 Scheduling 34

7.5 Forced Outages 35

Article 8 Payment Calculations 35

8.1 Billing Components 35
8.2 Payment Support Requirement 37
8.3 Survival on Termination 37

Article 9 Billing and Payment Procedures 37

9.1 Statements and Payment of Electricity Payments 37
9.2 Miscellaneous Payments 38
9.3 Currency and Method of Payment 38
9.4 Default Interest 38
9.5 Disputed Items 38
9.6 Statement Errors 39
9.7 Taxes 39
9.8 Setoff and Payment Adjustments 40
9.9 Netting 40
9.10 Survival on Termination 40

Article 10 Operations and Maintenance 41

10.1 Construction of the Energy Storage Facility 41
10.2 Commissioning Tests 42
10.3 Access to and Inspection of the Energy Storage Facility 42
10.4 Operating Parameters 42
10.5 Operating Procedures 43
10.6 Energy Storage Facility Maintenance 44
10.7 Equivalent Full Cycles of ESS 45
10.8 Sales to Third Parties 45
10.9 ESS Performance Tests 45
10.10 Guaranteed ESS Roundtrip Efficiency Payment 46
10.11 Availability Guarantees 47
10.12 Charging Energy Management 47

Article 11 RECs and Environmental Attributes 48

11.1 Sale of Environmental Attributes 48

Article 12 Purchase Option 49

12.1 EPE's Purchase Option on Seller Event of Default 49
12.2 Determination of Fair Market Value of the Energy Storage Facility 49
12.3 Option Exercise 50

Article 13 Default and Remedies 51

13.1 Events of Default of Seller 51

13.2 Events of Default of EPE 53
13.3 Damages Prior to Termination 54
13.4 Termination 55
13.5 [Reserved] 56
13.6 Remedies Cumulative....56
13.7 Waiver and Exclusion of Other Damages 57
13.8 Payment of Amounts Due to EPE 57
13.9 Duty to Mitigate 57
13.10 Security Rights 57
13.11 Limit on Seller Liability 58

Article 14 Contract Administration and Notices 58

14.1 Notices in Writing 58
14.2 Representative for Notices 58
14.3 Authority of Representatives....58
14.4 Records....59
14.5 Provision of Real-Time Data....60
14.6 Examination of Records 60
14.7 Exhibits....61
14.8 Resolution of Issues....61

Article 15 Force Majeure 61

15.1 Definition....61
15.2 Notification Obligations....63
15.3 Duty to Mitigate 63

Article 16 Representations, Warranties and Covenants 63

16.1 Seller's Representations, Warranties and Covenants 63
16.2 EPE's Representations and Warranties 65

Article 17 Insurance....66

17.1 Evidence of Insurance 66
17.2 Term and Modification of Insurance....67
17.3 Endorsements and Other Requirements 67

Article 18 Legal and Regulatory Compliance 67

18.1 Applicable Laws....67
18.2 Governmental Approvals 68
18.3 [Reserved] 68
18.4 Compliance with Reliability Standards....68
18.5 Compliance Information....68

Article 19 Assignment and Other Transfer Restrictions 69

19.1 No Assignment Without Consent 69
19.2 Conditions on Transfers 70
19.3 Change of Control 70
19.4 Transfer Without Consent Is Null and Void 70
19.5 Subcontracting 70
19.6 Assignment to Lenders 70

Article 20 Credit and Security Requirements 71

20.1 Security 71
20.2 Form of Security 72
20.3 Grant of Security Interest 73
20.4 Use of Security 73

Article 21 Indemnity; Insurance Proceeds 74

21.1 Indemnification 74
21.2 Notice of Claims; Procedure 74
21.3 Survival of Obligations 75
21.4 Insurance Proceeds 75

Article 22 Allocation of Governmental Charges 76

22.1 Governmental Charges 76
22.2 Compliance Actions 76

Article 23 Incorporation of Federal Laws 78

23.1 EEO and Notice of Labor Rights 78
23.2 EEO Reporting 78
23.3 [Reserved] 78
23.4 Anti-Corruption Laws 78

Article 24 Confidentiality 79

24.1 Definition of Confidential Information 79
24.2 Duty to Maintain Confidentiality 81
24.3 Irreparable Injury; Remedies 82
24.4 Disclosure by Seller to Lenders, Etc. 82
24.5 Disclosure by EPE to Examiners, Etc. 82

Article 25 Miscellaneous 82

25.1 Waiver 82
25.2 Fines and Penalties 83
25.3 Rate Changes 83
25.4 Disclaimer of Certain Third Party Beneficiary Rights 83

25.5 Relationship of the Parties 83
25.6 Equal Employment Opportunity Compliance Certification 84
25.7 Survival of Obligations 84
25.8 Severability 84
25.9 Service Contract 84
25.10 Complete Agreement; Amendments 84
25.11 Binding Effect 85
25.12 Headings 85
25.13 Counterparts 85
25.14 Governing Law 85
25.15 Press Releases and Media Contact 85
25.16 Forward Contract Merchants 86
25.17 Accounting Matters 86
25.18 Telephone Recording 88

EXHIBITS

Exhibit A	Description of Energy Storage Facility and Site Map
Exhibit B	One-Line Diagram of Energy Storage Facility and Interconnection Facilities
Exhibit C	Description of Site
Exhibit D	Notice Addresses
Exhibit E	Seller's Required Governmental Authority Permits, Consents, Approvals, Licenses, and Authorizations to be Obtained
Exhibit F	Commissioning Tests and Annual Testing
Exhibit G	Insurance Coverages
Exhibit H	Expected Annual Degradation
Exhibit I	ESS Availability Guarantee
Exhibit J	Form of Seller Guaranty
Exhibit K	Commercial Operation Form of Certification
Exhibit L	Operating Limitations
Exhibit M	Delay Damage Rate

ENERGY STORAGE AGREEMENT

This Energy Storage Agreement, as may be amended from time to time, is entered into on as of November 18, 2024 ("***Execution Date***"), by and between:

1. **El Paso Electric Company**, a Texas corporation, whose principal place of business is 100 North Stanton Street, El Paso, Texas 79901 ("***EPE***"), and

2. **Santa Teresa Storage, LLC**, a Delaware limited liability company, whose principal place of business is 575 Fifth Avenue, 24th Floor, New York, New York 10017 ("***Seller***").

EPE and Seller may be referred to in this ESA individually as a "***Party***" and collectively as the "***Parties***."

RECITALS

A. EPE is a public utility that owns and operates electric generation, transmission, and distribution facilities and is subject to (i) the laws of the State of New Mexico and the rules and regulations of the New Mexico Public Regulation Commission and (ii) the laws of the State of Texas and the rules and regulations of the Public Utility Commission of Texas.

B. Seller desires to develop, design, construct, own and operate a battery energy storage facility, as further defined in this ESA and in Exhibit A.

C. Seller desires to sell and deliver to EPE the Product, and EPE agrees to buy the same from Seller, in accordance with the terms and conditions set forth in this ESA.

NOW, THEREFORE, in consideration of the mutual covenants herein contained, the sufficiency and adequacy of which are hereby acknowledged, the Parties agree to the following:

ARTICLE 1 DEFINITIONS AND RULES OF INTERPRETATION

1.1 Definitions

The following terms shall have the meanings set forth in this Section 1.1:

"***Abandonment***" means (a) a cessation of work and operations at the Energy Storage Facility for more than ninety (90) Days by Seller or Seller's contractors but only if such cessation is not in accordance with Prudent Utility Practices or caused by a Force Majeure Event, or (b) the relinquishment of possession and control of the Energy Storage Facility (or any material portion thereof) by Seller, other than a transfer permitted under this ESA.

"***AC***" means alternating electric current.

"***Accounting Standards***" has the meaning set forth in Section 25.17.

"***Additional Consents***" means the approvals, consents, authorizations, or other requirements not listed in the definition of Governmental Approvals in this ESA that are required from any Governmental Authority with respect to the Energy Storage Facility.

"***Affiliate***" of any named Person or entity means any other person or entity that controls, is under the control of, or is under common control with, the named entity. The term "control" (including the terms "controls", "under the control of", and "under common control with") means the possession, directly or indirectly, of the power to direct or cause the direction of the management and policies of a Person or entity, whether through ownership of fifty percent (50%) or more of the outstanding capital stock or other equity interests of any class of voting securities, by contract, or otherwise.

"***AGC***" stands for "Automatic Generation Control" and means energy management system equipment that accepts communications from the System Control Center and automatically adjusts the quantity of Charging Energy and Discharge Energy, including communication circuits to communicate operating information for the Energy Storage Facility to EPE's representatives on a real-time basis for the purpose of telemetering, supervisory control/data acquisition, and voice communications.

"***Agreed Compliance Costs***" has the meaning set forth in Section 22.2.2.

"***Ancillary Services***" means operating reserves, regulation, reactive supply, voltage control, contingency reserves, and other products associated with the storage of Energy, in each case that the Energy Storage Facility is capable of providing.

"***Anti-Corruption Laws***" has the meaning set forth in Section 23.4(a).

"***Applicable Law***" means all applicable laws, statutes, treaties, codes, ordinances, regulations, certificates, orders, licenses, and permits of any Governmental Authority, now in effect or hereafter enacted, amendments to any of the foregoing, interpretations of any of the foregoing by a Governmental Authority having jurisdiction over this ESA and matters related thereto, the Parties or the Energy Storage Facility, and all applicable judicial, administrative, arbitration and regulatory decrees, judgments, injunctions, writs, orders, awards, or like actions (including those relating to human health, safety, the natural environment, or otherwise).

"***Back-Up Metering***" has the meaning set forth in Section 5.3.4.

"***Bankruptcy Code***" means the United States Bankruptcy Code, 11 U.S.C. § 101 *et seq*., as amended from time to time.

"***Business Day***" means any calendar Day that is not a Saturday, a Sunday, or a state and/or federal recognized holiday where banks in El Paso, Texas, are permitted or authorized to close.

"***CAISO***" means the California Independent System Operator.

"***CAISO EIM***" means the California Independent System Operator Energy Imbalance Market or any successor thereto.

"***Change of Control***" means any circumstance in which Ultimate Parent ceases to own, directly or indirectly through one or more intermediate entities, at least fifty percent (50%) of the outstanding equity or voting interests in Seller; *provided,* that any equity or voting interests issued to a Tax Equity Investor shall be disregarded for purposes of calculating whether the Ultimate Parent continues to own at least fifty percent (50%) of the equity of, or voting interest in, Seller.

"***Charging Energy***" means Energy supplied by the Generating Facility at the Solar Charging Point (or, upon and following Seller's receipt of a Grid Charging Interconnection Agreement, by EPE at the Point of Delivery), in all cases in accordance with a Charging Notice and for the purpose of charging the ESS and discharging at a later time, as measured by the Electric Metering Devices, net of any estimated AC losses, based on a methodology agreed to by the Parties, between the Electric Metering Devices and the Point of Delivery that are not already reflected in the metered data.

"***Charging Notice***" means the operating instruction, and any subsequent updates, given by EPE to Seller, directing delivery of Charging Energy to the Solar Charging Point or Point of Delivery, as applicable; *provided*, that any such operating instruction and any such updates shall be in accordance with Prudent Utility Practices, the Operating Procedures, Operating Parameters, and Operating Limitations.

"***Code***" means the U.S. Internal Revenue Code of 1986, including applicable rules and regulations promulgated thereunder, as amended from time to time.

"***Commercial Operation***" means that (a) the ESS has been constructed, commissioned, tested, and proven capable of delivering a minimum of ninety percent (90%) of the Guaranteed ESS Capacity on a sustained basis without experiencing any abnormal or unsafe operating conditions on any interconnected system; (b) Seller has completed three (3) successful start-ups of the ESS without experiencing any abnormal operating conditions and has been available to dispatch continuously for a period of twenty-four (24) hours with controls in auto and synchronized to the EPE's system; (c) the ESS Unit Capabilities have been demonstrated through testing in accordance with applicable test protocols and procedures set forth in Exhibit F or by another method acceptable to EPE; (d) Seller is not in breach of the Interconnection Agreements; (e) Seller has achieved commercial operation under the Interconnection Agreements; (f) any testing of the Energy Storage Facility required to be performed under the Interconnection Agreements on or before the Commercial Operation Date has been performed in accordance with

the requirements of the Interconnection Agreements; (g) the Shared Facilities Agreement has been accepted for filing by FERC (if required by FERC) and is in full force and effect, and Seller is not in breach of the Shared Facilities Agreement; (h) all Seller required permits, required consents, and Governmental Approvals are in full force and effect; (i) Seller has obtained required insurance coverage as set forth in this ESA; (j) Operating Procedures have been finalized and agreed to between the Parties consistent with Section 10.5.1; and (k) final Operating Limitations have been agreed to by the Parties and Exhibit L has been updated accordingly. For the avoidance of doubt, obtaining approval from NMPRC for the execution and performance of this ESA shall not be a condition precedent to achieving Commercial Operation.

"***Commercial Operation Date***" means the date on which Seller submits to EPE (a) a written certification from an officer of Seller that Commercial Operation has commenced, (b) a certification from a Licensed Professional Engineer, substantially in the form attached hereto as Exhibit K, and all fees and costs associated with the Licensed Professional Engineer shall be borne by Seller, and (c) Seller shall have delivered the Delivery Term Security to EPE in accordance with Article 20.

"***Commercial Operation Year***" means a period of twelve (12) consecutive Months; *provided,* that the first Commercial Operation Year shall commence on the Commercial Operation Date and end on the last Day of the Month that is twelve (12) full Months after the Commercial Operation Date, and each subsequent Commercial Operation Year shall be the twelve (12) Month period commencing at the end of the prior Commercial Operation Year.

"***Commissioning Tests***" has the meaning set forth in Section 10.2.

"***Compliance Actions***" has the meaning set forth in Section 22.2.1.

"***Compliance Cost Cap***" has the meaning set forth in Section 22.2.1.

"***Confidential Information***" has the meaning set forth in Section 24.1.

"***Contract Value***" means the present value of the ESS Capacity Payments for each Commercial Operation Year (or portion thereof) remaining in the Term, determined without reference to the early termination, of (a) the quantity of the Installed ESS Capacity expected to be made available during such Commercial Operation Year (or portion thereof), multiplied by (b) the ESS Capacity Payment Rate for such Commercial Operation Year. All elements of the foregoing calculation shall be determined in a commercially reasonable manner. The present values of the monthly payments from their payment dates in the foregoing calculation shall be determined using a discount factor equal to the latest weighted average cost of capital as reported in the then-most recent NMPRC Rule 510 Annual Reporting filing.

"***COVID-19***" means the disease named coronavirus disease 2019 (COVID-19) by the World Health Organization and caused by the virus named Severe Acute Respiratory Syndrome

Coronavirus 2 (SARS-CoV-2) by the International Committee on Taxonomy of Viruses and any mutations thereof.

"***Damage Rate***" means the damage rate (in $ / MW-Day) set forth in Exhibit M for each Day during which Delayed ESS Capacity exists, subject to Section 3.7.

"***Day***" means a calendar day and includes Saturdays, Sundays, and holidays; if a payment falls due on a Day that is not a Business Day, the payment will be due on the next Business Day thereafter.

"***DC***" means direct current.

"***Default Rate***" has the meaning set forth in Section 9.4.

"***Defaulting Party***" means the Party with respect to which an Event of Default under Article 13 has occurred.

"***Delay Damages***" has the meaning set forth in Section 3.7.

"***Delayed ESS Capacity***" means, as of the determination date, the difference between (i) the Guaranteed ESS Capacity minus (ii) the Installed ESS Capacity.

"***Delivery Term***" has the meaning set forth in Section 7.1.

"***Delivery Term Security***" has the meaning set forth in Section 20.1.2(b).

"***Development Security***" has the meaning set forth in Section 20.1.1(b).

"***Discharge Energy***" means Energy discharged from the ESS in accordance with a Discharging Notice and delivered at the Point of Delivery, as measured by the Electric Metering Devices, corrected for any estimated AC losses to the Point of Delivery, based on a methodology agreed to by the Parties.

"***Discharging Notice***" means the operating instruction, and any subsequent updates, given by EPE to Seller directing the Energy Storage Facility to deliver Discharge Energy; *provided*, that any such operating instruction and any such updates shall be in accordance with Prudent Utility Practices, the Operating Procedures, Operating Parameters, and Operating Limitations.

"***Disclosing Party***" has the meaning set forth in Section 24.1(a).

"***Dispute Notice***" has the meaning set forth in Section 14.8.

"***Disputing Party***" has the meaning set forth in Section 9.5.1.

"***Dollars***" means the lawful currency of the United States of America.

"***Downgrade Event***" shall mean that the long-term credit rating of a Person's long-term senior unsecured debt is not "Baa2" or higher by Moody's or "BBB" or higher by S&P.

"***Early Termination Date***" has the meaning set forth in Section 13.4.

"***Electric Interconnection Point***" means the physical point at which electrical interconnection is made between the Energy Storage Facility and the Transmission Provider's Transmission System.

"***Electric Metering Device(s)***" means all metering and data processing equipment used to measure, record, or transmit data relating to Charging Energy and Discharge Energy. Electric Metering Devices include the metering current transformers and the metering voltage transformers.

"***Emergency Condition***" means (a) a condition or situation that presents an imminent physical threat of danger to life, health, or property, and/or could reasonably be expected in the opinion of the Transmission Provider to cause a significant disruption to the Transmission Provider's Transmission System or otherwise be required in accordance with the requirements of the Reliability Coordinator and/or NERC/WECC operating policies and criteria, or (b) any system condition not consistent with Prudent Utility Practices. Emergency Condition shall include any condition that is considered an "Emergency" as defined by NERC in the Glossary of Terms Used in NERC Reliability Standards, as may be amended from time to time.

"***Energy***" means three-phase, 60-cycle alternating current electric energy, expressed in units of kWh or MWh, delivered to or received from the Energy Storage Facility, in each case at a nominal voltage at the Point of Delivery, as measured by Electric Metering Devices.

"***Energy Storage Facility***" means Seller's energy storage facility, located in Doña Ana County, New Mexico, with a designed maximum power charge and discharge capability of the Guaranteed PMAX, which is commonly referred to as the Santa Teresa Energy Storage Project, as further identified and described in Article 3 and Exhibit A, including all of the following (and any additions, modifications or replacements), the purpose of which is to store electricity and deliver such electricity to EPE at the Point of Delivery: Seller's equipment, buildings, all of the conversion facilities, including the Energy Storage Systems, step-up transformers, output breakers, rights to access and use Seller's Interconnection Facilities necessary to connect the ESS to the Electric Interconnection Point, protective and associated equipment, improvements, and other tangible assets, contract rights, easements, rights of way, surface use agreements and other interests or rights in real estate reasonably necessary for the construction, operation, and maintenance of the energy storage facilities that make Product available subject to this ESA.

"***Energy Storage Facility Manager***" has the meaning set forth in Section 10.1.4.

"***Energy Storage Services***" means the acceptance of Charging Energy at the Solar Charging Point (or, upon and following Seller's receipt of a Grid Charging Interconnection Agreement, at the Point of Delivery), the storing of Energy in the Energy Storage Facility, and the delivery of Discharge Energy from the Energy Storage Facility at the Point of Delivery, all in accordance with EPE's Charging Notices and Discharging Notices, in compliance with the ESS Unit Capabilities, and subject to the terms and conditions of this ESA (including the Operating Parameters, Operating Procedures and Operating Limitations).

"***Energy Storage System***" or "***ESS***" means the battery arrays, battery system controller, inverters, transformers, thermal management system, and other equipment necessary to charge, store, and subsequently deliver electricity from the Energy Storage Facility to the Point of Delivery.

"***Environmental Attributes***" means all attributes, aspects, characteristics, claims, credits, benefits, reductions, offsets, or allowances of an environmental nature that are created or otherwise arise from the Energy Storage Facility's delivery of electricity from renewable energy resources in contrast with the generation of electricity using nuclear or fossil fuels or other traditional resources. Forms of such attributes include any and all environmental air quality credits, green credits, including carbon credits, emissions reduction credits, certificates, tags, offsets, allowances, or similar products or rights, howsoever entitled, (i) resulting from the avoidance of the emission of any gas, chemical, or other substance, including mercury, nitrogen oxide, sulfur dioxide, carbon dioxide, carbon monoxide, particulate matter or similar pollutants or contaminants of air, water or soil, gas, chemical, or other substance, and (ii) attributable to the generation, purchase, sale, or use of Energy. Environmental Attributes include those currently existing or arising during the Delivery Term under local, state, regional, federal, or international legislation or regulation relevant to the avoidance of any emission described above under any governmental, regulatory, or voluntary program, including the United Nations Framework Convention on Climate Change and related Kyoto Protocol or other programs, laws, or regulations. Environmental Attributes include the reporting rights related to any such attributes, aspects, characteristics, claims, credits, benefits, reductions, offsets, or allowances, including the right of a Person to report the ownership thereof in compliance with federal or state law, if applicable, or otherwise to a federal or state agency or any other Person. Environmental Attributes specifically exclude (i) Tax Benefits, and (ii) any Energy, reliability, or other power attributes from the Energy Storage Facility.

"***Environmental Contamination***" means the introduction or presence of Hazardous Materials at such levels, quantities, or location, or of such form or character, as to constitute a violation of federal, state, or local laws or regulations, and present a material risk under federal, state, or local laws and regulations that a Site will not be available or usable, whether in whole or in part, for the purposes contemplated by this ESA.

"***EPE***" has the meaning set forth in the introductory paragraph of this ESA.

"***EPE Costs***" means (a) brokerage fees, commissions, and other similar third party transaction costs and expenses reasonably incurred and documented by EPE either in terminating any arrangement pursuant to which it has hedged its obligations under this ESA or entering into new arrangements which replace this ESA; and (b) all reasonable attorneys' fees and expenses incurred by EPE in connection with the termination of this ESA, to the extent such costs are not already accounted for under Replacement ESS Costs.

"***EPE Requested Capacity Test***" has the meaning set forth in Section 10.9.5.

"***EPE Termination Payment***" means the sum of (a) the aggregate of all amounts then owed from Seller to EPE less any amounts owed from EPE to Seller, plus (b) the positive difference, if any, between (i) the net present value of the Replacement ESS Costs and (ii) the Contract Value, plus (c) reasonable EPE Costs all using a discount factor equal to the latest weighted average cost of capital as reported in the then-most recent NMPRC Rule 510 Annual Reporting filing. Any such calculations will be based on reasonable assumptions as to future Energy Storage Facility operations, differences between a replacement contract and this ESA, and similar considerations. The EPE Termination Payment does not include consequential incidental, punitive, exemplary, indirect, or business interruption damages.

"***EPE Tested Capacity***" has the meaning set forth in Section 10.9.5.

"***ESA***" or "***Energy Storage Agreement***" means this Energy Storage Agreement between Seller and EPE, including the Exhibits and Schedules attached hereto, as the same may be amended from time to time in accordance with the provisions hereof.

"***Equivalent Full Cycle***" means the equivalent of a full ESS charge/discharge cycle with the associated delivery of Discharge Energy equivalent to the Installed ESS Capacity over a four (4) hour duration. An Equivalent Full Cycle occurs when the quotient of the following equation is equal to one (1.00):

(a) the total Discharge Energy over a period of time, regardless of the depth of battery discharge or quantity of partial charges/discharges, divided by

(b) the product of

(1) the Installed ESS Capacity, multiplied by

(2) four (4) hours.

"***ESS Availability Damages***" has the meaning set forth in Exhibit I.

"***ESS Capacity Payment***" has the meaning set forth in Section 8.1(a).

"***ESS Capacity Payment Rate***" means the price to be paid by EPE to Seller for Product made available by the Energy Storage System, as set forth in this ESA and as may be adjusted pursuant to Section 8.1(b).

"***ESS Roundtrip Efficiency***" means the ratio of the delivered Discharge Energy to the delivered Charging Energy, in each case as measured at the PCS input/output terminals and determined annually in accordance with applicable test protocols and procedures set forth in Exhibit F.

"***ESS Unit Capabilities***" has the meaning set forth in Section 3.12.

"***Event of Default***" means a Seller Event of Default as set forth in Section 13.1 or an EPE Event of Default as set forth in Section 13.2.

"***Execution Date***" has the meaning set forth in the introductory paragraph of this ESA.

"***Expected Commercial Operation Date***" has the meaning set forth in Section 3.1.

"***Fair Market Value***" has the meaning set forth in Section 12.2.1.

"***Federal Power Act***" means the Federal Power Act, as amended, 16 U.S.C. § 791a *et seq*.

"***FERC***" means the Federal Energy Regulatory Commission or any successor agency.

"***Final Option Notice***" has the meaning set forth in Section 12.3.1.

"***FNTP Date***" means the date on which the primary construction contractor or vendor with respect to the Energy Storage Facility receives a full notice to proceed pursuant to the applicable engineering, procurement and/or construction or other similar agreement entered into with respect to the Energy Storage Facility.

"***Force Majeure Event***" has the meaning set forth in Section 15.1.1.

"***GAAP***" has the meaning set forth in Section 25.17.

"***Generating Facility***" means the co-located One Hundred Fifty (150) MW_{AC} solar generating facility owned by Seller Solar Affiliate and consisting of photovoltaic arrays, tracking devices, inverters, transformers, and other equipment necessary to collect sunlight and convert it into electricity which, among other things, will be used to charge the ESS at the Solar Charging Point per EPE's dispatch elections.

"***Governmental Approval***" means any authorization, consent, permission, approval, license, ruling, permit, exemption, variance, order, judgment, instruction, condition, direction, directive, decree, declaration of, or regulation by any Governmental Authority relating to the

construction, development, ownership, occupation, startup, testing, operation, or maintenance of the Energy Storage Facility or to the execution, delivery, or performance of this ESA or the procurement pursuant to this ESA of renewable energy and Renewable Energy Certificates and shall also mean, where and as applicable and the context so dictates, any and all authorization, consent, permission, approval, license, ruling, permit, exemption, variance, order, judgment, instruction, condition, direction, directive, decree, declaration of, or regulation with regard to any Non-Governmental Compliance Obligations.

"***Governmental Authority***" means (a) any federal, state, local, or municipal governmental body; (b) any governmental, quasi-governmental, regulatory, or administrative agency, commission, body, or other authority exercising or entitled to exercise any administrative, executive, judicial, legislative, policy, regulatory, or taxing authority or power; or (c) any court or governmental tribunal.

"***Governmental Charges***" means any Taxes, charges or costs that are assessed or levied by any Governmental Authority or other Person, including local, state, or federal regulatory or taxing authorities that would affect the sale and purchase of Product contemplated by this ESA, either directly or indirectly.

"***Government Officials***" has the meaning set forth in Section 23.4(d).

"***Grid Charging Interconnection Agreement***" has the meaning set forth in Section 3.11.

"***Guaranteed Charge Ramp Rate***" has the meaning set forth in Section 3.12.

"***Guaranteed Discharge Ramp Rate***" has the meaning set forth in Section 3.12.

"***Guaranteed ESS Capacity***" has the meaning set forth in Section 3.12 and shall be valid for the full duration of this ESA with an annual degradation as set forth in Section 3.12.

"***Guaranteed ESS Capacity Shortfall Damages***" has the meaning set forth in Section 3.8.

"***Guaranteed ESS Roundtrip Efficiency***" has the meaning set forth in Section 3.12.

"***Guaranteed PMAX***" has the meaning set forth in Section 3.12.

"***Hazardous Materials***" means any substance, material, gas, or particulate matter that is regulated by any local Governmental Authority, any applicable state, or the United States of America as an environmental pollutant or dangerous to public health, public welfare, or the natural environment including, without limitation, protection of non-human forms of life, land, water, groundwater, and air, including any material or substance that is (a) defined as "toxic," "polluting," "hazardous waste," "hazardous material," "hazardous substance," "extremely hazardous waste," "solid waste," or "restricted hazardous waste" under any provision of local, state, or federal law; (b) petroleum, including any fraction, derivative, or additive; (c) asbestos; (d) polychlorinated

biphenyls; (e) radioactive material; (f) designated as a "hazardous substance" pursuant to the Clean Water Act, 33 U.S.C. § 1251 *et seq*.; (g) defined as a "hazardous waste" pursuant to the Resource Conservation and Recovery Act, 42 U.S.C. § 6901 *et seq*.; (h) defined as a "hazardous substance" pursuant to the Comprehensive Environmental Response, Compensation, and Liability Act, 42 U.S.C. § 9601 *et seq*.; (i) defined as a "chemical substance" under the Toxic Substances Control Act, 15 U.S.C. § 2601 *et seq*.; or (j) defined as a "pesticide" under the Federal Insecticide, Fungicide, and Rodenticide Act, 7 U.S.C. § 136 *et seq*.

"***House Energy***" has the meaning set forth in Section 1.4.

"***Import Restriction Action***" means any import-related or customs-related action by a Governmental Authority that directly or indirectly, delays, prevents, restricts, or limits the delivery of any equipment or merchandise procured by Seller to be used in or for the Energy Storage Facility, including, without limitation, a U.S. Customs and Border Protection withhold release order, issuance of a CF28 or CF29 instrument, seizure or detention of merchandise to be or in the process of being imported, the prohibition from entry into a country of any goods, or any enforcement action.

"***Installed ESS Capacity***" means the power (expressed in MW as measured at the Point of Delivery) that can be discharged from the ESS for four (4) consecutive hours when starting from one hundred percent (100%) state of charge, as determined in accordance with the test protocols and procedures set forth in Section 10.9 and Exhibit F.

"***Interconnection Agreements***" means the (i) the Standard Large Generator Interconnection Agreement, effective as of June 9, 2022, between Seller Solar Affiliate and the Transmission Provider; (ii) the Standard Large Generator Interconnection Agreement, effective as of October 17, 2022, between Seller Solar Affiliate (as successor-in-interest to Hecate Energy Santa Teresa 2 LLC) and the Transmission Provider, and (iii) if not captured within (i) and (ii) above, and once executed and effective, the Grid Charging Interconnection Agreement, each of (i) through (iii) for interconnection of the Energy Storage Facility to the Transmission Provider's Transmission System, as each such agreement may be amended from time to time.

"***Interconnection Delay***" has the meaning set forth in Section 3.6.1(a).

"***Interconnection Facilities***" means the Transmission Provider's Interconnection Facilities and Seller's Interconnection Facilities.

"***Issuer Minimum Requirements***" has the meaning set forth in Section 20.2.1(b).

"***ITC(s)***" means the investment tax credits established pursuant to Sections 48 or 48E of the Code, or any successor Code section.

"***J.P. Morgan***" has the meaning set forth in Section 24.2.2.

"***kW***" means one or more kilowatts AC of electricity, as the context requires.

"***kWh***" means kilowatt hour AC.

"***Lender(s)***" means any and all Persons (including any trustee or agent acting on behalf of such Person), including Affiliates of Seller, (a) lending money or extending credit (including any financing lease, monetization of Tax Benefits, back-leverage or pay-go financing, Tax Equity Financing, or credit derivative arrangement) to Seller or to an Affiliate of Seller: (i) in connection with the development, construction, ownership, operation or maintenance of the Energy Storage Facility; (ii) for working capital or other ordinary business requirements of the Energy Storage Facility (including the maintenance, repair, replacement, or improvement of the Energy Storage Facility); (iii) for any development financing, bridge financing, credit support, credit enhancement, or interest rate protection in connection with the Energy Storage Facility; (iv) for any capital improvement or replacement related to the Energy Storage Facility; or (v) for the purchase of the Energy Storage Facility and the related rights from Seller; (b) participating as a Tax Equity Investor in the Energy Storage Facility; (c) purchasing tax credits arising from or in connection with the Energy Storage Facility; (d) any lessor under a lease finance arrangement relating to the Energy Storage Facility; or (e) any hedge provider (including any energy price hedge provider).

"***Letter of Credit***" means an irrevocable, unconditional, transferable standby letter of credit for the benefit of the receiving Party, issued by an entity meeting the Issuer Minimum Requirements.

"***Licensed Professional Engineer***" means an independent, professional engineer reasonably acceptable to EPE, licensed in the State of New Mexico, and otherwise qualified to perform the work required by this ESA.

"***Lithium Carbonate Contract Price Adjustment Calculation***" means the following calculation:

B = (2.20 x (Lithium Price – 75,000 RMB/mt) x E) / 100,000

Where:

B = ESS Capacity Payment Rate increase (if positive) or ESS Capacity Payment Rate decrease (if negative)

E = Chinese renminbi to Dollar currency exchange ratio during the applicable calculation period

"***Lithium Price***" has the meaning set forth in Section 8.1(b)(1).

"***Local Provider***" has the meaning set forth in Section 1.4.

"***Losses***" has the meaning set forth in Section 21.1.1.

"***Major Equipment***" means the transformers and inverters associated with, or incorporated into, the Energy Storage Facility.

"***Month***" means a calendar month.

"***Monthly Billing Period***" means the period during any particular Month in which Product has been made available at the Point of Delivery for sale to EPE, whether or not occurring prior to or subsequent to the Commercial Operation Date.

"***Monthly Electricity Storage Cost***" means, for a Monthly Billing Period, the sum of

(i) the product of (a) the quantity of Charging Energy sourced from the Generating Facility during such month, times (b) the Solar Energy Output Payment Rate (as such term is defined in the PPA), plus

(ii) following Seller's receipt of a Grid Charging Interconnection Agreement, the product of (a) the quantity of Charging Energy sourced from the grid during such month, times (b) the five-minute, real time price of energy as determined at the Palo Verde Trading Hub for the corresponding delivery periods.

"***Moody's***" means Moody's Investor Services, Inc. and any successor thereto.

"***Mountain Prevailing Time***" or "***MPT***" means the time in effect in the Mountain Time Zone of the United States of America, whether Mountain Standard Time or Mountain Daylight Saving Time.

"***MW***" means megawatt or one thousand (1,000) kW AC.

"***MWh***" means megawatt hours AC.

"***NERC***" means the North American Electric Reliability Corporation or any successor organization.

"***NMPRC***" means the New Mexico Public Regulation Commission or any successor agency.

"***NMPTC***" means any state or local production tax credit or investment tax credit determined by reference to renewable electric energy produced from renewable energy resources in effect in the state of New Mexico.

"***NMPTC Statute***" means New Mexico statute 7-2-18.18 NMSA 1978.

"***Non-Defaulting Party***" means the Party other than the Defaulting Party with respect to an Event of Default that has occurred under Article 13.

"***Non-Governmental Compliance Obligations***" means all necessary filings, applications, accreditations, registrations, and/or other requirements including deposits, fees, accounts, and/or other obligations with WREGIS, NERC, WECC, and all other applicable agencies, self-regulatory organizations, and industry committees to which the Party is required to have membership and/or submit to jurisdiction in the performance of this ESA.

"***OATT***" means Open Access Transmission Tariff.

"***Operating Limitations***" means the limitations set forth in Exhibit L.

"***Operating Parameters***" has the meaning set forth in Section 10.4.1.

"***Operating Procedures***" means those procedures developed pursuant to Section 10.5.

"***Operating Records***" means the final version of all operating logs, blueprints for construction, operating manuals, warranties on equipment, and other documents related to the manufacture and installation of the ESS and generator step-up transformer, material engineering drawings, and environmental permits, plans, and studies, whether in printed or electronic format, that Seller uses or maintains for the operation of the Energy Storage Facility.

"***Option***" has the meaning set forth in Section 12.1.

"***Outage Notice***" has the meaning set forth in Section 7.5.1.

"***Outside Commercial Operation Date***" has the meaning set forth in Section 3.1.

"***Party***" or "***Parties***" has the meaning set forth in the introductory paragraph of this ESA and includes any permitted assignee of a Party.

"***PCS***" or "***Power Conditioning System***" means the Energy Storage System power conditioning system utilized to convert electric power from one form to another (AC to DC, DC to AC, and/or between different voltage levels), and to condition the power quality to what is needed by the interconnected systems.

"***Permitted Transferee***" means any Person that (a) is a Lender or assignee or transferee of such Lender that is itself a Person that satisfies the requirements of clause (b)(i) of this definition, or retains another Person to operate the Energy Storage Facility and that Person satisfies the requirements of clause (b)(i) of this definition, or (b) (i) individually or together with its Affiliates owns or operates, or has retained a Person to operate the Energy Storage Facility that has at least two (2) years' experience with operating battery energy storage systems, and (ii) individually or

together with its Affiliates has a consolidated net worth of at least One Hundred Million Dollars ($100,000,000).

"***Person***" means any natural person, corporation, limited liability company, general partnership, limited partnership, proprietorship, other business organization, trust, union, association, or Governmental Authority.

"***Point of Delivery***" means the electric system point at which Seller makes available to EPE the Product being provided by Seller to EPE under this ESA. The Point of Delivery shall be specified in Section 3.1 and Exhibit B.

"***PPA***" means the Power Purchase Agreement, dated as of the date hereof, by and between Seller Solar Affiliate and EPE relating to the Generating Facility, including the Exhibits and Schedules attached thereto, as the same may be amended from time to time in accordance with the provisions thereof.

"***Preliminary Option***" has the meaning set forth in Section 12.1.

"***Product***" means all Energy Storage Services, Environmental Attributes, Ancillary Services, all to the extent made available by the Energy Storage Facility and delivered for EPE's exclusive use pursuant to the terms of this ESA.

"***Prudent Utility Practice(s)***" means the practices, methods, and acts (including the practices, methods, and acts engaged in or approved by a significant portion of the battery storage system industry serving public utilities, WECC and/or NERC) that, at a particular time, in the exercise of reasonable judgment in light of the facts known or that should reasonably have been known at the time a decision was made, would have been expected to accomplish the desired result in a manner consistent with law, regulation, permits, codes, standards, reliability, safety, environmental protection, economy, and expedition. With respect to the Energy Storage Facility, Prudent Utility Practice(s) includes taking reasonable steps to ensure that:

(a) equipment, materials, resources, and supplies, including spare parts inventories, are available to meet the Energy Storage Facility's needs;

(b) sufficient operating personnel are available at all times and are adequately experienced and trained and licensed as necessary to operate the Energy Storage Facility properly, efficiently, and in coordination with EPE and are capable of responding to reasonably foreseeable Emergency Conditions whether caused by events on or off the Site;

(c) preventive, routine, and non-routine maintenance and repairs are performed on a basis that ensures reliable, long-term and safe operation, and are performed by knowledgeable, trained, and experienced personnel utilizing proper equipment and tools;

(d) appropriate monitoring and testing are performed to ensure equipment is functioning as designed;

(e) equipment is not operated in a reckless manner, or in a manner unsafe to workers, the general public, or the interconnected system or contrary to environmental laws, permits or regulations or without regard to defined limitations, such as flood conditions, safety inspection requirements, operating voltage, current, volt-ampere reactive ("***VAr***") loading, frequency, rotational speed, polarity, synchronization, and/or control system limits;

(f) equipment and components meet or exceed the standard of durability that is generally used for similar battery storage systems serving public utilities in the region and will function properly over the full range of ambient temperature and weather conditions reasonably expected to occur at the Site and under both normal and Emergency Conditions; and

(g) equipment, components, and processes are appropriately permitted with any local, state, or federal Governmental Authority and are operated and maintained in accordance with applicable permit and regulatory requirements.

"***Qualified Operator***" is (a) a Person that has at least two (2) years' experience with operating battery energy storage systems, or (b) any other Person reasonably acceptable to EPE.

"***Receiving Party***" has the meaning set forth in Section 24.1(a).

"***Receiving Party Representatives***" has the meaning set forth in Section 24.2.2.

"***Recording***" has the meaning set forth in Section 25.18.

"***Reliability Coordinator***" means the entity that fulfills the duties of the Reliability Coordinator, as defined by NERC and as delegated by WECC, for its Reliability Coordinator Area in the Western Interconnection. As of the Execution Date, Southwest Power Pool is the Reliability Coordinator.

"***Reliability Coordinator Area***" means the collection of generation, transmission, and loads within the boundaries of the Reliability Coordinator.

"***Replacement ESS Costs***" means the actual costs incurred by EPE following an Event of Default that are reasonable and necessary to replace Product which Seller, in accordance with this ESA, would have made available to EPE, but failed to so provide pursuant to this ESA. EPE shall not have to enter into a replacement contract to establish the Replacement ESS Costs. If EPE does not enter into a replacement contract, then the Replacement ESS Costs will be based on the market price for any comparable ESS Unit Capabilities, Environmental Attributes and Ancillary Services delivered to EPE's system by the Energy Storage Facility, as reasonably agreed by EPE and Seller.

In calculating such amounts, the Parties will comply with the requirements set forth in Section 13.4.1 in establishing the market price. Replacement ESS Costs for a Seller Event of Default shall also include EPE's reasonable outside attorneys' fees incurred in connection with entering into a replacement contract.

"***Requested Actions***" has the meaning set forth in Section 18.3.

"***Return Amount***" has the meaning set forth in Section 12.1.

"***S&P***" means Standard & Poor's Corporation and any successor thereto.

"***Scheduled Maintenance Outage***" means a time during which the ESS is shut down or its output is reduced to undergo scheduled maintenance in accordance with this ESA, or as otherwise agreed by Seller and EPE.

"***SEC***" has the meaning set forth in Section 25.17.

"***Security***" means Development Security or Delivery Term Security, as applicable.

"***Seller***" has the meaning set forth in the introductory paragraph of this ESA.

"***Seller Compliance Costs***" has the meaning set forth in Section 22.2.1.

"***Seller Excused Hours***" means those hours during which Seller is unable to make available Product as a result of: (a) a Scheduled Maintenance Outage, (b) a Force Majeure Event, (c) following Seller's receipt of a Grid Charging Interconnection Agreement, a failure of EPE to provide Charging Energy at times when grid charging is permitted to occur under the Grid Charging Interconnection Agreement, (d) any failure by EPE to perform a material obligation under this ESA (other than due to a breach by Seller of its obligations under this ESA), (e) insufficient state of charge, (f) Seller Forced Outage, or (g) failure of any Major Equipment.

"***Seller Forced Outage***" means an unplanned reduction, interruption or suspension of all or a portion of Product from the Energy Storage Facility to the Point of Delivery in an amount of at least five (5) MW not associated with Seller Excused Hours.

"***Seller Guarantor***" means either (a) D. E. Shaw Renewable Investments, L.L.C., a Delaware limited liability company, or (b) any other Person (i) having a credit rating on such Person's long-term senior unsecured debt that is "Baa3" or higher by Moody's or "BBB-" or higher by S&P or insurance rating AM Best A- or better or (ii) reasonably acceptable to EPE.

"***Seller Guaranty***" means a guaranty in substantially the form attached as Exhibit J.

"***Seller Permitted Transfer***" means any of the following: (a) a Change of Control of Seller; (b) the direct or indirect transfer of shares of, or equity interests or other ownership interests in,

Seller or a direct or indirect parent thereof to a Lender (or the subsequent transfer, assignment, or acquisition of such interest) in connection with any Tax Equity Financing; (c) a transfer of: (i) all or substantially all of the assets of Seller's Ultimate Parent in a single transaction; or (ii) all or substantially all of Seller's Ultimate Parent's solar generation portfolio in a single transaction; (d) in connection with a Lender's exercise of remedies under its financing agreements for the Energy Storage Facility, the direct or indirect transfer of shares of, or equity interests or other ownership interests in, Seller (or the subsequent transfer, assignment, or acquisition of such interest, in each case including a Change of Control), or assignment of this ESA or any of Seller's rights or obligations under this ESA; or (e) any transfer or assignment to, or acquisition by, a Permitted Transferee of shares of, or equity interests or other ownership interests in, Seller; *provided*, that in the case of each of clauses (a) and (d) of this definition, following such transfer (A) the entity that operates the Energy Storage Facility is a Qualified Operator or retains, prior to the date of such transfer, a Qualified Operator to operate the Energy Storage Facility (or otherwise agrees not to interfere with the existing Qualified Operator for the Energy Storage Facility), and (B) Seller continues to comply with the obligations to provide Development Security or Delivery Term Security, as applicable, in accordance with Article 20.

"***Seller Solar Affiliate***" means Santa Teresa Solar, LLC, a Delaware limited liability company.

"***Seller Termination Payment***" means the sum of (a) the aggregate of all amounts then owed from EPE to Seller, less any amounts owed from Seller to EPE, plus (b) the positive difference, if any, between (i) the Contract Value, and (ii) the net present value of the payments that can reasonably be expected to be applicable in the market under a replacement contract covering the same products (i.e., Product), plus (c) Seller's reasonable transactional costs of entering into a new supply or sales arrangement all using a discount factor equal to the latest weighted average cost of capital as reported in the then-most recent NMPRC Rule 510 Annual Reporting filing. Any such calculations will be based on reasonable assumptions as to future Energy Storage Facility operations, differences between a replacement contract and this ESA and similar considerations. The Seller Termination Payment does not include consequential, incidental, punitive, exemplary or indirect or business interruption damages.

"***Seller's Financial Statements***" has the meaning set forth in Section 25.17(b).

"***Seller's Interconnection Facilities***" means "Interconnection Customer's Interconnection Facilities" as defined in the Interconnection Agreements. Seller's Interconnection Facilities are conceptually depicted in Exhibit B.

"***Shared Facilities Agreement***" means that certain agreement among Seller Solar Affiliate and Seller as expressly contemplated under the terms of the Interconnection Agreements.

"***Site***" means the parcel or parcels of real property on which the Energy Storage Facility will be constructed and located, including any easements, rights of way, surface use agreements,

and other interests or rights in real estate reasonably necessary for the construction, operation, and maintenance of the Energy Storage Facility. The Site for the Energy Storage Facility is more specifically described in Section 3.3 and Exhibit C. For the avoidance of doubt, this ESA is Site specific.

"***Solar Charging Point***" means the electric system points at which the Generating Facility delivers Energy to the Energy Storage Facility for purposes of charging the Energy Storage Facility.

"***Supply Chain Event***" means any delay in Seller's performance of its obligations hereunder arising out of any Import Restriction Action applicable to the equipment or merchandise procured by Seller (or arranged for procurement by Seller) to be used in or for the Energy Storage Facility and that arises after Seller has procured or arranged for the procurement of such equipment or merchandise to be used in or for the Energy Storage Facility.

"***System Control Center***" or "***SCC***" means EPE's representative(s) responsible for dispatch of the ESS.

"***Tax Benefits***" means (a) federal and state investment and/or production tax credits (including ITCs but excluding NMPTCs), and any other tax credits which are or will be generated with respect to the ownership or operation of any portion of the Energy Storage Facility, (b) any cash payments or outright grants of money provided by a Governmental Authority or non-Governmental Authority in lieu of such tax credits, and (c) depreciation deductions and depreciation benefits, and any other tax benefits arising from the ownership or operation of any portion of the Energy Storage Facility.

"***Tax Equity Financing***" means, with respect to Seller or an upstream equity owner of Seller, any transaction or series of transactions (including, without limitation, any transaction of the type described in this definition that utilizes a lease or inverted lease structure) resulting in a portion of the membership interests in Seller or an upstream equity owner, as applicable, being issued or otherwise provided to another Person (a "***Tax Equity Investor***") in exchange for capital contributions or other forms of payment to Seller or such upstream equity owner, as applicable, or the Energy Storage Facility being sold to and leased by Seller from a Tax Equity Investor, in either case for the purpose of raising a portion of the funds needed to finance the Energy Storage Facility by monetizing the Tax Benefits associated with the Energy Storage Facility.

"***Tax Equity Investor***" has the meaning set forth in the definition of Tax Equity Financing.

"***Taxes***" means all taxes, fees, levies, licenses, or charges imposed by any Governmental Authority, other than taxes, levies, licenses, or charges based upon net income or net worth as set forth in more detail in Section 9.7.

"***Term***" has the meaning set forth in Article 2.

"***Termination Payment***" means the EPE Termination Payment or the Seller Termination Payment, as applicable.

"***Test Period***" means the period commencing on the Day the Energy Storage Facility is energized, operates in parallel with the Transmission Provider's Transmission System and is available to receive Charging Energy from the Generating Facility at the Solar Charging Point (or, upon and following Seller's receipt of a Grid Charging Interconnection Agreement, Charging Energy from EPE at the Point of Delivery), and deliver Discharge Energy to the Point of Delivery and ending on the Commercial Operation Date.

"***Transmission Provider***" means EPE, EPE's designated agent, or a third party acting in its capacity owning, controlling, or operating facilities used for the transmission of electric energy in interstate commerce and providing transmission service under the OATT and any successor entity, if applicable.

"***Transmission Provider's Interconnection Facilities***" means the facilities necessary to connect the Transmission Provider's Transmission System to the Electric Interconnection Point, including breakers, bus work, bus relays, and associated equipment installed by the Transmission Provider for the direct purpose of physically and electrically interconnecting the Energy Storage Facility, along with any easements, rights of way, surface use agreements and other interests or rights in real estate reasonably necessary for the construction, operation and maintenance of such facilities. Arrangements for the installation and operation of the Transmission Provider's Interconnection Facilities shall be governed by the Interconnection Agreements.

"***Transmission Provider's Transmission System***" means the contiguously interconnected electric transmission facilities over which the Transmission Provider has rights to provide bulk transmission of capacity and energy from the Electric Interconnection Point.

"***Ultimate Parent***" means DESRI Holdings, L.P., a Delaware limited partnership.

"***WECC***" means the Western Electricity Coordinating Council, a NERC regional electric reliability council, or any successor organization.

"***Western Interconnection***" means the synchronously operated electric transmission grid located in the western part of North America, including parts of Montana, Nebraska, New Mexico, South Dakota, Texas, Wyoming and Mexico and all of Arizona, California, Colorado, Idaho, Nevada, Oregon, Utah, Washington and the Canadian Provinces of British Columbia and Alberta.

"***WREGIS***" means the Western Renewable Energy Generation Information System or any successor system.

1.2 Rules of Construction

1.2.1 The masculine shall include the feminine and neuter.

1.2.2 References to "Articles," "Sections," "Exhibits" or "Schedules" shall be to articles, sections, exhibits, or schedules of this ESA unless otherwise stated.

1.2.3 The Exhibits and Schedules attached hereto are incorporated in and are intended to be a part of this ESA; *provided,* that in the event of a conflict between the terms of any Exhibit or Schedule and the terms of this ESA, the terms of this ESA shall take precedence.

1.2.4 This ESA was negotiated and prepared by both Parties with the advice and participation of counsel. The Parties have agreed to the wording of this ESA and none of the provisions hereof shall be construed against one Party on the ground that such Party is the author of this ESA or any part hereof.

1.2.5 The Parties shall act reasonably and in accordance with the principles of good faith and fair dealing in the performance of this ESA. Unless expressly provided otherwise in this ESA, (i) where this ESA requires the consent, approval, acceptance, agreement or similar action by a Party, such consent, approval, acceptance, agreement or similar action shall not be unreasonably withheld, conditioned or delayed, and (ii) wherever this ESA gives a Party a right to determine, require, specify or take similar action with respect to a matter, such determination, requirement, specification or similar action shall be reasonable.

1.2.6 Use of the words "include" or "including" or similar words shall be interpreted as "including but not limited to" or "including, without limitation."

1.2.7 Use of the words "tax" or "taxes" shall be interpreted to include taxes, fees, surcharges, and the like.

1.3 Interpretation with Interconnection Agreements

Each Party conducts its operations in a manner intended to comply with FERC Standards of Conduct for Transmission Providers, requiring the separation of its transmission and merchant functions, as applicable.

1.3.1 The Parties acknowledge and agree that the Interconnection Agreements and the Shared Facilities Agreement shall be separate and free-standing contracts and that the terms of this ESA are not binding upon the Transmission Provider.

1.3.2 Notwithstanding any other provision in this ESA, nothing in the Interconnection Agreements or the Shared Facilities Agreement shall alter or modify Seller's or EPE's rights, duties and obligations under this ESA. This ESA shall not be construed to create any rights between Seller and the Transmission Provider.

1.3.3 Seller expressly recognizes that, for purposes of this ESA, the Transmission Provider shall be deemed to be a separate entity and separate contracting party.

1.4 Interpretation of Arrangements for Electric Supply to the Energy Storage Facility

This ESA does not provide for the supply of retail electric power to the Energy Storage Facility, for any purpose ("***House Energy***"). Seller, in its sole discretion, may (a) contract with the local utility in whose retail service territory the Energy Storage Facility is located ("***Local Provider***") for the supply of House Energy, (b) consume energy concurrently generated by the Generating Facility for House Energy, and/or (c) co-locate additional facilities designed to supply House Energy; *provided*, *however*, that excess energy produced from such co-located additional facility shall not be delivered by Seller to EPE under this ESA.

1.4.1 Seller's arrangements for the supply of House Energy to the Energy Storage Facility shall be separate and free-standing arrangements. The terms of this ESA are not binding upon the Local Provider. For purposes of this ESA, the Local Provider shall be deemed to be a separate entity and separate contracting party, whether or not the Local Provider is EPE, an Affiliate of EPE, or a third party entity.

1.4.2 Notwithstanding any other provision in this ESA, nothing in Seller's arrangements for the supply of House Energy to the Energy Storage Facility shall alter or modify Seller's or EPE's rights, duties and obligations under this ESA. This ESA shall not be construed to create any rights between Seller and EPE in EPE's capacity as the Local Provider.

1.4.3 House Energy shall be real time measured by either (i) separate Electric Metering Devices for Metered Output (as defined in the PPA) and House Energy or (ii) a single Electric Metering Device that separately measures Metered Output (as defined in the PPA) and House Energy.

ARTICLE 2 TERM

This ESA shall become effective on the Execution Date, subject to conditions precedent set forth herein, and shall end at 11:59 p.m. MPT on the date that is the last Day of the twentieth (20th) Commercial Operation Year, subject to the early termination provisions set forth herein (collectively, the "***Term***"). Applicable provisions of this ESA shall continue in effect after termination, including early termination, to the extent necessary to enforce or complete the duties, obligations or responsibilities of the Parties arising prior to termination.

ARTICLE 3 ENERGY STORAGE FACILITY DESCRIPTION

3.1 Commercial Terms

The following commercial terms apply to the transaction contemplated by this ESA, each term is as more fully set forth in this ESA:

COMMERCIAL TERMS

Point of Delivery:	The point on Transmission Provider's Transmission System where Seller makes available to EPE the Product being provided by Seller to EPE under this ESA, as further described in Exhibit B.
ESS Capacity Payment Rate:	$12.95 per kW per month, as may be adjusted pursuant to Section 8.1(b).
Day(s) of Week:	Monday through Sunday, including NERC holidays.
Hours:	Hour Ending 0100 - Hour Ending 2400, Monday through Sunday MPT.
Expected Commercial Operation Date:	September 30, 2026, subject to extensions as set forth in Section 3.6.
Outside Commercial Operation Date:	One hundred eighty (180) Days after the Expected Commercial Operation Date.

3.2 Energy Storage Facility

Exhibit A provides a detailed description of the Energy Storage Facility, including identification of the major equipment and components that will make up the Energy Storage Facility. Seller shall provide advance written notice to EPE at the earliest practicable time of any proposed material changes in the Energy Storage Facility.

3.3 Location

A scaled map that identifies the Site, the location of the Electric Interconnection Point, the location of the Point of Delivery, and the location of the Interconnection Facilities is included in Exhibit A. Exhibit A also contains a preliminary indication of the location of the ESS at the Site. Seller will provide notice to EPE of the final proposed location of the ESS at the Site no later than thirty (30) Days prior to initial Site construction mobilization and commencement of civil infrastructure work by Seller's contractors at the Site. On or before the Commercial Operation Date, Seller may provide to EPE a revised Exhibit A removing unused and unnecessary portions of land that were previously included within the Site, if any. Seller shall provide advance written notice to EPE at the earliest practicable time of any other proposed location changes.

3.4 General Design of the Energy Storage Facility

Seller shall construct the Energy Storage Facility in accordance with Prudent Utility Practices and in accordance with the terms and conditions of the Interconnection Agreements and the Shared Facilities Agreement. Seller shall maintain the Energy Storage Facility according to Prudent Utility Practice(s), the Interconnection Agreements, and the Shared Facilities Agreement. The Energy Storage Facility shall at all times:

(a) Have the required panel space and 125V $_{DC}$ battery-supplied voltage to accommodate metering, system telemetering equipment, and communications equipment;

(b) be equipped for and capable of AGC by EPE;

(c) use communication circuits from the Energy Storage Facility to EPE's System Control Center for the purpose of telemetering, supervisory control/data acquisition, and voice and other communications as required for AGC by EPE;

(d) supply Discharge Energy with minimal harmonic distortion in compliance with the requirements of the Interconnection Agreements, Shared Facilities Agreement, and Prudent Utility Practices;

(e) be capable of receiving Charging Energy from the Generating Facility at the Solar Charging Point (or, upon and Seller's receipt of a Grid Charging Interconnection Agreement, Charging Energy from EPE at the Point of Delivery) and delivering Discharge Energy to the Point of Delivery, each at the frequency specified by EPE;

(f) be capable of being remotely started and stopped in response to a signal from the System Control Center;

(g) be capable of immediate disconnection from EPE's system in the event of an Emergency Condition;

(h) meet voltage and reactive/active power control performance for a Category B system as defined in IEEE 1547-2018 for a Distributed Energy Resource (DER) at the Point of Delivery;

(i) meet the normal and abnormal performance category as defined in IEEE 1547-2018 for a Distributed Energy Resource (DER) at the Point of Delivery which shall be Category II minimum; and

(j) meet or exceed the recommended performance specifications defined in Appendix A of the September 2018 NERC Reliability Guideline for BPS-Connected Inverter-Based Resource Performance at the Point of Delivery.

3.5 Expected Commercial Operation Date

Subject to the extensions as specifically set forth herein, the Commercial Operation Date shall occur no later than the Expected Commercial Operation Date.

3.6 Extension

3.6.1 The Expected Commercial Operation Date and related delay damages provisions under Section 3.7 shall be extended by a number of Days, on a day-for-day basis up to:

(a) a maximum of one hundred eighty (180) Days, equal to the duration of any Force Majeure Event; and, in addition to the extensions provided for in this clause (a),

(b) a maximum of one hundred eighty (180) Days, in the event of delay associated with the interconnection of the Energy Storage Facility ("***Interconnection Delay***") (the aggregate of clause (a) above and this clause (b) being no more than three hundred sixty (360) days).

3.6.2 In no event shall the following delays be considered to be an Interconnection Delay pursuant to this ESA: any delays caused by Seller's exercise of Seller's rights pursuant to the Interconnection Agreements or the Shared Facilities Agreement, including (x) to suspend work under an Interconnection Agreement; or (y) to extend the Commercial Operation Date under the Interconnection Agreements beyond September 30, 2026 (except to the extent that such suspension or extension by Seller under an Interconnection Agreement is due to or arises as a result of a (i) Force Majeure Event or (ii) breach of an Interconnection Agreement or the Shared Facilities Agreement by the Transmission Provider).

3.6.3 Seller will provide written notice to EPE describing any such Force Majeure Event or Interconnection Delay within five (5) Business Days after becoming aware of such Force Majeure Event or Interconnection Delay. The number of Days of any such extension shall be calculated from the date on which the Force Majeure Event or Interconnection Delay begins and may be counted concurrently if the Force Majeure Event and the Interconnection Delay occur concurrently. If a Force Majeure Event or Interconnection Delay are claimed to delay the Commercial Operation Date for more than three hundred sixty (360) Days in the aggregate following the Expected Commercial Operation Date, then EPE shall have the right to terminate this ESA without further liability of either Party, and EPE shall return the Development Security less any amounts due from Seller to EPE.

3.7 Delay Damages

If the Commercial Operation Date has not occurred by the Expected Commercial Operation Date, except as a result of a Force Majeure Event or Interconnection Delay, Seller will use commercially reasonable efforts to continue construction of the Energy Storage Facility and shall pay liquidated damages to EPE in an amount equal to the product of (a) the Damage Rate multiplied by (b) each MW of Delayed ESS Capacity ("***Delay Damages***") for each Day after the

Expected Commercial Operation Date until the earlier of (i) the Commercial Operation Date, (ii) the Outside Commercial Operation Date, and (iii) the date this ESA is terminated in accordance with its terms. In no event shall the aggregate Delay Damages paid pursuant to this Section 3.7 and Exhibit M exceed the amount of the Development Security. In the event that the Energy Storage Facility fails to achieve Commercial Operation by the Outside Commercial Operation Date, except as a result of a Force Majeure Event or Interconnection Delay, EPE may, at its sole option, terminate this ESA upon written notice to Seller pursuant to Section 13.1.1(f), in which case Seller's liability will be as set forth in Article 13.

3.8 Guaranteed ESS Capacity Shortfall Damages

If the Commercial Operation Date is declared before the full Guaranteed ESS Capacity of the Energy Storage Facility has been constructed, commissioned, and tested, Seller shall use commercially reasonable efforts to cause the remaining portion of the Guaranteed ESS Capacity to achieve Commercial Operation. If Seller has not caused all Delayed ESS Capacity to achieve Commercial Operation on or before the date that is one hundred eighty (180) Days after the Commercial Operation Date, then no later than two hundred (200) Days after the Commercial Operation Date, Seller shall pay to EPE liquidated damages in the amount of Five Hundred Thousand Dollars ($500,000) per MW of Delayed ESS Capacity (as of the Outside Commercial Operation Date) ("***Guaranteed ESS Capacity Shortfall Damages***"), in which case the Guaranteed PMAX will be reduced in an amount equal to the Delayed ESS Capacity for which Guaranteed ESS Capacity Shortfall Damages were timely paid pursuant to this Section 3.8.

3.9 Test Period

During the Test Period, Seller shall have the right to deliver Energy generated by the Generating Facility, such Energy purchased by EPE pursuant to the terms of the PPA to the Solar Charging Point as Charging Energy as reasonably required for purposes of testing and commissioning the Energy Storage Facility. Seller may also, upon and following Seller's receipt of a Grid Charging Interconnection Agreement, and subject to mutual agreement by Seller and EPE, use Energy sourced from the grid at the Point of Delivery for purposes of testing and commissioning the Energy Storage Facility. Seller shall subsequently redeliver Charging Energy to EPE at the Point of Delivery as Discharge Energy. Title and risk of loss to such Charging Energy and Discharge Energy shall be determined in accordance with Section 7.2. Seller shall notify EPE, to the extent practicable, fifteen (15) Days prior to commencement of such Test Period.

3.10 Notice of Commercial Operation

Not less than thirty (30) Days prior to the date upon which Seller expects to achieve the Commercial Operation Date, Seller shall give written notice to EPE of such expected Commercial Operation Date. EPE shall provide written notice to Seller either accepting or rejecting Seller's notice of such expected Commercial Operation Date and, if EPE rejects such notice, EPE shall specify in such notice what defects to the achievement of the Commercial Operation Date exist to

support its rejection of such notice. Following any such rejection by EPE, Seller shall promptly correct any such defects and shall either redeliver such notice to EPE or initiate dispute resolution in accordance with Section 9.5 in response to EPE's rejection. If dispute resolution is initiated pursuant to this Section 3.10, the Commercial Operation Date shall be determined in accordance with such dispute resolution process. If EPE accepts that Seller has fulfilled the requirements of Commercial Operation, the Commercial Operation Date shall be deemed to have occurred as of the date set forth in Seller's most recent notice delivered pursuant to this Section 3.10. In the event that Seller determines that the Expected Commercial Operation Date for the Energy Storage Facility is not feasible or is impossible to achieve, Seller shall promptly notify EPE and shall advise EPE of the new proposed Commercial Operation Date; *provided*, *however*, *that* such new Commercial Operation Date shall not be later than the Outside Commercial Operation Date.

3.11 Grid Charging

As of the Execution Date, the ESS is configured to charge exclusively using Energy produced by the Generating Facility. Seller shall use commercially reasonable efforts to obtain from the Transmission Provider an amendment to the Interconnection Agreements or a new interconnection agreement that allows the ESS to accept Charging Energy from the electrical grid (a "***Grid Charging Interconnection Agreement***"). If Seller receives a Grid Charging Interconnection Agreement from the Transmission Provider, then as of the Commercial Operation Date the ESS shall be configured to accept Charging Energy from the electrical grid in addition to the Generating Facility, subject to any additional Operating Limitations Seller delivers to EPE in connection with such revised configuration.

3.12 ESS Unit Capabilities

"***ESS Unit Capabilities***" means all of the following for the ESS:

Guaranteed PMAX:	Guaranteed PMAX of One Hundred Fifty (150) MW / Six Hundred (600) MWh of charging and discharging capability as measured at the Point of Delivery, and as may be adjusted pursuant to Section 3.8.
Guaranteed ESS Capacity:	Guaranteed ESS Capacity at the Guaranteed PMAX for four (4) consecutive hours with an expected annual degradation of six and one half tenths percent (0.65%) per Commercial Operation Year, as described further in Exhibit H.
Guaranteed ESS Roundtrip Efficiency:	Guaranteed ESS Roundtrip Efficiency of eighty five percent (85%) at the Commercial Operation Date with an annual degradation of

	three tenths percent (0.3%) per Commercial Operation Year.
Guaranteed Discharge Ramp Rate:	Guaranteed Discharge Ramp Rate of Guaranteed PMAX in MW per second measured between eighty percent (80%) state of charge and twenty percent (20%) state of charge representing the maximum rate that the ESS can change its output power.
Guaranteed Charge Ramp Rate:	Guaranteed Charge Ramp Rate of Guaranteed PMAX in MW per second measured between twenty percent (20%) state of charge to eighty percent (80%) state of charge representing the maximum rate that the ESS can change its input power.

3.13 Early Termination

If Seller determines that the Energy Storage Facility is reasonably unlikely to achieve Commercial Operation on or before the Outside Commercial Operation Date, Seller may, at its sole discretion, terminate this ESA upon written notice to EPE. Except as otherwise provided in the last sentence of this Section 3.13, as EPE's sole and exclusive remedy and Seller's sole and exclusive liability, for any such termination, EPE shall be entitled to retain the Development Security minus any amounts of Delay Damages already paid. EPE shall, within ten (10) Business Days following any such termination, return to Seller any such excess Development Security; *provided, however,* that upon any such termination pursuant to this Section 3.13, EPE shall have the right to exercise the Option pursuant to Section 12.1.

ARTICLE 4 AGC

Prior to the Commercial Operation Date or, if applicable, prior to the Test Period, Seller, at its sole cost and expense, shall install AGC at the Energy Storage Facility and shall maintain such AGC throughout the Delivery Term. Seller shall ensure that, throughout the Delivery Term, the SCADA signal is capable of functioning within the margin of error specified in the control system manufacturer's energy set point margin of error. Seller shall ensure that the Energy Storage Facility's AGC Remote/Local status is in "Remote" set-point control during normal operations.

ARTICLE 5 DELIVERY AND METERING

5.1 Delivery Arrangements

5.1.1 Discharge Energy. Seller shall be responsible for the costs of interconnection and costs required to deliver the Discharge Energy from the Energy Storage Facility to the Point of Delivery. Except as otherwise provided in this Section 5.1, Seller shall not be responsible for costs and charges related to scheduling and imbalances.

5.1.2 Charging Energy. Seller shall take all actions required in accordance with the terms and conditions of this ESA to accept the Charging Energy at and from the Solar Charging Point (or, upon and following Seller's receipt of a Grid Charging Interconnection Agreement, at and from the Point of Delivery) as part of providing the Energy Storage Services, including maintenance, repair, or replacement of equipment in Seller's possession or control used to deliver the Charging Energy to the Energy Storage Facility. Seller shall only use the Charging Energy for EPE's benefit in accordance with the terms and conditions of this ESA, and Seller shall secure transmission necessary to receive Charging Energy from the Generating Facility at the Solar Charging Point (and, upon and following Seller's receipt of a Grid Charging Interconnection Agreement, from the grid at the Point of Delivery) to the ESS. EPE acknowledges and agrees that the maximum aggregate interconnection capacity of the Interconnection Agreements is to be jointly used by the Energy Storage Facility and the Generating Facility; *provided*, that delivery of Energy from the Generating Facility to the Transmission Provider's Transmission System shall take priority over Discharge Energy.

5.1.3 Seller Costs and Charges. As between EPE and Seller under this ESA, Seller shall be responsible for the costs of interconnection and costs required to receive Charging Energy from the Generating Facility at the Solar Charging Point and to deliver Discharge Energy to the Point of Delivery at the required voltage, including the costs of any associated network upgrades. As between EPE and Seller under this ESA, Seller shall also be responsible for all transmission charges, Ancillary Service charges, electrical losses and any other transfer-related charges applicable (i) to Discharge Energy up to the Point of Delivery and (ii) to Charging Energy after the Solar Charging Point (or, upon and following Seller's receipt of a Grid Charging Interconnection Agreement, after the Point of Delivery).

5.1.4 EPE Costs and Charges. EPE shall be responsible for all transmission charges, Ancillary Service charges, electrical losses, market, independent system operator or regional transmission organization costs, charges or penalties, including any imbalance penalties, and any other transfer-related charges and arrangements, including scheduling arrangements, required to deliver Discharge Energy from and beyond the Point of Delivery. Following Seller's receipt of a Grid Charging Interconnection Agreement, EPE shall be responsible for all transmission charges, Ancillary Service charges, electrical losses, and any other transfer-related charges for delivery at the Point of Delivery of Charging Energy.

5.1.5 EPE Transmission and Scheduling Obligations. EPE shall secure all necessary transmission service arrangements, including scheduling arrangements, if any, (i) to take Discharge Energy at the Point of Delivery and deliver it to points beyond, and (ii) following Seller's receipt of a Grid Charging Interconnection Agreement, deliver Charging Energy from the grid at the Point of Delivery.

5.2 Availability Reporting

Seller shall be responsible for providing accurate and timely updates on the current availability of the Energy Storage Facility to EPE's SCC.

5.3 Electric Metering Devices

5.3.1 Seller shall ensure that Charging Energy and Discharge Energy delivered pursuant to this ESA shall be metered and accounted for separately from any electric generation facility (other than the Generating Facility) that utilizes the same Electric Interconnection Point. Seller shall install or have installed Electric Metering Devices at or near the Electric Interconnection Point, and EPE may install Back-Up Metering, each in an arrangement consistent with the configuration depicted in Exhibit B, or as otherwise agreed between the Parties.

5.3.2 The provisions of this Section 5.3 shall govern Electric Metering Devices except to the extent the Interconnection Agreements or Shared Facilities Agreement modify or otherwise conflict with these provisions, in which case, the Interconnection Agreements shall govern.

5.3.3 All Electric Metering Devices used to measure Charging Energy and Discharge Energy made available to EPE by Seller under this ESA and to monitor and coordinate operation of the Energy Storage Facility shall be owned, installed, and maintained in accordance with the Interconnection Agreements and Shared Facilities Agreement at no cost to EPE under this ESA. The design of the Electric Metering Device system shall be subject to EPE approval prior to commencement of construction of the Energy Storage Facility. Electric Metering Devices shall be bi-directional and shall be capable of measuring and reading instantaneous and hourly real and reactive Energy and capacity, if supplied by either the Generating Facility or the ESS. If Electric Metering Devices are not installed at the Point of Delivery, meters or meter readings will be adjusted to reflect losses from the Electric Metering Devices to the Point of Delivery based initially on the amount specified by the manufacturer for expected losses; *provided*, that the Parties may revise this loss adjustment based on actual experience. Seller shall provide or arrange with the Transmission Provider to provide EPE reasonable access to all Electric Metering Devices for all purposes necessary to perform under this ESA and shall provide EPE the reasonable opportunity to be present at any time when such Electric Metering Devices are to be inspected and tested or adjusted. EPE shall also have the right to conduct, at its own cost and expense, its own tests of the Electric Metering Devices upon request within a reasonable timeframe. Seller shall provide EPE with all authorizations necessary to have access to the Electric Metering Devices, including obtaining any consent or other agreement from the Transmission Provider necessary to allow EPE

such access. Energy shall be metered using solid state, high precision, digital display meters of ANSI 0.1 accuracy class or better, with the specific model approved by EPE in its reasonable discretion.

5.3.4 EPE may elect to install and maintain, at its own expense, backup metering devices ("***Back-Up Metering***") in addition to the Electric Metering Devices, which installation and maintenance shall be performed in a manner acceptable to the Parties. EPE, at its own expense, shall inspect and test Back-Up Metering upon installation and at least annually thereafter. EPE shall provide Seller with reasonable advance notice of, and permit a representative of Seller to witness and verify, such inspections and tests; *provided*, *however*, that Seller shall not unreasonably interfere with or disrupt such inspection and testing activities of EPE and shall comply with all applicable safety standards. Upon written request, EPE shall perform additional inspections or tests of Back-Up Metering and shall permit a qualified representative of Seller to inspect or witness the testing of Back-Up Metering; *provided*, *however*, that Seller shall not unreasonably interfere with or disrupt such inspection and testing activities of EPE and shall comply with all applicable safety standards. The actual expense of any such requested additional inspection or testing shall be borne by Seller, unless, upon such inspection or testing, Back-Up Metering is found to register inaccurately by more than the allowable limits established in this Article 5, in which event the expense of the requested additional inspection or testing shall be borne by EPE. If requested in writing, EPE shall provide copies of any inspection or testing reports to Seller.

5.3.5 If any Electric Metering Devices, or Back-Up Metering, are found to be defective or inaccurate outside the bounds of the selected device's manufacturer's performance standards, they shall be adjusted, repaired, replaced, and/or recalibrated as near as practicable to a condition of one half percent (0.5%) error by the Party owning such defective or inaccurate device and at that Party's expense.

5.4 Adjustment for Inaccurate Meters

If an Electric Metering Device, or Back-Up Metering, fails to register, or if the measurement made by an Electric Metering Device, or Back-Up Metering, is found upon testing to be inaccurate by more than one half percent (0.5%), an adjustment shall be made correcting all measurements by the inaccurate or defective Electric Metering Device, or Back-Up Metering, for both the amount of the inaccuracy and the period of the inaccuracy, in the following manner:

(a) In the event that the Electric Metering Device is found to be defective or inaccurate, the Parties shall use Back-Up Metering, if installed, to determine the amount of such inaccuracy; *provided*, *however*, that Back-Up Metering has been tested and maintained in accordance with the provisions of this Article 5. If Back-Up Metering is installed on the low side of Seller's step-up transformer, the Back-Up Metering data shall be adjusted for losses in the same manner as for the Electric Metering Devices. In the event that Back-Up Metering is not installed, or Back-Up Metering is also found to be inaccurate

by more than one half percent (0.5%), the Parties shall estimate the amount of the necessary adjustment on the basis of deliveries of Charging Energy to the Energy Storage Facility at the Solar Charging Point (or, upon and following Seller's receipt of a Grid Charging Interconnection Agreement, at the Point of Delivery) and Discharge Energy from the Energy Storage Facility to the Point of Delivery, in each case during periods of similar operating conditions when the Electric Metering Device was registering accurately. The adjustment shall be made for the period during which inaccurate measurements were made.

(b) In the event that the Parties cannot agree on the actual period during which the inaccurate measurements were made, the period during which the measurements are to be adjusted shall be the shorter of (i) the last one-half of the period from the last previous test of the Electric Metering Device to the test that found the Electric Metering Device to be defective or inaccurate, or (ii) the one hundred eighty (180) Days immediately preceding the test that found the Electric Metering Device to be defective or inaccurate.

(c) To the extent that the adjustment period covers a period of deliveries for which payment has already been made by EPE, EPE shall use the corrected measurements as determined in accordance with this Article 5 to recompute the amount due for the period of the inaccuracy and shall subtract the previous payments by EPE for this period from such re-computed amount. If the difference is a positive number, the difference shall be paid by EPE to Seller; if the difference is a negative number, that difference shall be paid by Seller to EPE, or at the discretion of EPE, may take the form of an offset to payments due Seller by EPE. Payment of such difference by the owing Party shall be made not later than thirty (30) Days after the owing Party receives notice of the amount due.

ARTICLE 6 CONDITIONS PRECEDENT

6.1 Conditions Precedent

The obligations of the Parties under this ESA are subject to satisfaction of the following conditions precedent; *provided*, that the obligations of the Parties under Article 2, Article 3 (except Sections 3.5 through 3.10), Article 13, Article 14, Article 15, Article 16, Article 17, Article 18, Article 19, Section 22.2, Article 24, and Article 25 (except Section 25.17) shall be effective commencing on the Execution Date:

(a) Receipt of approval of this ESA from the Boards of Directors of EPE and its parent company, unless otherwise agreed to by both Parties.

ARTICLE 7 SALE AND PURCHASE OF PRODUCT

7.1 Sale and Purchase of Product

In accordance with and subject to the terms and conditions of this ESA, commencing on the first Day of the Test Period and continuing through the end of the Term ("***Delivery Term***"),

Seller shall sell and deliver to EPE, and EPE shall purchase and receive from Seller, all right, title and interest in and to the Product made available by Seller at the Point of Delivery in accordance with Article 5; *provided*, *however*, that EPE shall not be required to receive and Seller shall not be required to make available, Product when and to the extent that (a) a Seller Forced Outage is preventing Seller's performance, (b) Seller's performance is excused during Seller Excused Hours, (c) a Scheduled Maintenance Outage is preventing Seller's performance, or (d) Seller's performance is excused by a Force Majeure Event. At its sole discretion, EPE may resell or use for another purpose all or a portion of the Product. EPE will have exclusive rights to offer, bid, or otherwise submit the Product for resale in the market and retain and receive any and all related revenues. In no event shall Seller have the right to procure any element of the Product from sources other than the Energy Storage Facility for sale or delivery to EPE under this ESA.

7.2 Title and Risk of Loss

7.2.1 Charging Energy. As between Seller and EPE, Seller shall be deemed to be in control of all Charging Energy supplied by the Generating Facility at the Solar Charging Point until such Charging Energy is discharged and delivered (less AC losses and ESS Roundtrip Efficiency losses) to EPE as Discharge Energy at the Point of Delivery. Upon and following Seller's receipt of a Grid Charging Interconnection Agreement, EPE shall be deemed to be in control of all Charging Energy supplied by EPE up to delivery at the Point of Delivery, and Seller shall be deemed to be in control of such Charging Energy from and after such delivery until such Charging Energy is discharged and delivered (less AC losses and ESS Roundtrip Efficiency losses) to EPE as Discharge Energy at the Point of Delivery. EPE shall retain title to Charging Energy and Energy stored in the ESS at all times.

7.2.2 Discharge Energy. As between Seller and EPE, Seller shall be deemed to be in control of all Discharge Energy up to delivery at the Point of Delivery, and EPE shall be deemed to be in control of such Discharge Energy (less AC losses and ESS Roundtrip Efficiency losses) from and after such delivery at the Point of Delivery. EPE shall retain title to Discharge Energy at all times.

7.2.3 RECs and Environmental Attributes. Title and risk of loss related to Environmental Attributes shall transfer from Seller to EPE at the Point of Delivery.

7.3 Future Environmental Attributes

The Parties acknowledge and agree that (a) additional Environmental Attributes may be recognized by a Governmental Authority after the Execution Date; (b) in accordance with the terms of this ESA all right and title to such additional Environmental Attributes is included in the ESS Capacity Payment Rate and (c) such additional Environmental Attributes shall pass to EPE in accordance with Section 7.2. If in order for EPE to receive the benefit of any additional Environmental Attributes Seller must incur any third party costs not otherwise provided for in this ESA, such costs shall, if Seller incurs such costs at EPE's request, be reimbursed promptly to

Seller by EPE in accordance with this Section 7.3. Seller shall deliver a good faith estimate of such additional costs to EPE prior to incurring such costs, and following receipt of such estimate, EPE shall notify Seller of (i) its continued election to have Seller incur such costs, and in such case EPE shall promptly reimburse Seller for such costs, or (ii) of its election to have Seller cease incurring the additional costs, in which case EPE acknowledges that it may not receive the benefits of such additional Environmental Attributes; *provided*, that if the additional costs exceed Seller's good faith estimate by more than ten percent (10%), EPE shall have the right to notify Seller to cease incurring the additional costs, in which case EPE acknowledges that it may not receive the benefits of such additional Environmental Attributes. For the avoidance of doubt, EPE shall remain liable to Seller for all costs incurred prior to Seller's receipt of EPE's notice. The Parties agree to negotiate in good faith further agreements and documentation necessary to effectuate the transfer of such additional Environmental Attributes.

7.4 Scheduling

7.4.1 EPE shall arrange all scheduling services necessary to ensure compliance with NERC/WECC operating policies and criteria, Transmission Provider OATT requirements, including CAISO EIM requirements, and any other applicable guidelines. Prior to the implementation and applicability to the Energy Storage Facility of any energy market, to the extent scheduling is required now or in the future, EPE shall schedule all Discharge Energy and Charging Energy in accordance with NERC/WECC operating polices and criteria, Transmission Provider OATT requirements and any other applicable guidelines by providing Charging Notices and Discharging Notices, except that EPE shall not schedule any (i) Discharge Energy, Charging Energy or Ancillary Services during Seller Forced Outages, Scheduled Maintenance Outages, and Force Majeure Events, or (ii) Discharge Energy that would reduce the quantity of Energy that the Generating Facility would otherwise be capable of delivering. Each Charging Notice will be effective unless and until EPE modifies such Charging Notice by providing Seller with an updated Charging Notice, and each Discharging Notice will be effective unless and until EPE modifies such Discharging Notice by providing Seller with an updated Discharging Notice.

7.4.2 If at any point during the Delivery Term, (i) an alternative market design is implemented in which the Energy Storage Facility will or can participate in an energy market, or (ii) either the Energy Storage Facility, the Electric Interconnection Point or EPE no longer reside in the same market (clauses (i) and (ii), a "***Market Event***"), and such Market Event materially changes the interconnection and delivery requirements in this ESA, the Parties shall cooperate in good faith to facilitate the delivery of Product from the Energy Storage Facility to the Point of Delivery consistent with this ESA to the extent possible; *provided*, that Seller's liabilities shall not increase, and any costs, charges, or fees incurred by Seller or associated with any changes agreed by the Parties to this ESA or the Parties' obligations under this ESA as a result of this Section 7.4.2 shall be borne by EPE in their entirety and there shall be no changes to the ESS Capacity Payment Rate or the ESS Capacity Payment in connection with this Section 7.4.2.

7.5 Forced Outages

7.5.1 EPE and Seller shall promptly advise one another of events that may form the basis for a declaration of the existence or termination of Seller Excused Hours or a Seller Forced Outage. EPE or Seller (as appropriate) shall at the earliest practicable date provide the other Party written notice ("***Outage Notice***") of the declaration of the existence of Seller Excused Hours or a Seller Forced Outage. Seller shall provide such notice to EPE's System Control Center. An Outage Notice provided by either Party shall contain information regarding the beginning date and time of the event, the expected end date and time of such event, and the expected Product, if any, that would be available for delivery at the Point of Delivery during such event. EPE or Seller (as appropriate) shall keep the other Party informed of any developments that will affect either the duration of such event or the availability of the Energy Storage Facility during or after the end of such event. In addition, Seller shall comply with all then-current EPE, NERC and WECC generating unit outage reporting requirements, as they may be revised from time-to-time.

7.5.2 Within five (5) Business Days after the end of each Month during the Delivery Term, Seller shall prepare, maintain and deliver to EPE a schedule that identifies all Scheduled Maintenance Outages, deratings and Seller Forced Outages that occurred during such Month. The data reported must meet all requirements specified in the NERC Generating Availability Data System (GADS) manual. In the event of any disagreement between EPE and Seller concerning the schedule prepared by Seller, the Parties shall promptly confer to resolve the disagreement.

ARTICLE 8 PAYMENT CALCULATIONS

8.1 Billing Components

The total due from EPE to Seller for each Monthly Billing Period during the Term shall be paid in accordance with the invoicing procedures set forth in Section 9.1. Charges will consist of the following, and will begin on the first Day of the Test Period:

(a) ESS Capacity Payment. Subject to the other provisions of this ESA, including Section 8.1(b), EPE shall pay Seller for all Product made available by Seller at the Point of Delivery in an amount equal to the product of (i) the Installed ESS Capacity, not to exceed the Guaranteed PMAX, multiplied by (ii) the ESS Capacity Payment Rate (the "***ESS Capacity Payment***"). For the avoidance of doubt, the ESS Capacity Payment also compensates Seller for the associated Environmental Attributes and Ancillary Services delivered to EPE. The ESS Capacity Payment does not include any amounts for which EPE is responsible under Section 9.7.

(b) Lithium Carbonate Adjustment.

(1) No later than fifteen (15) Business Days prior to the FNTP Date, Seller shall determine the trailing ninety (90)-Day average spot price of lithium

carbonate on the Shanghai Metals Market (99.5% battery grade; 13% VAT included; delivered to factory) in Chinese renminbi per metric ton (RMB/mt) ("***Lithium Price***") available at https://www.metal.com/Lithium/201102250059 or such other applicable Shanghai Metals Market website. To the extent not publicly available without a fee or subscription, Seller shall provide EPE reasonable supporting documentation demonstrating the Lithium Price.

(2) If the Lithium Price is between 0 and 375,000 RMB/mt, Seller shall calculate and give prompt written notice to EPE setting forth an adjustment to the ESS Capacity Payment Rate as determined using the Lithium Carbonate Contract Price Adjustment Calculation and the ESS Capacity Payment Rate shall be so adjusted for the remainder of the Term.

(3) If the Lithium Price is equal to or exceeds 375,000 RMB/mt, EPE shall have the right to do any of the following (i) accept an ESS Capacity Payment Rate adjustment as determined by Seller using the Lithium Carbonate Contract Price Adjustment Calculation and the ESS Capacity Payment Rate shall be so adjusted for the remainder of the Term, or (ii) request that Seller enter into good faith negotiations to adjust the ESS Capacity Payment Rate with the objective of enabling EPE to continue receiving Product as otherwise contemplated by this ESA; *provided,* that (a) upon any such request, Seller and EPE shall enter into such negotiations in good faith, and (b) any modifications to this ESA shall require mutual agreement of both Parties (not to be unreasonably withheld). Notwithstanding anything to the contrary, if the Lithium Price is equal to or exceeds 375,000 RMB/mt, Seller shall have the right to terminate this ESA upon written notice to EPE, without further liability of either Party except for any amounts due and owing under this ESA as of the date of such termination for Product delivered prior to such termination, if any, following which EPE shall promptly return the Development Security to Seller less any amounts drawn in accordance with this ESA.

(c) NMPTCs. The Parties acknowledge and agree that, as of the Execution Date, the Energy Storage Facility does not qualify for NMPTCs under the NMPTC Statute. If, at any time during the Term, NMPTCs become available in connection with the Energy Storage Facility, EPE and Seller shall negotiate in good faith and agree upon an arrangement for sharing the benefits associated with the monetization of any such NMPTCs that the Energy Storage Facility may become eligible evenly between EPE and Seller; *provided*, that (i) any decision to monetize any NMPTCs will be in Seller's sole discretion and (ii) any obligations of Seller under or arising out of this Section 8.1(c) shall be subject to the Compliance Cost Cap and the other requirements of Section 22.2.

8.2 Payment Support Requirement

Each Party shall use commercially reasonable efforts to defend, before any Governmental Authority, all terms and conditions of this ESA consistent with Applicable Law.

8.3 Survival on Termination

Subject to Section 6.1, the provisions of this Article 8 shall survive the repudiation, termination, or expiration of this ESA for so long as may be necessary to give effect to any outstanding payment obligations of the Parties due and payable prior to any such repudiation, termination, or expiration.

ARTICLE 9 BILLING AND PAYMENT PROCEDURES

9.1 Statements and Payment of Electricity Payments

9.1.1 Seller shall read or have read on its behalf the Electric Metering Devices at the Point(s) of Delivery at 11:59 p.m. MPT on the last Day of each Month during the Delivery Term, unless otherwise mutually agreed by the Parties.

9.1.2 Payments due shall be determined and adjusted in accordance with Article 8 and Section 10.10. From and after the start of the Delivery Term, EPE shall pay to Seller, monthly in arrears, payments in accordance with the provisions of Section 9.1.3.

9.1.3 On or before the tenth (10th) Day of each Month following the Month in which the Delivery Term commences, Seller shall prepare an invoice showing the amount payable by EPE to Seller pursuant to Article 8 (in Dollars) for the preceding Month. Each such invoice shall show the ESS Capacity Payment, and supporting information and calculations, in reasonable detail.

9.1.4 EPE shall, subject to Section 9.5 and Section 9.9, pay all invoices within thirty (30) Days after the date EPE receives Seller's invoice. If EPE should dispute a portion of the charges set forth on any invoice, it shall nonetheless pay all amounts not in dispute by the applicable due date.

9.1.5 If banks in El Paso, Texas, are permitted to close on any date on which any payment by EPE would otherwise have been due, then EPE shall make such payment on the Business Day that immediately follows such payment date.

9.1.6 All payments specified in this Section 9.1 shall be made to an account designated by Seller in Exhibit D, as such account may be changed by Seller at any time upon written notice to EPE.

9.2 Miscellaneous Payments

Any amounts due to either Seller or EPE under this ESA, other than those specified in Section 9.1, shall be paid within thirty (30) Days following receipt by the other Party of an itemized invoice from the Party to whom such amounts are due setting forth, in reasonable detail, the basis for such payment.

9.3 Currency and Method of Payment

Notwithstanding anything contained in this ESA, all payments to be made by either Seller or EPE under this ESA shall be made in Dollars in immediately available cleared funds by wire transfer into the relevant account specified in Exhibit D or, if no account is specified, into the account designated by the receiving Party.

9.4 Default Interest

Except where payment is the subject of a bona fide dispute (in which case it shall be treated under Section 9.5), or where otherwise waived by the Party entitled to interest, if any payment due from EPE to Seller or from Seller to EPE under this ESA is not paid when due, then, in addition to such unpaid amount, interest shall be due and payable thereon. Applicable interest shall be calculated at a rate equal to the lower of (i) the "prime" rate as published in *The Wall Street Journal* on the first Business Day of each Month plus two percent (2%) and (ii) the maximum interest rate allowed by Applicable Law ("***Default Rate***"), as in effect from time to time and shall continue to accrue from the date on which such payment became overdue to and until the date such payment is made in full (both dates inclusive).

9.5 Disputed Items

9.5.1 Either Party ("***Disputing Party***") may dispute in good faith the accuracy of a reading of the Electric Metering Devices and/or the accuracy of an invoice. Where a reading or bill is the subject of a dispute in good faith, the Disputing Party shall give written notice to the other Party within ten (10) Days after the delivery of the invoice or reading by the other Party, together with details of its reasons for such dispute. The Disputing Party shall make payment of any undisputed amounts to the other Party by the due date for payment specified in such invoice. The Parties shall use all reasonable efforts to resolve the dispute in accordance with Section 14.8. Any amount or adjustment with respect to a meter reading subsequently agreed to by the Parties or determined to be due shall be made (in each case in settlement of a dispute) by a credit or additional charge on the next bill rendered (as the case may be).

9.5.2 All amounts paid as a result of the settlement of a dispute shall be paid with interest thereon at the Default Rate from the Day on which such payment originally fell due to and until the date such payment is made in full (both dates inclusive), unless otherwise waived by the Party entitled to such interest.

9.6 Statement Errors

In the event that either Party becomes aware of any error in any statement, such Party shall, immediately upon discovery of the error, notify in writing the other Party of the error and shall rectify such error (whether such error was in the form of an underpayment or overpayment) within thirty (30) Days of such notification. A Party must notify the other Party of any error within three hundred sixty five (365) Days of such error.

9.7 Taxes

9.7.1 All Discharge Energy delivered by Seller to EPE under this ESA shall be sales by Seller for resale, with EPE reselling such Discharge Energy. EPE shall obtain and provide Seller an appropriate New Mexico Nontaxable Transaction Certificate prior to the date any sales under this ESA occur. Since the Discharge Energy delivered by Seller to EPE under this ESA should qualify as sales by Seller for resale, the Parties further acknowledge their understanding that no gross receipts Tax should be applicable to the sale or delivery of Discharge Energy under this ESA; *provided*, *however*, that in the event any such Tax is or becomes applicable, EPE shall reimburse Seller for such Tax. During the Delivery Term, Seller and EPE each covenant that it will take all actions required to qualify the Discharge Energy delivered to EPE under this ESA, and refrain from taking any actions that would cause the Energy delivered to EPE under this ESA to not qualify, for a New Mexico Type 2 Nontaxable Transaction Certificate.

9.7.2 On all invoices, Seller shall separately show all New Mexico gross receipts, compensating, sales, and other similar taxes charged to EPE; *provided*, that in no event will interest or penalties on such taxes be reimbursable by EPE. If the sale of Product takes place on tribal land, Seller will comply with applicable state and tribal laws governing the reporting and payment of gross receipts taxes on those transactions.

9.7.3 Seller shall be responsible and shall pay when due all income, gross receipts, compensating, use, valued added, employment, ad valorem, personal real property or other similar Taxes, including any associated interest and penalty assessments and any and all franchise fees or similar fees assessed against Seller or the Energy Storage Facility due to the construction, ownership, leasing, operation or maintenance of the Energy Storage Facility, or any components or appurtenances thereof, including all Taxes, fees, allowances, trading credits and other offsets and impositions for wastes and emissions (including carbon-based compounds, oxides of nitrogen and sulfur, mercury and other Hazardous Materials) produced by the Energy Storage Facility. If EPE is assessed any Taxes or associated fees as a result of the improvement of a Site due to the existence of the Energy Storage Facility on the Site, EPE shall immediately notify Seller. EPE and Seller shall cooperate in contesting such assessment. If, after resolution of the matter, Taxes are imposed on EPE as a result of the improvement of the Site due to the existence of the Energy Storage Facility on the Site, Seller shall reimburse EPE for such Taxes. Seller shall not be obligated to pay or reimburse EPE for Taxes imposed on or measured by EPE's overall revenues or income. Seller's prices under Article 8 are inclusive of such Taxes, allowances and credits during the Term.

9.7.4 If a Party is required to remit or pay Taxes that are the other Party's responsibility under this ESA, such Party shall promptly reimburse the other Party for such Taxes. Consistent with Applicable Law, the Parties shall use all reasonable efforts to administer this ESA and implement the provisions in this ESA in a manner that will minimize Taxes due and payable by all Parties.

9.7.5 The Parties shall provide each other, upon written request, with copies of any documentation respecting this ESA or the Energy Storage Facility that may be reasonably necessary in the ordinary course of any inter-governmental, state, local, municipal or other political subdivision tax audit inquiry or investigation.

9.7.6 Consistent with Applicable Law, the Parties shall cooperate to minimize Taxes; however, no Party shall be obligated to incur any extraordinary financial burden to reduce Taxes for which the other Party is responsible under this ESA.

9.8 Setoff and Payment Adjustments

Except as otherwise expressly provided for in this ESA, including Section 9.9, all payments between the Parties under this ESA shall be made free of any restriction or condition and without deduction or withholding on account of any other amount, whether by way of setoff or otherwise.

9.9 Netting

9.9.1 A Party at any time may offset against any and all amounts that may be due and owed to the other Party under this ESA, including damages and other payments that are owed by a Party to the other Party pursuant to this ESA. Undisputed and non-offset portions of amounts invoiced under this ESA shall be paid on or before the due date or shall be subject to the late payment interest charges set forth in Section 9.4.

9.9.2 If Seller and EPE net their obligations to each other under this ESA, then such amounts will be aggregated, and Seller and EPE will discharge their obligations to pay through netting of payments on a current accounting basis. If the amounts owed by EPE or Seller to the other are equal on a current accounting basis, neither shall be required to make payment under this ESA.

9.10 Survival on Termination

Subject to Section 6.1, the provisions of this Article 9 shall survive the repudiation, termination or expiration of this ESA for so long as may be necessary to give effect to any outstanding payment obligations of the Parties that became due and payable prior to any such repudiation, termination or expiration.

ARTICLE 10 OPERATIONS AND MAINTENANCE

10.1 Construction of the Energy Storage Facility

10.1.1 Seller will diligently pursue the development and construction of the Energy Storage Facility using commercially reasonable efforts consistent with Prudent Utility Practices and in compliance with the terms and conditions of the Interconnection Agreements, the Shared Facilities Agreement, and this ESA. Subject to Section 8.1(b), Seller will be solely responsible for, and the ESS Capacity Payment Rate will not be adjusted to accommodate, increased costs (other than as set forth in Section 8.1(b)) or any failure to obtain any Tax Benefits. On and after the Execution Date through the start of construction, Seller will provide EPE monthly development and construction updates.

10.1.2 On and after the start of construction and through the Commercial Operation Date, Seller will provide EPE monthly construction updates. If Seller becomes aware of any critical milestone that will not be achieved by the required date, Seller must provide EPE written notice and a recovery plan to eliminate any delay in the construction schedule. In no event will Seller's failure to complete one or more critical milestones by the established dates change, delay or otherwise affect the requirement to achieve Commercial Operation by the Outside Commercial Operation Date. EPE shall have the right to monitor the construction, commissioning, start-up, testing and operations of the Energy Storage Facility and to be present during the commissioning, start-up and testing of the Energy Storage Facility; *provided*, *however*, that EPE shall comply with all of Seller's applicable safety and health rules and requirements and shall conduct itself in a manner that will not unreasonably interfere with the Energy Storage Facility's operations.

10.1.3 Seller may not modify, alter or otherwise change the Energy Storage Facility without the prior written consent of EPE, except (i) as required by Prudent Utility Practices or Applicable Law; (ii) for modifications, alterations, expansions or other changes that would not be expected to materially and adversely alter the Guaranteed ESS Capacity or availability of the Energy Storage Facility or materially and adversely impact the capabilities of the Energy Storage Facility; or (iii) in connection with maintenance on the Energy Storage Facility, including repairs and replacement of equipment, as determined to be reasonable or necessary by Seller.

10.1.4 Seller shall designate (by a written notice delivered to EPE by the Execution Date) an Energy Storage Facility Manager reasonably acceptable to EPE who shall have full responsibility for overseeing the performance of construction, commissioning, start-up and testing activities conducted at the Energy Storage Facility and who shall act as a single point of contact in all matters on behalf of Seller ("***Energy Storage Facility Manager***"). Seller may designate a new Energy Storage Facility Manager from time to time by a written notice delivered to EPE. Seller's Energy Storage Facility Manager shall be deemed to have full authority to act on behalf of Seller, and, subject to satisfaction of the requirements set forth in Section 14.1, notices given by EPE to the Energy Storage Facility Manager shall be deemed as having been given to Seller.

10.1.5 Other than the rights and obligations of EPE specified in this ESA and any documents ancillary hereto, neither this ESA nor any such ancillary document shall be interpreted to create in favor of EPE, and EPE specifically disclaims, any right, title or interest in any part of the Energy Storage Facility.

10.2 Commissioning Tests

Seller shall give EPE at least sixty (60) Days' prior notice of the approximate test date and of the proposed tests scheduled relating to the commissioning of the Energy Storage Facility ("***Commissioning Tests***") as described in Exhibit F. Representatives of EPE shall have the right to be present at all such testing; *provided*, *however*, that such representatives of EPE shall comply with all of Seller's applicable safety and health rules and requirements and shall conduct themselves in a manner that will not unreasonably interfere with the Commissioning Tests. Seller shall promptly notify EPE of any changes to the test date or the date of any Commissioning Tests in order that EPE may arrange for its respective representatives to attend.

10.3 Access to and Inspection of the Energy Storage Facility

10.3.1 Seller shall provide EPE and its authorized agents, employees and inspectors reasonable access to the Energy Storage Facility, including the control room and Seller's Interconnection Facilities, for the purposes set forth in this ESA. EPE acknowledges that such access does not provide EPE with the right to direct or modify the operation of the Energy Storage Facility in any way and further acknowledges that any exercise by EPE of its rights under this Section 10.3.1 shall be at its own risk and expense; *provided*, *however*, that EPE shall comply with all of Seller's applicable safety and health rules and requirements and shall conduct itself in a manner that will not unreasonably interfere with the Energy Storage Facility's operations.

10.3.2 No inspections of the Energy Storage Facility, whether by EPE or otherwise, and no acceptance or approval given under this ESA, shall relieve Seller of or reduce its obligation to maintain the Energy Storage Facility and operate the same in accordance with this ESA and Prudent Utility Practices. In no event shall any statement, representation, or lack thereof by EPE, either express or implied, relieve Seller of its exclusive responsibility for the Energy Storage Facility. Any inspection of Seller's property or equipment by EPE, or any review by EPE or consent by EPE to Seller's plans, shall not be construed as endorsing the design, fitness or operation of the Energy Storage Facility equipment nor as a warranty or guarantee.

10.4 Operating Parameters

10.4.1 Seller shall operate or procure the operation of the Energy Storage Facility in accordance with Prudent Utility Practices ("***Operating Parameters***"), subject only to the Operating Limitations, Emergency Conditions and Force Majeure Events; *provided,* that during the Delivery Term, Seller shall: (i) have the sole responsibility to, and shall at its sole expense, operate and maintain the Energy Storage Facility in accordance with all requirements set forth in this ESA,

and (ii) comply with reasonable requirements of EPE regarding day-to-day or hour-by-hour communications with EPE subject to the Operating Limitations. Subject to compliance with the Operating Parameters and the Operating Limitations, Seller agrees to operate the Energy Storage Facility in such a manner that Discharge Energy delivered by Seller will meet all requirements set forth in any Discharging Notice for voltage level, harmonics, power factor, VArs, Ancillary Services and other electrical specifications required by the Transmission Provider and will have the capabilities to be dispatched manually by Seller as is necessary to comply with the provisions of this ESA.

10.4.2 Seller shall operate the Energy Storage Facility such that all system protective equipment is in service whenever the Energy Storage Facility is connected to, or is operated in parallel with, the Transmission Provider's Transmission System, except for normal testing and repair. Seller shall provide adequate system protection and control devices to ensure safe and protected operation of all energized equipment during normal testing and repair. The Energy Storage Facility's protective equipment shall meet the Institute of Electrical and Electronic Engineers standards and Prudent Utility Practices. Seller shall have qualified independent, third-party personnel test, calibrate and certify in writing the proper functioning of all protective equipment at least once every twelve (12) Months during the Delivery Term. Seller shall perform a unit functional trip test after each overhaul of the Energy Storage Facility's major equipment and shall provide results to EPE in writing prior to returning the equipment to service. All of the foregoing shall be conducted in accordance with Prudent Utility Practices.

10.5 Operating Procedures

10.5.1 Not later than thirty (30) Days before the Commercial Operation Date, an operating committee consisting of Seller and EPE representatives shall develop mutually agreeable written Operating Procedures for integration of the Energy Storage Facility into EPE's system. Operating Procedures shall include, but not be limited to, methods of day-to-day communications, including Charging Notices and Discharging Notices; metering, telemetering, telecommunications, and data acquisition procedures; key personnel lists for Seller and EPE, including an appointed authorized representative for each Party; clearances and switching practices; operations and maintenance scheduling and reporting; scheduling and forecasting practices; daily capacity, daily Charging Energy, and daily Discharge Energy reports; unit operations log; Seller Forced Outage and planned outage reporting, and such other matters as may be mutually agreed upon by the Parties. Seller must staff, operate, maintain and control the Energy Storage Facility at all times consistent with the Operating Procedures, this ESA, Prudent Utility Practice, Applicable Laws and required permits. The Operating Procedures also will require Seller to take all measures necessary to remediate or otherwise correct any breach of environmental protection regulations as required under Applicable Law. Personnel of Seller capable of starting, running, and stopping the Energy Storage Facility must be available, either at the Energy Storage Facility or capable of being at the Energy Storage Facility on twelve (12) hours' notice. Seller will make qualified personnel available twenty-four (24) hours per Day, seven (7) Days per week to

perform scheduling and receive and give communications relating to the operation and dispatch of the Energy Storage Facility. EPE will use commercially reasonable efforts to notify Seller twenty-four (24) hours in advance of potentially critical start-ups.

10.5.2 The Parties shall cooperate in good faith to determine mutually acceptable annual testing procedures for the Energy Storage Facility in accordance with Exhibit F.

10.6 Energy Storage Facility Maintenance

10.6.1 Seller shall maintain all Energy Storage Facility equipment or cause the same to be maintained at all times in accordance with Prudent Utility Practices and otherwise in accordance with this ESA. At least sixty (60) Days before the Commercial Operation Date, Seller will provide EPE a notice of Scheduled Maintenance Outages for the Energy Storage Facility for the first Commercial Operation Year within the Term. Thereafter, no later than September 1 of each Commercial Operation Year, Seller shall provide EPE with a non-binding notice of the annual Scheduled Maintenance Outages for the following Commercial Operation Year and a notice of estimated long-term Scheduled Maintenance Outages for the next four (4) Commercial Operation Years. Each notice of Scheduled Maintenance Outages must identify each planned interruption and/or reduction of the Energy Storage Facility's capacity, including the duration of such event. Each annual Scheduled Maintenance Outage for the Commercial Operation Year will be subject to approval by EPE, not to be unreasonably withheld. EPE may, within fifteen (15) Days after receipt of the schedule, request reasonable modifications to the schedule. Seller may not schedule any interruption or reduction to Product for any reason at any time during May 1 through September 1, December, or January without the prior written approval of EPE, which approval may be withheld or granted in EPE's sole discretion. EPE may request Seller to defer or reschedule any Scheduled Maintenance Outage up to forty-eight (48) hours before commencement of the outage. Seller must give EPE no less than ninety (90) Days' advance notice of any proposed change in the annual maintenance schedule. Such requested changes in the schedule shall not materially adversely impact EPE, and Seller agrees to compensate EPE for any costs incurred by EPE as a result of such change. Notwithstanding any provision in this ESA to the contrary, prior notice to, and approval from, EPE shall not be required if any such maintenance is required for safety, in response to Emergency Conditions, or compliance with Applicable Laws, and such maintenance cannot be delayed until the next Scheduled Maintenance Outage.

10.6.2 Seller shall be responsible (at its own cost and expense) for timely obtaining, maintaining, and complying with all agreements, arrangements and permits necessary for delivery of the Product to the Point of Delivery. Upon the reasonable, written request of EPE, Seller shall make available to EPE copies of any environmental permits, plans, and/or studies related to the Energy Storage Facility.

10.7 Equivalent Full Cycles of ESS

Beginning on the Commercial Operation Date, EPE shall have the right to issue Charging Notices and Discharging Notices for the ESS, via AGC control, subject to the Operating Limitations; *provided,* that notwithstanding any provision in this ESA to the contrary, unless the requirements set forth in Section 3.11 are satisfied, the ESS shall be charged exclusively from the Generating Facility; *provided*, *further*, that notwithstanding anything to the contrary in this ESA, total cycles shall not exceed three hundred forty (340) Equivalent Full Cycles in any calendar year, or pro rata portion thereof for any partial year. If EPE desires to exceed three hundred forty (340) Equivalent Full Cycles in a calendar year, then the Parties shall meet and confer within fifteen (15) Days of such notice from EPE to Seller regarding any mutually agreed amendments to this ESA with regard to such additional Equivalent Full Cycles.

10.8 Sales to Third Parties

As of the start of the Test Period, Seller shall not sell or divert Product to a third Person.

10.9 ESS Performance Tests

10.9.1 Not later than one hundred eighty (180) Days before the Commercial Operation Date, Seller and EPE shall develop mutually agreeable written test protocols to quantify the ESS Unit Capabilities in accordance with Exhibit F. Seller will perform one (1) annual ESS Unit Capabilities test per Commercial Operation Year in accordance with those test protocols and procedures and promptly provide the results to EPE. With the exception of the cost of Charging Energy provided by EPE following Seller's receipt of a Grid Charging Interconnection Agreement, annual ESS Unit Capabilities testing will be performed at Seller's expense. Within thirty (30) Days of the completion of an Installed ESS Capacity or ESS Roundtrip Efficiency test, Seller may elect to conduct a single re-test. Upon completion of the single re-test, Seller must choose for the results of either test to be used as the basis of an adjustment to the ESS Roundtrip Efficiency payment as outlined in Section 10.10; *provided, however,* that EPE may request, by delivering written notice to Seller within fifteen (15) Days after the later of the completion of (i) the original ESS Unit Capabilities test or (ii) any single re-test conducted by Seller pursuant to this Section 10.9.1, and Seller will conduct, at EPE's expense, a single re-test of the ESS Unit Capabilities in accordance with the test protocols and procedures developed pursuant to Exhibit F. Seller will promptly provide the results of such re-test to EPE. Within thirty (30) Days of the completion such EPE-requested re-test, Seller must choose for the results of the original test or of any subsequent re-tests conducted pursuant to this Section 10.9.1 to be used as the basis of an adjustment to the ESS Roundtrip Efficiency payment as outlined in Section 10.10.

10.9.2 Upon a failure of the Energy Storage Facility to pass any ESS Unit Capabilities tests, Seller will have ninety (90) Days from the failed test date to cure any deficiencies in the test.

10.9.3 For all ESS Unit Capabilities tests and re-tests, Seller shall notify EPE at least ten (10) Days prior to the initiation of the test and EPE shall have the option to send a representative to the Energy Storage Facility to be present during such test.

10.9.4 For all ESS Unit Capabilities tests and re-tests, Seller shall provide a test report including all performance data, model simulations, calculations, and test reports to EPE for analysis but not approval.

10.9.5 Notwithstanding anything to the contrary, EPE may require additional capacity tests (each, an "***EPE Requested Capacity Test***") at any time upon five (5) Business Days' prior written notice to Seller if EPE reasonably believes that the actual Installed ESS Capacity of the Energy Storage Facility varies in any materially significant respect from the results of the most recent annual Installed ESS Capacity test conducted in accordance with Section 10.9.1 and Exhibit F. EPE may exercise its right to require an EPE Requested Capacity Test no more often than one (1) time per Commercial Operation Year. Each EPE Requested Capacity Test shall be performed at a mutually agreed upon time following Seller's receipt of EPE's notice requesting such EPE Requested Capacity Test, and each EPE Requested Capacity Test shall be performed in accordance with the test protocols and procedures developed pursuant to Exhibit F. If the Installed ESS Capacity of the Energy Storage Facility determined pursuant to an EPE Requested Capacity Test ("***EPE Tested Capacity***") is (i) less than or (ii) greater than, in either case the Installed ESS Capacity as determined pursuant to the most recent annual test conducted in accordance with Section 10.9.1 and Exhibit F, then, at the beginning of the Day following the completion of such EPE Requested Capacity Test, the EPE Tested Capacity shall become the new Installed ESS Capacity for all purposes under this ESA until the following annual test conducted in accordance with Section 10.9.1 and Exhibit F. All costs of any EPE Requested Capacity Test shall be borne by Seller. Within thirty (30) Days of the completion of an EPE Requested Capacity Test, Seller may elect to conduct a single re-test. Upon completion of the single re-test, Seller must choose for the results of either test to be used as the basis of an adjustment to the Installed ESS Capacity pursuant to this Section 10.9.5.

10.10 Guaranteed ESS Roundtrip Efficiency Payment

10.10.1 If the ESS Roundtrip Efficiency is greater than one (1) percentage point above the Guaranteed ESS Roundtrip Efficiency, EPE shall pay to Seller, in addition to other amounts due under this ESA, an amount equal to the Monthly Electricity Storage Cost, multiplied by (ESS Roundtrip Efficiency − Guaranteed ESS Roundtrip Efficiency − 1%).

10.10.2 If the ESS Roundtrip Efficiency is more than one (1) percentage point below the Guaranteed ESS Roundtrip Efficiency, Seller will pay to EPE an amount equal to the Monthly Electricity Storage Cost, multiplied by (Guaranteed ESS Roundtrip Efficiency − ESS Roundtrip Efficiency − 1%).

10.11 Availability Guarantees

Seller guarantees that the Energy Storage Facility shall be available to deliver Discharge Energy, store Energy or accept Charging Energy, and shall pay ESS Availability Damages, if any, in accordance with Exhibit I.

10.12 Charging Energy Management

10.12.1 Notwithstanding any other provisions of this ESA,

(a) during the Delivery Term:

(1) the Energy Storage Facility shall not be charged from any other source except from the Generating Facility (and, upon and following Seller's receipt of a Grid Charging Interconnection Agreement, the grid);

(2) unless Seller executes a Grid Charging Interconnection Agreement, or at times when grid charging is not permitted to occur under the Grid Charging Interconnection Agreement, the Energy Storage Facility shall only be charged using Energy Output (as defined in the PPA) and Seller shall not be required to charge the Energy Storage Facility during any period that Energy Output (as defined in the PPA) is unavailable; and

(3) EPE shall not issue any Charging Notice, instruction, order, notice, or other communication requesting or requiring the Energy Storage Facility to be charged from any source other than the Generating Facility (or, upon and following Seller's receipt of a Grid Charging Interconnection Agreement, the grid).

(b) at any and all times during the Term, the Energy Storage Facility may not be, and EPE shall not issue any Charging Notice, Discharging Notice, instruction, order, notice or other communication requesting or requiring the Energy Storage Facility to be, charged, discharged or operated in any manner which results in, or gives rise to:

(1) any reduction in Energy Output (as defined in the PPA) or any other negative impact on the Generating Facility's ability to generate Energy;

(2) any inconsistency with the Operating Procedures or the Operating Limitations; or

(3) any inconsistency with or breach of the Interconnection Agreements.

10.12.2 Notwithstanding any other provisions of this ESA, in the event of any conflict or inconsistency between or among this Section 10.12, the Operating Procedures, the Operating

Limitations, Section 10.5 or any other terms of this ESA, the terms and conditions of this Section 10.12 will prevail.

ARTICLE 11 RECS AND ENVIRONMENTAL ATTRIBUTES

11.1 Sale of Environmental Attributes

If future Environmental Attributes become available, this Article 11 shall apply.

11.1.1 Other than as specified in Section 11.1.4 and Section 11.1.5, effective from the date on which the Energy Storage Facility first makes Product available to EPE at the Point of Delivery, Seller shall transfer to EPE, free and clear of all claims, liens, security interests, and encumbrances, of any kind, nature, and description, all right, title, and interest in and to Environmental Attributes associated with the Energy Storage Facility. Upon generation and documentation of Environmental Attributes, Seller shall make the Environmental Attributes available to EPE no later than five (5) Business Days after the Environmental Attributes are created in WREGIS, subject to a day-for-day extension based on availability of the WREGIS website. The value of the Environmental Attributes transferred under this ESA shall be included in the ESS Capacity Payment Rate.

11.1.2 Seller and EPE shall execute all documents and instruments necessary to effect transfer of the Environmental Attributes to EPE or its respective designee(s).

11.1.3 Ownership by EPE of Environmental Attributes shall include any Environmental Attributes that are reserved or "banked" throughout the Term, but not used, sold, assigned or otherwise transferred during the Term. EPE may, to the extent permitted by Applicable Law and this ESA, assign its rights, title and interest in and to any Environmental Attributes associated with the Energy Storage Facility to one or more third parties under any transaction permitted by Applicable Law.

11.1.4 Tax Benefits in effect on the Execution Date of this ESA or any successor or other provision providing for a federal, state, and/or local tax credit related to the ownership or operation of any portion of the Energy Storage Facility shall be owned by Seller.

11.1.5 Seller shall register the Energy Storage Facility, as necessary, no later than thirty (30) Days after EPE notifies Seller of the availability of such Environmental Attributes, so that the Energy Storage Facility is compliant with reporting requirements related to Environmental Attributes and certification requirements under any applicable federal, state or regional program or Applicable Law. Notwithstanding the foregoing, Seller shall not be required to expend more than Five Thousand Dollars ($5,000) per MW annually and Ten Thousand Dollars ($10,000) per MW in the aggregate to maintain compliance due to regulatory changes relating to RECs.

ARTICLE 12 PURCHASE OPTION

12.1 EPE's Purchase Option on Seller Event of Default

Subject to, and without in any way limiting the terms of, Article 19 or any step-in or other rights of any Lender, and subject further to Applicable Law, if, prior to the Commercial Operation Date, (x) EPE terminates this ESA due to an uncured Seller Event of Default or (y) Seller terminates this ESA pursuant to Section 3.13, then EPE shall have the option to purchase the Energy Storage Facility and all rights of Seller therein or relating thereto (the "***Option***") in accordance with the provisions of this Article 12 for the greater of (i) the Fair Market Value (as determined in accordance with Section 12.2) or (ii) the amount which when applied pursuant to the applicable financing or Tax Equity Financing documents will (a) repay the Lenders in full all amounts owed to them, including principal, premium, interest, fees, breakage costs, penalties, expenses, indemnities, and any other amounts due upon acceleration, prepayment, termination or restructuring of any interest rate or other swaps or hedges entered into in connection with such financing, and (b) pay the Tax Equity Investors an amount sufficient for such Tax Equity Investors to achieve their target return on their overall tax equity investment (or if the Tax Equity Financing has a fixed date as the flip date, the amount necessary to allow the Tax Equity Investors to achieve a rate of return on their overall tax equity investment equal to the rate of return used to determine the flip date under the Tax Equity Financing documents) (the "***Return Amount***"); *provided, however,* that EPE will not have the right to exercise the Option if, as of the Early Termination Date, the Energy Storage Facility is owned, directly or indirectly, by Ultimate Parent. EPE shall indicate its preliminary interest with respect to the Option, if at all, by delivering to Seller a written notice of interest no more than thirty (30) Days after the Early Termination Date (the "***Preliminary Option Notice***"). If EPE fails to deliver the Preliminary Option Notice by such date, the Option shall terminate.

12.2 Determination of Fair Market Value of the Energy Storage Facility

12.2.1 Promptly following delivery of the Preliminary Option Notice, the Parties shall mutually agree to the fair market value of the Energy Storage Facility (the "***Fair Market Value***") and Seller shall provide EPE a calculation of the Return Amount, including all reasonably requested supporting documentation with respect to the calculation of the Return Amount. If EPE and Seller cannot mutually agree to a Fair Market Value of the Energy Storage Facility within fifteen (15) Days of delivery of the Preliminary Option Notice, then each of EPE and Seller shall select and retain, at each Party's own cost and expense, a nationally recognized independent appraiser with experience and expertise in appraising solar generation and energy storage facilities to determine separately the Fair Market Value of the Energy Storage Facility. Subject to the appraisers' execution and delivery to Seller of a suitable confidentiality agreement in a form reasonably acceptable to Seller, Seller shall provide both appraisers access to the Energy Storage Facility and its books and records during normal business hours and upon prior written notice. The appraisers shall act reasonably and in good faith to determine the Fair Market Value of the Energy

Storage Facility and the Parties shall use their best efforts to cause the appraisers to complete such determination no later than fifty (50) Days following delivery of the Preliminary Option Notice. If for any reason (other than a failure by Seller to provide access hereunder to EPE's appraiser), one of the appraisals is not completed within seventy (70) Days following delivery of the Preliminary Option Notice, the results of the other completed appraisal shall be deemed the Fair Market Value of the Energy Storage Facility.

12.2.2 Each Party may provide to both appraisers a list of factors which the Parties suggest the appraisers take into consideration when determining the Fair Market Value of the Energy Storage Facility, consistent with Prudent Utility Practices. Any information provided to an appraiser by one Party shall be provided to the other appraiser and the other Party at the same time, it being the intent of the Parties that the appraisers have access to the same information in determining the Fair Market Value of the Energy Storage Facility. EPE and Seller shall deliver the results of their respective appraisal to the other Party when completed. If so requested by either Party, the appraisals shall be exchanged simultaneously.

12.2.3 After both appraisals are completed and exchanged, the Parties and their appraisers shall promptly confer and attempt to agree upon the Fair Market Value of the Energy Storage Facility based on the appraisers' determinations. If, within twenty (20) Days after completion of both appraisals, the Parties cannot agree on the Fair Market Value of the Energy Storage Facility, and the values of the appraisals are within ten percent (10%) of each other, the Fair Market Value of the Energy Storage Facility shall be the simple average of the two appraisals. If the values of the two appraisals differ by ten percent (10%) or more, the first two appraisers shall choose a third nationally recognized independent appraiser with experience and expertise in appraising solar generation and energy storage facilities, or, if the first two appraisers fail to agree upon a third appraiser within ten (10) Days after the expiration of the twenty (20)-Day period following completion of both appraisals, such appointment shall be made by the American Arbitration Association upon application of either Party in accordance with the applicable rules and regulations of the American Arbitration Association for such selection. The third appraiser shall have access to the same information as was available to the other two appraisers. The Parties shall direct the third appraiser to determine the Fair Market Value of the Energy Storage Facility within fifty (50) Days following retention of the third appraiser. The costs and expenses of such third appraiser shall be shared equally by the Parties. Upon determination of the Fair Market Value of the Energy Storage Facility by the third appraiser, the Fair Market Value of the Energy Storage Facility will he the simple average of the three appraisal values completed in accordance with this Section 12.2.

12.3 Option Exercise

12.3.1 Within ten (10) Days following the confirmation of the calculation of the Return Amount and the determination of the Fair Market Value of the Energy Storage Facility pursuant to Section 12.2, and in no event later than one hundred eighty (180) Days following delivery of the

Preliminary Option Notice (regardless of whether the Fair Market Value of the Energy Storage Facility is determined and final), EPE shall notify Seller in writing, whether EPE elects to exercise the Option (the "***Final Option Notice***").

(a) If EPE fails to deliver a Final Option Notice by such applicable date or notifies Seller that it is electing not to exercise the Option, EPE's right to exercise the Option pursuant to Section 12.1 shall automatically terminate.

(b) If EPE delivers a valid and timely Final Option Notice electing to exercise the Option, Seller shall sell, transfer, assign and convey to EPE, and EPE shall purchase, receive and accept from Seller for the greater of (i) the Fair Market Value or (ii) the Return Amount, all of Seller's right, title and interest in and to the Energy Storage Facility, on an "AS IS, WHERE IS" basis, subject to any then-existing liens, claims, encumbrances, or rights of others arising through Seller as of the closing date of the final and binding agreement entered into by and between Seller and EPE in connection with the exercise of the Option. In connection with such sale, transfer, assignment and conveyance, Seller shall (x) use commercially reasonable efforts to cooperate with all reasonable requests of EPE made in connection with such sale, transfer, assignment and conveyance, including assigning or transferring to EPE, to the extent necessary to consummate such sale, transfer, assignment and conveyance, any material project agreements relating to the Energy Storage Facility and entered into by Seller prior to EPE's delivery of a valid and timely Final Option Notice, and for purposes of enabling EPE to obtain any and all applicable Permits that are or will be required to be obtained by EPE in connection with the design, construction, operation or maintenance of the Energy Storage Facility or the Site in compliance with Applicable Law; and (y) to the extent permitted by Applicable Law, provide EFE copies of all documents, instruments, plans, maps, specifications, manuals, drawings and other documentary materials relating to the design, construction, installation, operation, maintenance, modification and repair of the Energy Storage Facility as shall be in Seller's possession and shall be reasonably appropriate or necessary for the continued operation of the Energy Storage Facility.

12.3.2 If, despite the commercially reasonable and good faith efforts of each Party, the Parties fail to execute a final and binding agreement to facilitate the sale, transfer, assignment and conveyance of` the Energy Storage Facility in accordance with this Article 12 within forty-five (45) Days of EPE providing the Final Option Notice to Seller, then either Party may elect to terminate the Option and the Option shall be of no further force or effect.

ARTICLE 13 DEFAULT AND REMEDIES

13.1 Events of Default of Seller

13.1.1 Any of the following events shall constitute an Event of Default of Seller upon its occurrence and no cure period shall be applicable:

(a) Seller's dissolution or liquidation;

(b) Seller's assignment of this ESA (or any of its rights hereunder) for the benefit of creditors, except as permitted pursuant to Article 19;

(c) Seller's filing of a petition in voluntary bankruptcy or insolvency or for reorganization or arrangement under the bankruptcy laws of the United States or under any insolvency law of any state, or Seller voluntarily taking advantage of any such law by answer or otherwise;

(d) During the Delivery Term, the sale by Seller to a third party, or diversion by Seller for any use, of Product committed to EPE by Seller hereunder, except for Product that EPE fails to accept or pay for and except upon or during the continuation of any EPE Event of Default;

(e) Seller's actual fraud, material misrepresentation or willful misconduct in connection with this ESA; or

(f) Seller's failure to achieve the Commercial Operation Date for the Energy Storage Facility on or prior to the Outside Commercial Operation Date, except as a result of a Force Majeure Event or Interconnection Delay.

13.1.2 Any of the following events shall constitute an Event of Default of Seller upon the failure of Seller to cure such Event of Default within ten (10) Business Days after Seller's receipt of written notice from EPE of such Event of Default:

(a) Seller fails to provide and maintain in full force and effect the Security required pursuant to Article 20; or

(b) If Seller delivers a Seller Guaranty to satisfy the Security requirements set forth in Article 20 and (i) Seller Guarantor fails to make, when due, any payment required to be made in accordance with the terms of this ESA and the Seller Guaranty, (ii) Seller Guarantor fails to satisfy the requirements set forth in the definition of Seller Guarantor, or (iii) Seller Guarantor repudiates, disaffirms, disclaims, or rejects, in whole or in part, or challenges, the validity of the Seller Guaranty.

13.1.3 Any of the following events shall constitute an Event of Default of Seller upon the failure of Seller to cure such Event of Default within thirty (30) Days after Seller's receipt of written notice from EPE of such Event of Default:

(a) Seller's Abandonment of construction or operation of the Energy Storage Facility;

(b) Except to the extent arising from the acts or omissions of the Transmission Provider or EPE or resulting from a Force Majeure Event, Seller is not able to make Product available at the Point of Delivery as a result of the Energy Storage Facility failing to maintain interconnection service in accordance with the Interconnection Agreements or

Seller otherwise fails to maintain in effect any agreements required to make Product available at the Point of Delivery;

(c) Seller's failure to make any payment due to EPE under or in connection with this ESA (subject to Seller's rights with respect to disputed payments under Article 9 and net of outstanding damages and any other rights of offset that Seller may have pursuant to this ESA);

(d) The Energy Storage Facility fails, after the Commercial Operation Date, to maintain an Actual ESS Availability Percentage of at least eighty percent (80%) over any sequential period of two (2) consecutive Commercial Operation Years during the Delivery Term as calculated in accordance with Exhibit I; or

(e) Subject to Section 7.3 and Article 11, should RECs from Environmental Attributes become available, Seller fails to register the Energy Storage Facility or ensure registration of the RECs in accordance with the terms of this ESA.

13.1.4 Any of the following events shall constitute an Event of Default of Seller upon the failure of Seller to cure such Event of Default within sixty (60) Days after Seller's receipt of written notice from EPE of such Event of Default, or such longer period as may be necessary to effectuate a cure; *provided*, that Seller has commenced and is diligently pursuing a cure, not to exceed an additional thirty (30) Days:

(a) Seller's assignment of this ESA, or any Change of Control of Seller, or Seller's sale or transfer of its interest, or any part thereof, in the Energy Storage Facility, except as permitted in accordance with Article 19;

(b) Any representation or warranty made by Seller in this ESA shall prove to have been false or misleading in any material respect when made or ceases to remain true during the Term if such cessation would reasonably be expected to result in a material adverse impact on EPE;

(c) The filing of an involuntary case in bankruptcy or any proceeding under any other insolvency law against Seller as debtor or Ultimate Parent or any Affiliate that could materially impact Seller's ability to perform its obligations hereunder; *provided*, *however*, that Seller does not obtain a stay or dismissal of the filing within the cure period; or

(d) Seller's failure to comply with any other material obligation under this ESA that is not a separate Event of Default of Seller, which would result in a material adverse impact on EPE.

13.2 Events of Default of EPE

13.2.1 Any of the following shall constitute an Event of Default of EPE upon its occurrence, and no cure period shall be applicable:

(a) EPE's dissolution or liquidation; *provided*, that division of EPE into multiple entities shall not constitute dissolution or liquidation;

(b) EPE's assignment of this ESA (or any of its rights hereunder) for the benefit of creditors; or

(c) EPE's filing of a voluntary petition in bankruptcy or insolvency or for reorganization or arrangement under the bankruptcy laws of the United States or under any insolvency law of any State, or EPE voluntarily taking advantage of any such law by answer or otherwise.

13.2.2 Any of the following shall constitute an Event of Default of EPE upon the failure of EPE to cure such Event of Default within thirty (30) Days after EPE's receipt of written notice from Seller of such Event of Default:

(a) EPE's failure to make any payment due hereunder (subject to EPE's rights with respect to disputed payments under Article 9 and net of outstanding damages and any other rights of offset that EPE may have pursuant to this ESA).

13.2.3 Any of the following shall constitute an Event of Default of EPE upon the failure of EPE to cure such Event of Default within sixty (60) Days after EPE's receipt of written notice from Seller of such Event of Default, or such longer period as may be necessary to effectuate a cure; *provided*, that Seller has commenced and is diligently pursuing a cure, not to exceed an additional thirty (30) Days:

(a) The filing of an involuntary case in bankruptcy or any proceeding under any other insolvency law against EPE, *provided*, however, that EPE does not obtain a stay or dismissal of the filing within the cure period;

(b) EPE's assignment of this ESA, except as permitted in accordance with Article 19;

(c) Any representation or warranty made by EPE in this ESA shall prove to have been false or misleading in any material respect when made or ceases to remain true during the Term if such cessation would reasonably be expected to result in a material adverse impact on Seller; or

(d) EPE's failure to comply with any other material obligation under this ESA that is not a separate Event of Default of EPE, which would result in a material adverse impact on Seller.

13.3 Damages Prior to Termination

13.3.1 Upon the occurrence of an Event of Default, and subject in each case to the limitation on damages set forth in Sections 13.7 and 13.11, the Non-Defaulting Party shall have

the right to (i) collect damages accruing prior to the Early Termination Date of this ESA from the Defaulting Party as set forth in Section 13.3.2, (ii) suspend performance, (iii) with respect to a Seller Event of Default, exercise its rights pursuant to Section 13.10 with respect to any Security, and (iv) exercise its rights to terminate this ESA pursuant to Section 13.4.

13.3.2 For all Events of Default, the Non-Defaulting Party shall be entitled to receive from the Defaulting Party all of the damages incurred by the Non-Defaulting Party in connection with such Event of Default prior to the Early Termination Date as set forth in this ESA; *provided* that if an Event of Default has occurred and has continued uncured for a period of one hundred eighty (180) Days, the Non-Defaulting Party shall be required to either waive its right to collect further damages on account of such Event of Default or elect to terminate this ESA as provided for in Section 13.4. If Seller is the Defaulting Party, the Parties agree that the damages recoverable by EPE hereunder on account of an Event of Default of Seller shall include an amount of cover damages equal to Replacement ESS Costs minus the product of (x) the quantity of Product so replaced and (y) the ESS Capacity Payment Rate. Further, Seller acknowledges and agrees that in addition to the foregoing, Seller shall be obligated to pay EPE any such damages associated with replacement of Product notwithstanding the availability or prices of electric energy and capacity from other fuel sources, such as natural gas. Seller also shall be obligated to pay EPE any penalties levied by any Governmental Authority in connection with Seller's failure to deliver to EPE any Environmental Attributes that may become available pursuant to this ESA, to the extent such failure arises out of Seller's negligence or willful misconduct; *provided*, that EPE has used commercially reasonable efforts to avoid, minimize or mitigate the same. Seller acknowledges that EPE entered into this ESA for the procurement of Product, which includes Environmental Attributes. If EPE is the Defaulting Party, the Parties agree that damages recoverable by Seller hereunder on account of an Event of Default of EPE shall include costs and losses incurred by Seller due to such Event of Default, including, to the extent applicable, an amount of cover damages equal to the quantity of Product produced by Seller following such Event of Default, plus, to the extent that Seller is unable to produce Product due to the Event of Default of EPE, an additional quantity equal to the amount of Product that would have been produced by Seller absent such Event of Default of EPE, each multiplied by the ESS Capacity Payment Rate; *provided*, that the foregoing amount shall be reduced by an amount equal to (A) the amount of any revenues that Seller, using commercially reasonable efforts, is able to obtain by selling Product to a third party or into the market, less (B) Seller's costs and expenses incurred to effectuate any such sales.

13.4 Termination

Upon the occurrence of an Event of Default that is not otherwise cured in accordance with Section 13.1 or 13.2, as applicable, the Non-Defaulting Party shall have the right to declare a date, which shall be between fifteen (15) and sixty (60) Days after the Defaulting Party's receipt of written notice thereof, upon which this ESA shall terminate ("***Early Termination Date***"). Upon the effective designation of an Early Termination Date, the Non-Defaulting Party will have the right to immediately suspend performance under this ESA, except that Seller may not suspend

performance of its obligation to post and maintain Development Security and Delivery Term Security in accordance with Article 20. Neither Party shall have the right to terminate this ESA except as provided for upon the occurrence of an Event of Default as described above or as may be otherwise explicitly provided for in this ESA. Upon the termination of this ESA under this Section 13.4 for an Event of Default that is not otherwise cured in accordance with Section 13.1 or 13.2, as applicable, the Non-Defaulting Party shall be entitled to receive the Termination Payment from the Defaulting Party. As soon as practicable after the Early Termination Date, the Non-Defaulting Party shall (a) calculate the Termination Payment, and (b) give notice to the Defaulting Party of the amount of the Termination Payment. The notice shall include a written statement explaining in reasonable detail the calculation of such amount and the sources for such calculation. The Termination Payment shall be made to the Non-Defaulting Party, as applicable, within ten (10) Business Days after such notice is effective. If Seller is the Defaulting Party, the Termination Payment will equal the EPE Termination Payment, and if EPE is the Defaulting Party, the Termination Payment will equal the Seller Termination Payment. Notwithstanding the foregoing, if the Commercial Operation Date has not occurred by the Outside Commercial Operation Date, EPE may terminate this ESA in accordance with this Section 13.4, and the EPE Termination Payment will be an amount equal to the Development Security less any Delay Damages already paid to EPE. Neither Party shall have liability for damages or failure to deliver or purchase Product after the effective date of such termination, including Replacement ESS Costs.

13.4.1 In the event that Seller is the Defaulting Party, as soon as practicable after notice of the Early Termination Date, EPE shall calculate the EPE Termination Payment in a commercially reasonable manner as of the Early Termination Date in accordance with this Section 13.4.1. The notice shall include a written statement explaining in reasonable detail the calculation of such amount. In calculating such amount, EPE shall use information from third parties who may include dealers in the relevant markets, end-users of the relevant product, information vendors and other sources of market information. EPE shall not have to enter into a replacement contract to establish an EPE Termination Payment.

13.4.2 In the event that EPE is the Defaulting Party, as soon as practicable after notice of the Early Termination Date, Seller shall deliver written notice to EPE of the amount of the Seller Termination Payment. The notice shall include a written statement explaining in reasonable detail the calculation of such amount. In calculating such amount, Seller shall use information from third parties who may include dealers in the relevant markets, end-users of the relevant product, information vendors and other sources of market information. Seller shall not have to enter into a replacement contract to establish a Seller Termination Payment.

13.5 [Reserved]

13.6 Remedies Cumulative

Subject to limitations on damages set forth in Sections 13.7 and 13.11, each right or remedy of the Parties provided for in this ESA shall be cumulative of and shall be in addition to every

other right or remedy provided for in this ESA, and the exercise, or the beginning of the exercise, by a Party of any one or more of the rights or remedies provided for herein shall not preclude the simultaneous or later exercise by such Party of any or all other rights or remedies provided for herein.

13.7 Waiver and Exclusion of Other Damages

The Parties confirm that the express remedies and measures of damages provided in this ESA satisfy its essential purposes. If no remedy or measure of damages is expressly herein provided, the obligor's liability shall be limited to direct, actual damages only. Unless expressly provided herein or included in a third party claim covered by the indemnification provisions in Section 21.1 or arising from fraud or willful misconduct, neither Party shall be liable to the other Party for consequential, incidental, punitive, exemplary or indirect damages, lost profits or other business interruption damages by statute, in tort or contract, except to the extent expressly provided herein and except to the extent constituting or relating to lost or foregone Tax Benefits. To the extent any damages required to be paid hereunder are deemed liquidated, the Parties acknowledge that the damages are difficult or impossible to determine, that otherwise obtaining an adequate remedy is inconvenient, and that the liquidated damages constitute a reasonable approximation of the harm or loss. It is the intent of the Parties that except as expressly provided herein, the limitations herein imposed on remedies and the measure of damages be without regard to the cause or causes related thereto, including the negligence of any Party, whether such negligent be sole, joint or concurrent, or active or passive.

13.8 Payment of Amounts Due to EPE

Without limiting any other provisions of this Article 13 and at any time before or after termination of this ESA, EPE may send Seller an invoice for such damages or other amounts as are due to EPE at such time from Seller under this ESA, and such invoice shall be payable in the manner, and in accordance with the applicable provisions, set forth in Article 9, including the provision for late payment charges.

13.9 Duty to Mitigate

Each Party agrees that it has a duty to mitigate damages and covenants that it will use commercially reasonable efforts to minimize any damages it may incur as a result of the other Party's performance or non-performance of this ESA.

13.10 Security Rights

Upon or at any time after the occurrence and during the continuation of an Event of Default enumerated in Section 13.1 or an Early Termination Date affecting Seller, EPE may exercise any of the rights and remedies with respect to any Security, including any ancillary rights and remedies under Applicable Law then in effect. EPE shall apply the proceeds of the Security realized upon

the exercise of any such rights or remedies to reduce Seller's obligations under this ESA, subject to EPE's obligation to return any surplus proceeds remaining after such obligations are satisfied in full.

13.11 Limit on Seller Liability

Notwithstanding any other provision of this ESA, Seller's aggregate liability under, arising out of or in connection with this ESA (including liability for any Delay Damages, ESS Availability Damages and any termination payment or damages arising hereunder) shall not exceed the amount of the Security required to be posted at the time such liability is incurred pursuant to Section 20.1.

ARTICLE 14 CONTRACT ADMINISTRATION AND NOTICES

14.1 Notices in Writing

Notices required by this ESA shall be addressed to the other Party at the addresses noted in Exhibit D as either Party updates them from time to time by written notice to the other Party. Any notice, request, consent, or other communication, including any Charging Notice and Discharging Notice, required or authorized under this ESA to be given by one Party to the other Party shall be in writing. It shall either be hand delivered or mailed via overnight service with signature required upon receipt, to the representative of said other Party. If hand delivered, the notice, request, consent or other communication shall be simultaneously sent by facsimile or other electronic means. Any such notice, request, consent, or other communication shall be deemed to have been received by the close of the Business Day on which it was hand delivered or transmitted electronically (unless hand delivered or transmitted after such close in which case it shall be deemed received at the close of the next Business Day). Real-time or routine communications concerning operation of the Energy Storage Facility shall be exempt from this Section 14.1.

14.2 Representative for Notices

Each Party shall maintain a designated representative to receive notices, who shall be identified on Exhibit D. Either Party may, by written notice to the other Party, change the representative or the address to which such notices and communications are to be sent.

14.3 Authority of Representatives

The Parties' representatives designated above shall have authority to act for their respective principals in all technical matters relating to performance of this ESA and to attempt to resolve disputes or potential disputes. However, in their capacity as representatives, they shall not have the authority to amend or modify any provision of this ESA.

14.4 Records

Seller and EPE shall each keep and maintain complete and accurate records and all other data required by each of them for the purposes of proper administration of this ESA, including but not limited to books and records necessary for billing and payments and such records as may be required by any Governmental Authority or pursuant to Applicable Law. All records of Seller and EPE pertaining to the operation of the Energy Storage Facility or this ESA as specified herein or otherwise shall be maintained at the Energy Storage Facility or in an office of Seller or EPE, as applicable, in such format as may be required by Applicable Law and/or any Governmental Approval. Each Party shall have the right at its sole cost and expense, upon reasonable prior written notice to the other Party, during normal business hours, to examine and/or make copies of the records and data of such other Party relating to this ESA (including all records and data relating to or substantiating any charges paid by or to such other Party, MWh of delivered Discharge Energy, MWh of delivered Charging Energy, Seller's operating procedures, the Energy Storage Facility equipment manuals and Operating Records). All records required hereunder shall be maintained in accordance with, and for the applicable time periods required by, Applicable Law and the Party's retention policies, but in no event less than five (5) years after the final payment is made under this ESA. Seller shall provide EPE copies of Operating Records upon EPE's request.

14.4.1 Operating and Maintenance Records. Seller shall maintain an accurate and up-to-date operating log, in electronic format, at the Energy Storage Facility that will include, without limitation, dispatch and scheduled Discharge Energy delivered, Charging Energy received, and House Energy consumption; changes in operating status; planned outages, deratings and curtailments; any unusual conditions found during inspections; environmental records including environmental permits, plans, and/or studies; meteorological data; maintenance; any other operating or maintenance records as may be required by state or federal regulatory authorities and WECC and any other information required under Prudent Utility Practice or any Energy Storage Facility agreement (in the prescribed format); and EPE and Seller Forced Outages.

14.4.2 Billing and Payment Records. To facilitate payment and verification, Seller and EPE shall keep all books and records necessary for billing and payments in accordance with the provisions of Article 9 and grant the other Party reasonable access to those records.

14.4.3 Energy Storage Facility Development Records and Data Submissions. Seller shall submit or cause to be submitted to EPE the following documents on or before the dates specified below:

(a) No later than thirty (30) Days after the Execution Date and ending on the Commercial Operation Date, (i) monthly construction progress reports in such form as may be agreed to by EPE in accordance with Section 10.1.1 and Section 10.1.2, and (ii) reports, when and as Seller becomes aware, of any new condition or event that may have a material adverse effect on the timely completion of the Energy Storage Facility.

(b) No later than thirty (30) Days prior to the start of the Test Period, (i) evidence demonstrating that Seller has obtained all Governmental Approvals then required to be obtained for the ownership, operation and maintenance of, and the supply of Product from, the Energy Storage Facility in accordance with this ESA, and (ii) a list identifying the remaining Governmental Approvals for which Seller is responsible under the terms of this ESA, which Governmental Approvals are not yet required for the operation and maintenance of, and the supply of Product from, the Energy Storage Facility, together with a plan for obtaining such Governmental Approvals and an estimate of the time within which such Governmental Approvals will be obtained by Seller; *provided*, *however*, that the plan for obtaining any outstanding Governmental Approvals from any Governmental Authority which address environmental, health and safety matters shall be reasonably acceptable to EPE.

(c) As soon as available, but not later than sixty (60) Days following the Commercial Operation Date for the Energy Storage Facility, two (2) copies of all results of Commissioning Tests performed on the ESS.

(d) Upon request by EPE, one (1) signed and sealed copy of all as-built drawings for the Energy Storage Facility, including the civil and architectural works.

(e) The receipt of the above schedules, data, certificates and reports by EPE shall not be construed as an endorsement by EPE of the design of the Energy Storage Facility, does not constitute a warranty by EPE as to the safety, durability or reliability of the Energy Storage Facility, otherwise relieve Seller of any of its obligations or potential liabilities under the Energy Storage Facility contracts or, except with respect to the obligations of EPE to maintain the confidentiality of documents and information received by it, impose any obligation or liability on EPE.

14.5 Provision of Real-Time Data

Upon request by EPE, Seller shall provide real-time electronic access to EPE of all meteorological and other related data collected at the Energy Storage Facility and corresponding unit availability data.

14.6 Examination of Records

EPE may review operating procedures, equipment manuals, Operating Records and data kept by Seller relating to transactions under and administration of this ESA, at any time during the period the records are required to be maintained, from time to time upon request and during normal business hours. EPE shall have the right, upon reasonable notice and at its sole expense (unless Seller has defaulted under this ESA, in which case Seller will bear the expense), to examine the records of Seller to the extent reasonably necessary to verify the accuracy of any statement, charge or computation made pursuant to this ESA. If any such examination reveals any inaccuracy in any invoice, the necessary adjustments in such invoice and any underpayment by EPE will be paid,

and any overpayment by EPE will be reimbursed by Seller, promptly in accordance with payment provisions in this ESA.

14.7 Exhibits

Either Party may change the information for its notice addresses in Exhibit D at any time without the approval of the other Party. Changes to Exhibit A are subject to the requirements of Sections 3.2, 3.3, and 10.1.3. Exhibit B and Exhibit E may be changed at any time with the mutual consent of both Parties.

14.8 Resolution of Issues

The Parties agree that it is in the best interest of both Parties to attempt to resolve disputes that arise under this ESA in a quick and inexpensive manner. To that end, the Parties commit to use commercially reasonable efforts to resolve disputes informally. For all disputes that arise under this ESA, the Parties immediately, through their designated representatives, shall negotiate with one another in good faith in order to reach resolution of the dispute. Such negotiation shall commence within five (5) Days of the date of delivery of written notice from one Party to the other Party notifying that Party of the nature of the dispute, including statements describing in detail the issues and claims surrounding such dispute (each, a "***Dispute Notice***"). In the event that the Parties' cannot agree to a resolution of the dispute within thirty (30) Days after delivery of a Dispute Notice, each of the Parties shall submit such dispute to its respective senior officer or official (such senior officer or official to be selected by each of the Party's in their sole discretion, provided such senior officer or official has authority to bind the respective Party). Within five (5) Business Days after submitting such dispute to the senior officers or officials of each Party, the senior officers or officials for both Parties shall meet and negotiate in good faith to resolve the dispute, *provided* that a failure to deliver a Dispute Notice shall not prejudice either Party's right to submit such dispute to litigation. In the event that the senior officers or officials cannot resolve such dispute within thirty (30) Days after the matter was submitted to them, either Party may seek all legal and equitable remedies. The Parties shall continue to perform each of their respective obligations under this ESA during the pendency of any dispute; *provided*, that this obligation shall not apply after the termination of this ESA (except with respect to payments of amounts due and owing under this ESA).

ARTICLE 15 FORCE MAJEURE

15.1 Definition

15.1.1 Neither Party will be considered to be in default in respect to any obligation hereunder if delays in or failure of performance is due to a Force Majeure Event, except for the obligation to pay monies due. A "***Force Majeure Event***" shall mean (a) any Supply Chain Event arising after the Execution Date, or (b) any event or circumstance that arises after the Execution

Date that is beyond the reasonable control of and is not caused by the negligence or lack of due diligence of the affected Party or its contractors or suppliers and that wholly or partly prevents or delays the performance of the affected Party other than any obligations to pay monies due. Force Majeure Events of the type in the foregoing clause (b) may include, but are not limited to: actions or inactions of civil or military authority (including courts and governmental or administrative agencies), acts of God, war, riot or insurrection, terrorism, blockades, embargoes, sabotage (including arson and vandalism), pandemics, epidemics, explosions and fires not originating in the Energy Storage Facility, hurricanes, floods, strikes, lockouts or other labor disputes (not caused by the failure of the affected Party to comply with the terms of a collective bargaining agreement), and any actions or any demonstrable or manifest inactions of a Governmental Authority. Each Party acknowledges the effects of COVID-19 as of the Execution Date, and that no delay or failure in performance is expected based on the scope of such effects as of the Execution Date. Force Majeure relief related to COVID-19 and its effects shall be permitted only to the extent of material direct impacts of COVID-19 of which the Party was not aware, and should not reasonably have anticipated, as of the Execution Date, and provided that the criteria in the first sentence of this Section 15.1.1 are met.

15.1.2 Equipment breakdown or the inability of Seller to use equipment due to its design, construction, operation, maintenance, or a failure by Seller to obtain on a timely basis and maintain a necessary permit or other regulatory approval shall not be considered a Force Majeure Event, unless Seller can demonstrate that such delays or non-performance were due to circumstances that would constitute a Force Majeure Event.

15.1.3 Notwithstanding the foregoing, the term Force Majeure Event does not include the following, except to the extent constituting or arising from a Supply Chain Event (i) inability by Seller to procure equipment for the Energy Storage Facility or any component parts therefor, for any reason (the risk of which is assumed by Seller); (ii) any other acts or omissions of any third party acting on behalf of Seller, including any vendor, materialman, customer, or supplier of Seller, unless such acts or omissions are themselves excused by reason of a Force Majeure Event; (iii) any full or partial curtailment in the electric output of the Energy Storage Facility that is caused by or arises from a mechanical or equipment breakdown, or other mishaps, events or conditions, attributable to normal wear and tear except where such event or condition was due to circumstances that would constitute a Force Majeure Event; (iv) changes in market conditions or other events or circumstances that affect the cost of equipment, labor, materials or supplies, or that affect demand for power; or (v) except as set forth in Section 15.1.1, any labor strikes, slowdowns or stoppages, or other labor disruptions against a Party or its contractors or subcontractors.

15.1.4 In no event will any delay or failure of performance caused by a Force Majeure Event extend this ESA beyond the Term. Notwithstanding any other provision in this ESA to the contrary, in the event that any delay or failure of performance caused by a Force Majeure Event affecting Seller continues for an uninterrupted period of three hundred sixty (360) Days from its inception, either Party (or EPE as provided in Section 3.6) may, at any time following the end of

such period, terminate this ESA upon written notice to the affected Party, without further obligation by either Party except as to costs and balances incurred prior to the effective date of such termination. Upon any such termination of this ESA, EPE shall promptly, but in no event more than ten(10) Business Days following the date of such termination, return any outstanding Security to Seller.

15.1.5 Except as otherwise provided in this ESA, each Party shall be excused from performance when non-performance was caused, directly or indirectly, by a Force Majeure Event but only and to the extent thereof, and existence of a condition of Force Majeure Event shall not relieve the Parties of certain obligations under this ESA (including payment obligations) to the extent that such performance of such obligations is not precluded by the condition of Force Majeure Event.

15.2 Notification Obligations

In the event of any delay or non-performance resulting from a Force Majeure Event, the Party claiming that a Force Majeure Event has occurred shall notify the other Party, in writing and in accordance with the requirements set forth in Section 14.1, as soon as reasonably practicable, but in no event more than five (5) Business Days after becoming aware of the occurrence of such Force Majeure Event. Any such notice shall include the nature and cause of such Force Majeure Event, the date of commencement thereof, the anticipated duration thereof, and shall indicate whether any deadlines or date(s) imposed hereunder may be affected thereby, in each case to the extent known by Seller at the time such notice is provided. Any suspension of performance by the Party claiming that a Force Majeure Event has occurred shall be of no greater scope and of no greater duration than is necessary. A Party claiming that a Force Majeure Event has occurred shall (a) not be entitled to relief therefor unless and until it has delivered a notice therefor as required in this Section 15.2, and (b) notify the other Party of the cessation of the Force Majeure Event or of the conclusion of the affected Party's cure for the Force Majeure Event, in either case as soon as reasonably practicable.

15.3 Duty to Mitigate

The Party claiming that a Force Majeure Event has occurred shall use its commercially reasonable efforts to cure the event or condition preventing its performance of this ESA and shall keep the other Party reasonably apprised of the status of the Force Majeure Event.

ARTICLE 16 REPRESENTATIONS, WARRANTIES AND COVENANTS

16.1 Seller's Representations, Warranties and Covenants

Seller hereby represents and warrants, with respect to Section 16.1(a) through 16.1(h), and covenants, with respect to Section 16.1(i) through 16.1(k), as follows:

(a) Seller is a limited liability company duly organized, validly existing and in good standing under the laws of the State of Delaware. Seller is qualified to do business in each other jurisdiction where the failure to so qualify would have a material adverse effect on the business or financial condition of Seller; and Seller has all requisite power and authority to conduct its business, to own its properties, and to execute, deliver, and perform its obligations under this ESA.

(b) The execution, delivery, and performance of its obligations under this ESA by Seller have been duly authorized by all necessary limited liability company action, and do not and will not:

(1) require any consent or approval by any governing body of Seller, other than that which has been obtained and is in full force and effect;

(2) violate any Applicable Law, or violate any provision in any formation documents of Seller, the violation of which could have a material adverse effect on the ability of Seller to perform its obligations under this ESA;

(3) result in a breach or constitute a default under Seller's formation documents or bylaws, or under any agreement relating to the management or affairs of Seller or any indenture or loan or credit agreement, or any other agreement, lease, or instrument to which Seller is a party or by which Seller or its properties or assets may be bound or affected, the breach or default of which could reasonably be expected to have a material adverse effect on the ability of Seller to perform its obligations under this ESA; or

(4) result in, or require the creation or imposition of any mortgage, deed of trust, pledge, lien, security interest, or other charge or encumbrance of any nature (other than as may be contemplated by this ESA) upon or with respect to any of the assets or properties of Seller now owned or hereafter acquired, the creation or imposition of which could reasonably be expected to have a material adverse effect on the ability of Seller to perform its obligations under this ESA.

(c) Subject to the satisfaction of the conditions precedent set forth in Article 6, the obligations of Seller under this ESA are valid and binding obligations of Seller.

(d) The execution and performance of this ESA will not conflict with or constitute a breach or default under any contract or agreement of any kind to which Seller is a party or any judgment, order, statute, or regulation that is applicable to Seller or the Energy Storage Facility.

(e) To the knowledge of Seller, and except for those permits, consents, approvals, licenses and authorizations identified in Exhibit E, which Seller anticipates will be obtained by Seller in the ordinary course of business, all Governmental Approvals

necessary for Seller's execution, delivery and performance of this ESA have been duly obtained and are in full force and effect.

(f) Seller has not sold, delivered or transferred the Environmental Attributes to any other Person, in whole or in part.

(g) All right, title and interest in and to the Environmental Attributes are free and clear of any liens, Taxes, claims, security interests or other encumbrances except for any right or interest by any entity claiming through EPE.

(h) Each Environmental Attribute complies with the requirements set forth in the New Mexico Renewable Energy Act, NMSA 1978, § 62-16-1 *et seq*., and Title 17.9.572 NMAC.

(i) Seller shall disclose to EPE the extent of, and as soon as it is known to Seller, any violation of any Applicable Laws arising out of the construction of the Energy Storage Facility, the presence of Environmental Contamination at the Energy Storage Facility (actual or alleged), or the existence of any past or present enforcement, legal, or regulatory action or proceeding relating to such Environmental Contamination.

(j) During the Delivery Term, Seller shall have good and marketable title to the Environmental Attributes.

(k) Seller shall provide copies to EPE of any amendments to the Interconnection Agreements and the Shared Facilities Agreement.

16.2 EPE's Representations and Warranties

EPE hereby represents and warrants as follows:

(a) EPE is a corporation duly organized, validly existing and in good standing under the laws of the State of Texas and is qualified in each other jurisdiction where the failure to so qualify would have a material adverse effect upon the business or financial condition of EPE. EPE has all requisite power and authority to conduct its business, to own its properties, and to execute, deliver, and perform its obligations under this ESA.

(b) The execution, delivery, and performance of its obligations under this ESA by EPE have been duly authorized by all necessary corporate action, and do not and will not:

(1) require any consent or approval of EPE's shareholders, members, managers and/or directors, except as set forth in Section 6.1(b);

(2) violate any Applicable Law, or violate any provision in any corporate documents of EPE, the violation of which could have a material adverse effect on the ability of EPE to perform its obligations under this ESA;

(3) result in a breach or constitute a default under EPE's corporate charter or bylaws, or under any agreement relating to the management or affairs of EPE, or any indenture or loan or credit agreement, or any other agreement, lease, or instrument to which EPE is a party or by which EPE or its properties or assets may be bound or affected, the breach or default of which could reasonably be expected to have a material adverse effect on the ability of EPE to perform its obligations under this ESA; or

(4) result in, or require the creation or imposition of, any mortgage, deed of trust, pledge, lien, security interest, or other charge or encumbrance of any nature (other than as may be contemplated by this ESA) upon or with respect to any of the assets or properties of EPE now owned or hereafter acquired, the creation or imposition of which could reasonably be expected to have a material adverse effect on the ability of EPE to perform its obligations under this ESA.

(c) Subject to the satisfaction of the conditions precedent set forth in Article 6, this ESA is a valid and binding obligation of EPE.

(d) The execution and performance of this ESA will not conflict with or constitute a breach or default under any contract or agreement of any kind to which EPE is a party or any judgment, order, statute, or regulation that is applicable to EPE.

(e) To the knowledge of EPE, all required Governmental Approvals necessary for EPE's execution, delivery and performance of this ESA have been duly obtained and are in full force and effect, regardless of whether any approval from NMPRC for the execution and performance of this ESA has been obtained.

ARTICLE 17 INSURANCE

17.1 Evidence of Insurance

Seller shall, at least thirty (30) Days prior to the Commercial Operation Date, and thereafter within thirty (30) Days after the annual insurance policy renewal or update or change of any insurance policy required to be maintained pursuant to this ESA, provide EPE with two (2) copies of insurance certificates evidencing the insurance coverages required to be maintained by Seller in accordance with Exhibit G and this Article 17 along with endorsements required below in Section 17.3, and a list of any other endorsements to the policy that limit the coverage provided by the ISO form with regard to this Energy Storage Facility. All such insurance shall be primary insurance. All policies shall be written with insurers rated at least A- VII by A.M. Best or that EPE, in its reasonable discretion, deems acceptable (such acceptance shall not be unreasonably withheld or delayed by EPE). Seller's liability under this ESA shall not be limited to the amount of insurance coverage required herein.

17.2 Term and Modification of Insurance

17.2.1 Seller may self-insure either all or any portion of the foregoing coverages so long as there is no material decrease in its net worth or means that renders the same insufficient for purposes of self-insurance. If at any time during the Term EPE, in its reasonable discretion, determines that it will no longer accept self-insurance from Seller, EPE shall provide notice to Seller and Seller shall obtain the insurance coverages required by Exhibit G within sixty (60) Days.

17.2.2 EPE shall have the right, at times deemed appropriate to EPE during the Term, to request Seller to modify the insurance minimum limits specified in Exhibit G in order to maintain reasonable coverage amounts. Seller shall make commercially reasonable efforts to comply with such request.

17.3 Endorsements and Other Requirements

17.3.1 Seller shall provide endorsements evidencing that the insurers shall provide EPE thirty (30) Days' prior written notice of non-renewal or cancellation of insurance (except that such notice shall be ten (10) Days for non-payment of premiums) and endorsements that waive all rights of subrogation against EPE and its Affiliates, officers, directors, agents, subcontractors and employees.

17.3.2 Seller shall provide endorsements providing that the insurance required under this ESA is primary and non-contributory with respect to other insurance carried by EPE.

17.3.3 Seller shall provide endorsements providing that the liability insurance required pursuant to paragraphs (b), (c) and (d) of Exhibit G names EPE and its Affiliates, officers, directors, and employees as additional insureds for both ongoing and completed operations but only to the extent EPE (or other additional insured) is vicariously liable for the negligence, acts or omissions of Seller. The liability insurance required pursuant to paragraphs (b) and (d) of Exhibit G shall include a standard ISO or an equivalent separation of insureds clause and will not include a cross-suit exclusion applicable to claims brought by or against an additional insured.

ARTICLE 18 LEGAL AND REGULATORY COMPLIANCE

18.1 Applicable Laws

Each Party shall at all times comply with all Applicable Laws. Each Party shall promptly notify the other Party of any material investigations, notices of alleged violations or findings of violation of Applicable Law from any Governmental Authority, including any audit, notification, inspection or inquiry that has been commenced by any Governmental Authority in respect of a potential violation of Applicable Law with regard to the Energy Storage Facility or this ESA. Seller shall give all required notices, shall timely procure and maintain all Seller required permits, and

shall timely pay all charges and fees in connection therewith. Seller shall make available to EPE, upon reasonable request and at EPE's cost (other than the normal, customary and reasonable costs of Seller), any personnel or records relating to the Energy Storage Facility or this ESA to the extent EPE requires the same to fulfill any regulatory reporting requirements, or for purposes of litigation or regulatory proceedings, including but not limited to, litigation or proceedings before the NMPRC, FERC, or other regulatory bodies. The Parties shall treat information disclosed pursuant to this Section 18.1 in confidence in accordance with Article 24, unless such information is public information.

18.2 Governmental Approvals

Each Party shall timely and lawfully procure and maintain in good standing, at its own cost and expense, all Governmental Approvals and Additional Consents and shall timely and properly pay its respective charges and fees in connection therewith. EPE, at its sole cost and expense, may seek approval from NMPRC for the execution and performance of this ESA and Seller shall reasonably cooperate with EPE in its efforts to obtain such approval, *provided* that the Parties (i) shall not be obligated to obtain any such approval from NMPRC, (ii) shall be obligated to perform all of their obligations under this ESA regardless of whether NMPRC grants such approval or imposes any conditions in connection with such approval. In connection with any request by EPE for reasonable cooperation of Seller, EPE agrees to reimburse Seller for any external legal or other third-party costs incurred by Seller in connection with such cooperation.

18.3 [Reserved]

18.4 Compliance with Reliability Standards

To the extent that new reliability standards applicable to the operation and maintenance of the Energy Storage Facility are promulgated by the WECC, NERC, FERC, or NMPRC, or any successor agencies, any and all costs incurred as a result of actions required for compliance with the new reliability standards shall be borne by Seller. If Seller fails, through negligent action or negligent inaction, to comply with reliability standards related to the operation and maintenance of the Energy Storage Facility, and the lack of compliance results in monetary penalties being assessed to EPE by WECC, NERC, FERC or any successor agency, then Seller shall reimburse EPE for Seller's share of such monetary penalties resulting directly from Seller's negligent action or inaction. For the avoidance of doubt, Seller's obligations under this Section 18.4 are subject to the terms of Section 22.2, and Seller's liability under or arising out of this Section 18.4 shall not exceed the Compliance Cost Cap; *provided,* that Seller's obligation to reimburse EPE under the second sentence of this Section 18.4 shall not be limited by the Compliance Cost Cap.

18.5 Compliance Information

Each Party shall, for the purpose of gathering information and/or providing oral or written reports, testimony, affidavits or other submissions relevant to any Governmental Approvals, Non-

Governmental Compliance Obligations, Additional Consents, Applicable Laws or in connection with any litigation, arbitration or administrative proceeding before any authority of competent jurisdiction: (i) deliver or cause to be delivered to the other Party any necessary or required certificates of its officers, accountants, engineers or agents; and/or (ii) make available necessary personnel with knowledge as to such matters.

ARTICLE 19 ASSIGNMENT AND OTHER TRANSFER RESTRICTIONS

19.1 No Assignment Without Consent

Except as permitted in this Article 19, neither Party shall sell, transfer, or assign this ESA, in whole or in part, and Seller shall not sell, transfer or assign the Energy Storage Facility, in whole or in part, without the prior written consent of the other Party, which consent shall not be unreasonably withheld, delayed or conditioned and so long as any proposed assignee satisfies the conditions set forth in this Article 19.

19.1.1 EPE's consent shall not be required for: (i) any assignment or transfer of this ESA by Seller to an Affiliate of Seller; (ii) any assignment or transfer of this ESA by Seller to a Person succeeding to all or substantially all of the assets of Seller; or (iii) any assignment or transfer of this ESA by Seller to any Lender in connection with any financing or other financial arrangements and the transactions contemplated thereby; *provided,* that in the case of any assignment or transfer pursuant to clauses (i) or (ii) of this Section 19.1.1, such assignee (a) shall have agreed in writing to be bound by the terms and conditions hereof and furnished a copy of the assignment or transfer document to EPE; (b) with respect to an assignment or transfer described in clause (ii) above, is a Qualified Operator or retains, prior to the date of such transfer, a Qualified Operator to operate the Energy Storage Facility (or otherwise agrees not to interfere with the existing Qualified Operator for the Energy Storage Facility); and (c) shall have complied with the obligations of the assigning Party to provide Development Security or Delivery Term Security, as applicable, in accordance with Article 20.

19.1.2 Seller's consent shall not be required for any assignment of this ESA by EPE to any Affiliate of EPE; *provided*, that (a) EPE remains jointly and severally liable for all of EPE's obligations hereunder, (b) such assignee shall have agreed in writing to be bound by the terms and conditions hereof and furnished a copy of the assignment or transfer document to Seller, (c) such assignee delivers evidence reasonably satisfactory to Seller that such assignee's creditworthiness is equal to or better than that of EPE, and (d) such assignee delivers evidence reasonably satisfactory to Seller that such assignee will comply with NMPRC regulations and will resell the Product purchased under this ESA. Notwithstanding anything to the contrary herein, EPE may not assign this ESA to any Person that is an end user of electricity that would purchase Discharge Energy to offset its own electric retail service.

19.2 Conditions on Transfers

If the rights and interests of a Party in this ESA shall be sold, transferred or assigned as permitted in this Article 19, and the requirements set forth in this Article 19 are otherwise satisfied, then, except with respect to a sale, transfer, or assignment of EPE's interest in this ESA to an Affiliate pursuant to Section 19.1.2, the assigning Party shall be released and discharged from the terms and conditions hereof and each such obligation hereunder from and after such date, and non-assigning Party shall continue this ESA as if such Person had been named under this ESA; *provided*, *however*, that the assigning Party shall not be released and discharged from and shall remain liable for any and all obligations to the other Party arising or accruing hereunder prior to such assumption.

19.3 Change of Control

Except for a Seller Permitted Transfer, any Change of Control of Seller, whether voluntary or by operation of law, shall require the prior written consent of EPE, which shall not be unreasonably withheld, conditioned, or delayed.

19.4 Transfer Without Consent Is Null and Void

Any Change of Control or sale, transfer, or assignment of any interest in the Energy Storage Facility or in this ESA made without fulfilling the requirements of this ESA shall be null and void and shall constitute an Event of Default pursuant to Article 13.

19.5 Subcontracting

Seller may subcontract its duties or obligations under this ESA without the prior written consent of EPE; provided, that no such subcontract shall relieve Seller of any of its duties or obligations under this ESA. All subcontractors required by Applicable Law to be qualified to do business in the State of New Mexico shall be so qualified. Seller shall be solely responsible for the engagement, supervision, and management of any subcontractors.

19.6 Assignment to Lenders

19.6.1 Cooperation. In connection with any assignment of this ESA by Seller to its Lenders, as soon as reasonably practicable after reasonable request from Seller or any Lender, EPE will cooperate reasonably with Seller and Lender to agree upon and enter into a consent and agreement, or, if applicable, an estoppel certificate, an estoppel and consent agreement, or similar instrument, all in a form reasonably acceptable to EPE including exclusions, assumptions and caveats typical for such documents or necessary for the accuracy or delivery thereof, providing for, among other things, (i) an option, but not an obligation, for the Lenders to cure any monetary Event of Default of Seller within thirty (30) Days of the expiration of the cure period provided therefore in Section 13.1 (or if later, thirty (30) Days after delivery by EPE of notice to the Lenders), and cure any non-monetary Event of Default of Seller within sixty (60) Days of the

expiration of the cure period provided therefor in Section 13.1 (or if later, sixty (60) Days after delivery by EPE of notice to the Lender), prior to EPE terminating this ESA; (ii) EPE providing written notice to Lenders of any Events of Default of Seller; and (iii) EPE not terminating this ESA if Lenders need to foreclose on the Energy Storage Facility prior to curing any Event of Default of Seller giving rise to such termination, but only to the extent that the period required for such foreclosure and cure does not exceed one hundred eighty (180) Days from receipt by Lenders of written notice of such Event of Default; *provided*, that in all cases (a) EPE will have no obligation to alter or modify the terms of this ESA or provide any consent or enter into any agreement that has a material adverse effect on EPE, and (b) Seller will be responsible for EPE's reasonable costs (including, but not limited to, attorneys' fees) associated with EPE's review, negotiation, execution and delivery of any documents in connection with this Section 19.6.1. Nothing in this Section 19.6 shall impair EPE's right to receive all of the damages arising out of or relating to Seller's default, including damages accruing prior to termination as set forth in Section 13.3.

19.6.2 Financing Liens. Either Party may, without the other Party's consent, transfer, sell, pledge, encumber or assign this ESA or the revenues or proceeds therefrom in connection with any financing; *provided*, that such a collateral assignment by either Party does not place any limitation on the other Party's rights or expand the other Party's liability, risks or obligations under this ESA; and further; provided, that the assigning Party shall not be relieved of any of its obligations or liability under this ESA and that the Lender in any such collateral assignment acknowledges and agrees that the Energy Storage Facility shall be operated and maintained by a Qualified Operator. Promptly after making any such encumbrance, the assigning Party shall notify the other Party in writing of the name, address, and telephone and facsimile numbers of each Lender, collateral agent or trustee, as applicable, to which such Party's interest under this ESA has been encumbered. Such notice shall include the names of the account managers or other representatives of the Lenders to whom all written and telephonic communications may be addressed. After giving such initial notice, such Party shall promptly give the other Party notice of any change in the information provided in the initial notice or any revised notice.

ARTICLE 20 CREDIT AND SECURITY REQUIREMENTS

20.1 Security

20.1.1 Within thirty (30) Days after satisfaction or waiver by the Parties of the conditions precedent set forth in Section 6.1, and until Security is posted under Section 20.1.2, Seller shall post, at its sole cost and expense, security in an amount equal to the product of:

(a) One Hundred Thousand Dollars ($100,000) per MW multiplied by

(b) the Guaranteed ESS Capacity ("***Development Security***").

20.1.2 Not later than the earlier of (x) the Commercial Operation Date and (y) the Outside Commercial Operation Date, and as a condition thereto, unless this ESA is terminated earlier in accordance with its terms, until but not including the eleventh (11th) anniversary of the Commercial Operation Date, Seller shall post and maintain, at its sole cost and expense, security in an amount equal to:

(a) One Hundred Thousand Dollars ($100,000) per MW multiplied by

(b) the Guaranteed ESS Capacity (the "***Delivery Term Security***").

20.1.3 On and after the eleventh (11th) anniversary of the Commercial Operation Date, the Delivery Term Security shall be reduced to an amount equal to the product of:

(i) Sixty Five Thousand Dollars ($65,000) per MW multiplied by

(ii) the Guaranteed ESS Capacity.

20.1.4 Upon achievement of the Commercial Operation Date or promptly after EPE terminates this ESA as a result of Seller's failure to achieve Commercial Operation on or before the Outside Commercial Operation Date, EPE will return the Development Security to Seller, less any amounts drawn against the Development Security pursuant to Section 13.10. In the event that no amounts are due and owing by Seller to EPE under this ESA and provided no claims are then outstanding, the Delivery Term Security shall be released to Seller upon the earlier of (i) termination of this ESA in accordance with its terms; and (ii) expiration of the Term.

20.2 Form of Security

20.2.1 The following are deemed acceptable methods for posting Security, which methods may be used in any combination, in the reasonable discretion of EPE; *provided*, that Seller may, without EPE's prior approval, provide a Seller Guaranty from Seller Guarantor to satisfy any of Seller's obligations to post Security under this ESA:

(a) cash,

(b) a Letter of Credit in form reasonably acceptable to EPE issued by a U.S. bank or a U.S. branch of a foreign bank with credit ratings by either S&P or Moody's of at least A- and A3, respectively and at least Ten Billion Dollars ($10,000,000,000) in U.S.-based assets ("***Issuer Minimum Requirements***"),

(c) a Seller Guaranty from Seller Guarantor, or

(d) other security as may be reasonably acceptable to EPE.

20.2.2 If Security is provided in the form of a Seller Guaranty and at any time thereafter there shall occur a Downgrade Event with respect to Seller Guarantor, then EPE may require Seller

to post a Letter of Credit or cash in a pledged collateral account in an amount equal to the then-applicable amount of any outstanding Seller Guaranty comprising the Security. Upon receipt of the Letter of Credit or cash, the Seller Guaranty shall be returned promptly to Seller. Notwithstanding the foregoing, Seller's obligation to provide a Letter of Credit in lieu of a Seller Guaranty under this Section 20.2 shall be suspended during any period that (x) Seller Guarantor is no longer experiencing a Downgrade Event and (y) the Seller Guaranty is reinstated by Seller Guarantor in accordance with the requirements of this Section 20.2.

20.2.3 Any Letter of Credit provided hereunder shall be renewed by Seller for successive one-year or shorter periods. If EPE receives notice from the issuing bank that the Letter of Credit will not be extended, Seller must provide a substitute Letter of Credit from an alternative bank satisfying the Issuer Minimum Requirements or alternative acceptable Security. The receipt of the substitute Letter of Credit or other acceptable Security must be effective on or before the expiration date of the expiring Letter of Credit and delivered to EPE at least thirty (30) Days before the expiration date of the original Letter of Credit. If Seller fails to supply a substitute Letter of Credit or other acceptable Security as required, then EPE will have the right to draw on the total amount of the expiring Letter of Credit. If (a) the credit rating of the issuer bank of a Letter of Credit falls below the Issuer Minimum Requirements, (b) the issuer bank fails to honor a properly documented request to draw on such Letter of Credit or disaffirms, disclaims, repudiates or rejects, in whole or in part, or challenges the validity of, such Letter of Credit, or (c) the issuer of the outstanding Letter of Credit fails to comply with or perform its obligations under such Letter of Credit and such failure shall be continuing after the lapse of any applicable grace period permitted under such Letter of Credit, then Seller shall have thirty (30) Days (or such longer period as EPE in its sole discretion may permit in writing) following written notice from EPE to obtain a suitable Letter of Credit from another bank that meets the Issuer Minimum Requirements. EPE shall not be required to post security.

20.3 Grant of Security Interest

To the extent that Seller posts cash to secure its obligations under this ESA, Seller hereby grants to EPE a present and continuing security interest in, and lien on (and right of setoff against), and collateral assignment of, all cash collateral provided by Seller to EPE as collateral and any and all proceeds resulting therefrom or the liquidation thereof, whether now or hereafter held by, on behalf of, or for the benefit of EPE. Seller agrees to take such action as reasonably required to perfect in favor of EPE a first priority security interest in, and lien on (and right of setoff against), such collateral and any and all proceeds resulting therefrom or from the liquidation thereof.

20.4 Use of Security

In addition to any other remedy available to it, EPE in its sole discretion may draw from, offset against or make demand under such Security to recover any amounts owing to it arising out of this ESA, including any damages due to EPE and any amount for which EPE is entitled to indemnification under this ESA. EPE may draw from, offset against or make demand under all or

any part of the amounts due to it from any form of Security provided to EPE and from all such forms, in any sequence and at any time before or after termination of this ESA, as EPE may select until such time as the Security is exhausted.

ARTICLE 21 INDEMNITY; INSURANCE PROCEEDS

21.1 Indemnification

21.1.1 Subject to the provisions of Article 13, and to the fullest extent permitted by law, Seller shall defend, save harmless and indemnify EPE, its Affiliates, and their respective directors, officers, employees, agents, and subcontractors, from and against all third party claims, demands, losses, liabilities and expenses, including reasonable attorneys' fees, for personal injury, death or damage to real property and tangible personal property of any third party (collectively, "***Losses***") to the extent arising out of, resulting from, or caused by the negligence or willful misconduct of Seller, its Affiliates, directors, officers, employees, agents, or subcontractors; *provided,* that the waiver of consequential damages set forth in Section 13.7 shall not apply with respect to claims made by third parties.

21.1.2 Subject to the provisions of Article 13, and to the fullest extent permitted by law, EPE shall defend, save harmless and indemnify Seller, its Affiliates, and their respective directors, officers, employees, agents, and subcontractors, from and against all Losses to the extent arising out of, resulting from, or caused by the negligence or willful misconduct of EPE, its Affiliates, directors, officers, employees, agents, or subcontractors; *provided,* that the waiver of consequential damages set forth in Section 13.7 shall not apply with respect to claims made by third parties.

21.1.3 The indemnification obligations set forth in Sections 21.1.1 and 21.1.2 will apply notwithstanding any negligent or intentional acts, errors or omissions of the indemnitee but the indemnitor's liability to pay Losses to the indemnitee will be reduced in proportion to the percentage by which the indemnitee's negligent or intentional acts, errors or omissions caused the Losses. Neither Party may be indemnified for its Losses resulting from its sole negligence or willful misconduct.

21.2 Notice of Claims; Procedure

The indemnitee shall, with reasonable promptness after obtaining knowledge thereof, provide the indemnitor with written notice of the proceedings, claims, demands or assessments that may be subject to indemnification, which notice shall include a statement of the basis of the claim for indemnification, including a summary of the facts or circumstances that form the basis for the claim, a good faith estimate of the amount of Losses and copies of any pleadings or demands from the third party. Indemnitor shall have thirty (30) Days after its receipt of the claim notice to notify indemnitee in writing whether or not indemnitor agrees that the claim is subject to this Article 21 and, if so, whether indemnitor elects to undertake, conduct and control, through counsel

of its choosing acceptable to indemnitee and at indemnitor's sole risk and expense, the settlement or defense of the claim. If within thirty (30) Days after its receipt of the claim notice, indemnitor notifies indemnitee that it elects to undertake the settlement or defense of the claim, indemnitee shall cooperate with indemnitor in connection therewith including by making available to indemnitor all relevant information and the testimony of employees and agents material to the defense of the claim. Indemnitor shall reimburse indemnitee for reasonable out-of-pocket costs incurred in connection with such cooperation. So long as indemnitor is contesting the claim in good faith and with diligence, indemnitee shall not pay or settle the claim. Notwithstanding the foregoing, indemnitee shall have the right to pay or settle any claim at any time without the consent of indemnitor; *provided*, that in such event it waives any right to indemnification therefor. If indemnitor does not provide a responsive notice within the thirty (30) Day period set forth in this Section 21.2, or otherwise fails to assume or diligently prosecute the defense of any claim in accordance with this Section 21.2, the indemnitee shall have the absolute right to control the defense of such claim, and the fees and expenses of such defense, including reasonable attorneys' fees of the indemnitee's counsel and any amount determined to be owed by the indemnitee pursuant to such claim shall be borne by the indemnitor; *provided*, that the indemnitor shall be entitled, at its sole expense, to participate in (but not control) such defense. Subject to the foregoing, (a) the indemnitor shall control the settlement of all claims as required under the insurance policies set forth in Article 17, as applicable, as to which it has assured the defense; *provided*, *however*, *that* (i) such settlement shall include dismissal with prejudice of the claim and an explicit and unconditional release from all indemnitees; and (ii) the indemnitor shall not conclude any settlement without the prior approval of the indemnitee, which approval shall not be unreasonably withheld, conditioned or delayed; and (b) except as provided in the preceding sentence concerning the indemnitor's failure to assume or to diligently prosecute the defense of any claim, no indemnitee seeking reimbursement pursuant to the foregoing indemnity shall, without the prior written consent of the indemnitor, settle, compromise, consent to the entry of any judgment or otherwise seek to terminate any action, claim suit, investigation or proceeding for which indemnity is afforded hereunder unless the indemnitee waives any right to indemnification therefor or reasonably believes that the matter in question involves potential criminal liability.

21.3 Survival of Obligations

Cancellation, expiration, or earlier termination of this ESA shall not relieve the Parties of obligations that by their nature should survive such cancellation, expiration, or termination, prior to the term of the applicable statute of limitations, including each Party's indemnity obligations which shall survive for the period of the applicable statute(s) of limitation.

21.4 Insurance Proceeds

In the event that an indemnifying Party is obligated to indemnify the indemnified Party under this Article 21, the amount owing to the indemnified Party will be the amount of the indemnified Party's Loss net of any insurance proceeds received by the indemnified Party following a reasonable effort by such Party to obtain such insurance proceeds.

ARTICLE 22 ALLOCATION OF GOVERNMENTAL CHARGES

22.1 Governmental Charges

Seller shall pay or cause to be paid to the applicable Governmental Authority all Governmental Charges on or with respect to the Energy Storage Facility or on or with respect to the sale and making available Product to EPE that are imposed on the making available of Product arising prior to the Point of Delivery or prior to the transfer of the Environmental Attributes pursuant to Article 11. EPE shall pay or cause to be paid to the applicable Governmental Authority all Governmental Charges (other than any Governmental Charges for which Seller is liable under this Article 22) on or with respect to the taking and purchase by EPE of Product that are imposed at and from the taking of Product by EPE at the Point of Delivery or at and after the transfer of the Environmental Attributes pursuant to Article 11. If a Party is required under Applicable Law to remit or pay Governmental Charges that are the other Party's responsibility hereunder, such Party shall promptly reimburse the other for such Governmental Charges. Both Parties shall use reasonable efforts to administer this ESA and implement the provisions in accordance with their intent to minimize Governmental Charges, so long as no Party is materially adversely affected by such efforts. Nothing herein shall obligate or cause a Party to pay or be liable to pay any Governmental Charge for which it is exempt under Applicable Law. In the event any sale of Product hereunder is exempt from or not subject to any particular Governmental Charge, EPE shall provide Seller with all reasonably requested documentation within thirty (30) Days after requested by Seller to evidence such exemption or exclusion.

22.2 Compliance Actions

22.2.1 Notwithstanding any other provision of this ESA, to the extent a change in any Applicable Law occurs after the Execution Date which increases Seller's costs above the cost that could reasonably have been contemplated as of the Execution Date to take all actions ("***Compliance Actions***") to comply with Seller's obligations under this ESA, the Parties agree that (a) the maximum amount of costs and expenses Seller shall be required to incur in each calendar year during the Term in order to overcome the effects of such change in Applicable Law on Seller's ability to fulfill its obligations under this ESA ("***Seller Compliance Costs***") shall be capped at Ten Thousand Dollars ($10,000) per MW of Installed ESS Capacity, and (b) the maximum amount of Seller Compliance Costs Seller shall be required to incur over the Term shall be capped at Twenty Thousand Dollars ($20,000) per MW of Installed ESS Capacity ((a) and (b) individually and collectively, the "***Compliance Cost Cap***").

22.2.2 In the event that Seller anticipates the need to incur any Seller Compliance Costs in excess of the Compliance Cost Cap, Seller will notify EPE of such anticipated Seller Compliance Costs, with supporting information that reasonably demonstrates the nature and level of such costs. EPE will have sixty (60) Days from receipt of such notice to evaluate such notice, and will, by the end of such period, (a) agree to reimburse Seller for all such Seller Compliance

Costs that Seller actually incurs in excess of the Compliance Cost Cap ("***Agreed Compliance Costs***"), (b) agree and execute with Seller an amendment to this ESA which reflects a mutually agreed increase to the ESS Capacity Payment Rate for the remainder of the Term that would compensate Seller for all such excess Seller Compliance Costs, or (c) waive Seller's obligation to take any and all such actions. If EPE does not respond to a notice given by Seller under this Section 22.2.2 within sixty (60) Days after EPE's receipt of such notice, EPE shall be deemed to have waived its rights to require Seller to take the Compliance Actions that are the subject of the notice, and Seller shall have no further obligation to take, and no liability for any failure to take, these Compliance Actions for the remainder of the Delivery Term. In the event EPE agrees to reimburse Seller pursuant to clause (a) in the foregoing sentence, then Seller will take such actions for which EPE has agreed to reimburse Seller the Agreed Compliance Costs, and EPE will pay to Seller the Agreed Compliance Costs within ten (10) Business Days of receipt of invoice thereof issued by Seller. To the extent that EPE has not paid Seller for any Agreed Compliance Costs, Seller will not be in default under this ESA for failure to satisfy any obligation under this ESA, Applicable Law or other requirement related to such change in Applicable Law.

22.2.3 If (a) EPE agrees to reimburse Seller for the Agreed Compliance Costs, (b) the Parties execute an amendment to this ESA increasing the ESS Capacity Payment Rate, (c) EPE waives Seller's obligation to take Compliance Actions, or (d) EPE is deemed to have waived Seller's obligation to take such Compliance Actions in accordance with Section 22.2.2, then (i) Seller will be deemed not to be in breach or default of this ESA, and (ii) payments to Seller under this ESA shall not be reduced, and EPE shall continue to pay Seller as if such change in Applicable Law did not occur; *provided, however*, that if Energy Output (as defined in the PPA) from the Generating Facility is reduced or stopped as a result of Seller not taking Compliance Actions, EPE shall have no obligation to pay Seller for any quantities not generated and/or delivered to the Point of Delivery as a result of Seller not taking Compliance Actions; *provided, further,* that if EPE reasonably disputes whether Seller's anticipated Seller Compliance Costs exceed the Compliance Cost Cap, then EPE may submit such dispute to a mutually selected technical expert or arbitrator within thirty (30) days following EPE's receipt of Seller's notice, and the Parties shall in good faith resolve such dispute in compliance with the protocols employed by such mutually selected technical expert or arbitrator.

22.2.4 Notwithstanding anything to the contrary herein regarding the compliance cost obligations and liabilities of Seller set forth in Article 18 and Article 22, only such compliance costs and liabilities set forth in Article 18 and Article 22 shall be subject to the Compliance Cost Cap set forth in Section 22.2.1.

ARTICLE 23 INCORPORATION OF FEDERAL LAWS

23.1 EEO and Notice of Labor Rights

Seller and Seller's contractors and subcontractors, shall, to the extent applicable, abide by (i) the requirements of 41 CFR §§ 60-1.4(a), 60-4.3, 60-300.5(a), and 60-741.5(a), which prohibit discrimination against qualified individuals based on their status as protected veterans or individuals with disabilities, prohibit discrimination against all individuals based on their race, color, religion, sex, sexual orientation, gender identity, or national origin, and require affirmative action to employ and advance in employment individuals without regard to race, color, religion, sex, sexual orientation, gender identity, national origin, protected veteran status, or disability; (ii) 29 CFR Part 471, Appendix A to Subpart A; and (iii) E-Verify.

23.2 EEO Reporting

If Seller or any of Seller's contractors or subcontractors is required by federal regulations to file Employer Information Report EEO-1 (standard form 100) or Federal Contractor Veterans' Employment Report VETS-4212, Seller certifies that it has done so or cause such Person to do so or will file such reports or will cause such Person to file such reports in accordance with applicable instructions and will continue to file such reports unless or until no longer required by Applicable Law.

23.3 [Reserved]

23.4 Anti-Corruption Laws

The Parties to this ESA are committed to complying with Applicable Law. Accordingly, each Party hereto hereby represents, warrants and covenants that:

(a) In connection with the transactions contemplated by this ESA, neither such Party nor its Affiliates nor its or their respective officers or directors is, nor, to the knowledge of such Party, its employees or agents, has violated or is in violation of any provision of the Foreign Corrupt Practices Act or any applicable anti-corruption or anti-bribery law (collectively, "***Anti-Corruption Laws***");

(b) Such Party has recorded, and will continue to properly and accurately record, in its books and records, all of its business-related transactions in all material respects, and each document upon which entries in such Parties' books and records are based has been and is complete and accurate in all material respects;

(c) Such Party, its Affiliates and its and their respective officers and directors and, to the knowledge of such Party, its employees and agents, has been and is now in material compliance with the Applicable Laws required for its performance under this ESA

as well as Anti-Corruption Laws and will remain in material compliance with all such Applicable Laws during the Term;

(d) In connection with the transactions contemplated by this ESA, such Party, its Affiliates, and its and their respective officers and directors and, to the knowledge of such Party, its employees and agents, has not taken and will not take any actions in furtherance of an offer, payment, promise to pay, or authorization of the payment or giving of, or a request or acceptance of, money, or anything else of value, to any government official (including any officer or employee of a foreign government or government-controlled entity or of a public international organization, or any person acting in an official or representative capacity for or on behalf of any of the foregoing, or any political party or official thereof, or candidate for political office, or legislative, administrative or judicial officials whether or not elected or appointed, all of the foregoing being referred to as "***Government Officials***") or to any other Person while knowing, or having reason to know, that all or some portion of the money or value will be offered, given or promised to a Government Official for the purposes of obtaining or retaining business, obtaining an advantage in the conduct of business or securing any improper disadvantage in respect of another Person, in each case in violation of any applicable Anti-Corruption Law;

(e) In connection with the transactions contemplated by this ESA, such Party, its Affiliates and its and their respective officers and directors and, to the knowledge of such Party, its employees and agents, has not taken and will not take any actions in furtherance of an offer, payment, promise to pay or authorization of the payment or giving of, or a request or acceptance of, money or anything else of value, to or by any other Person (whether or not a Government Official) while knowing, or having reason to know, that all or some portion of the money or value offered, given or promised to such other Person is for the purpose of securing the improper performance of that Person's function or misuse of that Person's position, in each case in violation of any applicable Anti-Corruption Law; and

(f) No part of the payments received by a Party under this ESA, directly or indirectly, from the other Party will be used for any purpose which would cause a violation of the laws of the United States or any other applicable jurisdiction including any applicable Anti-Corruption Laws.

Either Party may terminate this ESA in accordance with Section 13.1.4(b) in the event that the other Party materially breaches any representation or warranty set forth in this Section 23.4.

ARTICLE 24 CONFIDENTIALITY

24.1 Definition of Confidential Information

Except as otherwise set forth in this Section 24.1, the following constitutes "***Confidential Information***," whether oral or written which is delivered by Seller to EPE or by EPE to Seller including:

(a) all oral, written, or visual information (including any combination thereof) communicated, transmitted, or otherwise disclosed by the disclosing Party (the "***Disclosing Party***"), its officers, employees, and/or agents (acting in such capacity) to the receiving Party (the "***Receiving Party***"), its employees and/or agents in connection with this ESA,

(b) the existence and terms of this ESA and all data, reports, records, agenda, compilations, analyses, test results, photographs, drawings, blueprints, schematics, computer files, and screens, and all software licenses, software services agreements, and software development agreements, and all software programs and documentation licensed by the Disclosing Party and written and/or oral descriptions of the functionality of such programs, and

(c) non-public information of EPE that under Applicable Law is designed to protect the electrical grid of the United States and the cyber systems related to EPE's role as a public utility service provider and owner and operator of grid assets, including

(1) all information pertaining to systems defined as "cyber assets" and "bulk electric system (BES) cyber systems" under the Critical Infrastructure Protection (CIP) Standards or other standards promulgated by the North American Electric Reliability Corporation (NERC), together with all security measures to protect such critical cyber assets and systems,

(2) all "BES cyber security information" (BCSI) pertaining to any "BES cyber system" as such terms are defined in the CIP Standards or other standards promulgated by NERC, and

(3) all "critical energy/electric infrastructure information" (CEII) and other information concerning "critical infrastructure" as such terms are defined by the Federal Energy Regulatory Commission pursuant to 18 C.F.R. § 388.113(c) as may be amended or re-codified.

Confidential Information does not include (i) information that was publicly available at the time of the disclosure, other than as a result of a disclosure in breach of this ESA; (ii) information that becomes publicly available through no fault of the recipient after the time of the delivery; (iii) information that was rightfully in the possession of the recipient (without confidential or proprietary restriction) at the time of delivery or that becomes available to the recipient from a source not subject to any restriction against disclosing such information to the recipient; (iv) information that the recipient independently developed without a violation of this ESA; (v) information that was previously known by the recipient without any obligation to hold it in confidence; and (vi) information that the providing Party approves for release to the general public in writing.

24.2 Duty to Maintain Confidentiality

24.2.1 Confidential Information will retain its character as Confidential Information but may be disclosed by the Receiving Party if and to the extent such disclosure is required (a) to be made by any requirements of Applicable Law, (b) pursuant to an order of a court, or (c) in order to enforce this ESA. If the Receiving Party becomes legally compelled (by interrogatories, data requests, requests for information or documents, subpoenas, summons, civil investigative demands, or similar processes or otherwise in connection with any litigation or to comply with any Applicable Law, order, regulation, ruling, regulatory request, accounting disclosure rule or standard or any request by or rule of any Governmental Authority (including any applicable RTO or ISO), exchange, or control area) to disclose any Confidential Information of the Disclosing Party, the Receiving Party shall provide Disclosing Party with prompt notice so that the Disclosing Party, at its sole expense, may seek an appropriate protective order or other appropriate remedy. If the Disclosing Party takes no such action after receiving the foregoing notice from the Receiving Party, the Receiving Party is not required to defend against such request and shall be permitted to disclose such Confidential Information of the Disclosing Party, with no liability for any damages that arise from such disclosure. Notwithstanding anything to the contrary in this ESA, EPE shall be entitled to disclose to any Governmental Authority as a matter of right, without seeking any confidential treatment therefor, Seller's name, the Delivery Term, the type, nature, and a general description of the transaction, and amount and type of capacity under contract pursuant to this ESA. Notwithstanding the foregoing, Seller acknowledges and agrees that EPE may disclose this ESA and related documents, without seeking a protective order or similar process, in any proceeding before the NMPRC or pursuant to any other regulatory process under NMPRC jurisdiction; *provided*, that the ESS Capacity Payment Rate shall be redacted to the extent allowed by Applicable Law.

24.2.2 Subject to the remainder of this Article 24, the Receiving Party shall use its best efforts and shall take all reasonable steps necessary to ensure that Confidential Information is not disclosed, communicated, or transmitted to any Person other than (a) the Receiving Party's parents, Affiliates, counsel, contractors, directors, officers, employees, advisors, or agents (acting in such capacity) and (b) in the case of Seller, any purchasers, potential purchasers, bidders, and potential bidders of direct or indirect interests in the Energy Storage Facility (including direct or indirect interests in the equity interests of Seller) (collectively "***Receiving Party Representatives***") who have a need to review or know such Confidential Information and who are informed of the confidential nature of the Confidential Information and agree in writing to be bound by the terms of this Article 24. Provided that Confidential Information is not disclosed by, or on behalf of, the Receiving Party to a (i) J.P. Morgan Chase & Co. (together with its affiliates, "***J.P. Morgan***") business group other than J.P. Morgan Asset Management's Alternatives-Infrastructure Investments Group, no such other business group(s) shall be deemed to be a recipient of Confidential Information, and (ii) fund, investment vehicle, or separate account that is sponsored, advised, and/or managed by J.P. Morgan Investment Management Inc. and/or its affiliates, no such fund, investment vehicle, or separate account shall be deemed to be a recipient of Confidential

Information. The Receiving Party shall be responsible for any breach of this Article 24 by the Receiving Party or Receiving Party Representatives.

24.3 Irreparable Injury; Remedies

The Receiving Party acknowledges that its obligations under this ESA are necessary and reasonable in order to protect the Disclosing Party and the business of the Disclosing Party, and expressly acknowledges that monetary damages would be inadequate to compensate the Disclosing Party for any breach or threatened breach by the Receiving Party of any covenants and agreements set forth in this Article 24. Accordingly, the Receiving Party acknowledges that any such breach or threatened breach will cause irreparable injury to the Disclosing Party and that, in addition to any other remedies that may be available, in law, in equity or otherwise, the Disclosing Party will be entitled to obtain injunctive relief against the threatened breach of this Article 24 or the continuation of any such breach, without the necessity of proving actual damages.

24.4 Disclosure by Seller to Lenders, Etc.

Notwithstanding anything to the contrary in this Article 24, Confidential Information may be disclosed by Seller to any actual or potential Lender or investor or any of their Affiliates, and Seller's actual or potential agents, consultants, contractors, or trustees, so long as the Person to whom Confidential Information is disclosed agrees in writing to be bound by the confidentiality provisions of this Article 24 to the same extent as if it were a Party.

24.5 Disclosure by EPE to Examiners, Etc.

Notwithstanding anything to the contrary in this Article 24, Confidential Information may be disclosed by EPE to a bank examiner, regulatory examiner, or self-regulatory examiner in the course of such examiner's examination, inspection, or audit that is not focused on EPE, Seller, or this ESA.

ARTICLE 25 MISCELLANEOUS

25.1 Waiver

Subject to the provisions of Section 14.8, the failure of either Party to enforce or insist upon compliance with or strict performance of any of the terms or conditions of this ESA, or to take advantage of any of its rights thereunder, shall not constitute a waiver or relinquishment of any such terms, conditions, or rights, but the same shall be and remain at all times in full force and effect.

25.2 Fines and Penalties

Seller shall pay when due all fees, fines, penalties or costs incurred by Seller or its agents, employees or contractors for noncompliance by Seller, its employees, or subcontractors with any provision of this ESA, or any contractual obligation, permit or requirements of law except for such fines, penalties and costs that are being actively contested in good faith and with due diligence by Seller and for which adequate financial reserves have been set aside to pay such fines, penalties or costs in the event of an adverse determination. EPE shall pay when due all fees, fines, penalties or costs incurred by EPE or its agents, employees or contractors for noncompliance by EPE, its employees, or subcontractors with any provision of this ESA, or any contractual obligation, permit or requirements of law except for such fines, penalties and costs that are being actively contested in good faith and with due diligence by EPE.

25.3 Rate Changes

25.3.1 The terms and conditions and the rates for service specified in this ESA shall remain in effect for the term of the transaction described herein. Absent the Parties' written agreement, this ESA shall not be subject to change by application of either Party pursuant to Section 205 or 206 of the Federal Power Act.

25.3.2 Absent the agreement of all Parties to the proposed change, the standard of review for changes to this ESA whether proposed by a Party, a non-party, or the Federal Energy Regulatory Commission acting sua sponte shall be the "public interest" standard of review set forth in *United Gas Pipe Line v. Mobile Gas Service Corp.*, 350 U.S. 332 (1956) and *Federal Power Commission v. Sierra Pacific Power Co.*, 350 U.S. 348 (1956).

25.4 Disclaimer of Certain Third Party Beneficiary Rights

In executing this ESA, EPE does not, nor should it be construed to, extend its credit or financial support for the benefit of any third parties lending money to or having other transactions with Seller. Nothing in this ESA shall be construed to create any duty to, or standard of care with reference to, or any liability to, any Person not a party to this ESA.

25.5 Relationship of the Parties

25.5.1 This ESA shall not be interpreted to create an association, joint venture, or partnership between the Parties nor to impose any partnership obligation or liability upon either Party. Neither Party shall have any right, power, or authority to enter into any agreement or undertaking for, or act on behalf of, or to act as an agent or representative of, the other Party.

25.5.2 Seller shall be solely liable for the payment of all wages, Taxes, and other costs related to the employment of Persons to perform services for Seller, including all federal, state, and local income, social security, payroll, and employment taxes and statutorily mandated workers' compensation coverage. None of the Persons employed by Seller shall be considered

employees of EPE for any purpose; nor shall Seller represent to any Person that he or she is or shall become an EPE employee.

25.6 Equal Employment Opportunity Compliance Certification

Seller acknowledges that, as a government contractor, EPE is subject to various federal laws, executive orders, and regulations regarding equal employment opportunity and affirmative action. These laws may also be applicable to Seller as a subcontractor to EPE. To the extent such laws are applicable to Seller, all applicable equal opportunity and affirmative action clauses shall be deemed to be incorporated herein as required by federal laws, executive orders, and regulations, including 41 C.F.R. § 60-1.4(a)(1)-(7).

25.7 Survival of Obligations

Cancellation, expiration, or earlier termination of this ESA shall not relieve the Parties of obligations that by their nature should survive such cancellation, expiration, or termination, prior to the term of the applicable statute of limitations, including warranties, and remedies which obligation shall survive for the period of the applicable statute(s) of limitation.

25.8 Severability

In the event any of the terms, covenants, or conditions of this ESA, its Exhibits or Schedules, or the application of any such terms, covenants, or conditions, shall be held invalid, illegal, or unenforceable by any court or administrative body having jurisdiction, all other terms, covenants, and conditions of this ESA and their application not adversely affected thereby shall remain in force and effect; *provided*, *however*, that EPE and Seller shall negotiate in good faith to attempt to implement an equitable adjustment in the provisions of this ESA with a view toward effecting the purposes of this ESA by replacing the provision that is held invalid, illegal, or unenforceable with a valid provision the economic effect of which comes as close as possible to that of the provision that has been found to be invalid, illegal or unenforceable.

25.9 Service Contract

The Parties intend this ESA to be a "service contract" within the meaning of Section 7701(e)(3) of the Code.

25.10 Complete Agreement; Amendments

The terms and provisions contained in this ESA constitute the entire agreement between EPE and Seller with respect to the Energy Storage Facility and shall supersede all previous communications, representations, or agreements, either oral or written, between EPE and Seller with respect to the sale of Product from the Energy Storage Facility. Subject to approval by any Governmental Authority with jurisdiction over this ESA, this ESA may be amended, changed, modified, or altered; *provided*, that such amendment, change, modification, or alteration shall be

in writing and signed by both Parties hereto, and *provided*, further, that the Exhibits and Schedules attached hereto may be changed according to the provisions of Section 14.7.

25.11 Binding Effect

This ESA, as it may be amended from time to time pursuant to Section 25.10, shall be binding upon and inure to the benefit of the Parties hereto and their respective successors-in-interest, legal representatives, and assigns permitted hereunder.

25.12 Headings

Captions and headings used in this ESA are for ease of reference only and do not constitute a part of this ESA.

25.13 Counterparts

This ESA or any supplement, modification, amendment or restatement hereof may be executed in two or more counterpart copies of the entire document or of signature pages to the document, each of which may have been executed by one or more of the signatories hereto and thereto and deliveries by mail, courier, telecopy or other electronic means, but all of which taken together shall constitute a single agreement, and each executed counterpart shall have the same force and effect as an original instrument.

25.14 Governing Law

The interpretation and performance of this ESA and each of its provisions shall be governed and construed in accordance with the laws of the State of Texas, notwithstanding its conflict of laws rules or any principles that would trigger the application of any other law. All disputes arising out of or related to this ESA shall be brought in the state or federal courts located in El Paso, Texas.

25.15 Press Releases and Media Contact

Upon the request of either Party, the Parties shall develop a mutually agreed joint press release to be issued describing the location, size, type and timing of the Energy Storage Facility, the long-term nature of this ESA, and other relevant factual information about the relationship between the Parties. In the event that, during the Term, either Party is contacted by a representative from any media outlet concerning this ESA, the contacted Party shall inform the other Party of the existence of the inquiry, and the Parties shall jointly agree upon the substance of any information to be provided to such media outlet.

25.16 Forward Contract Merchants

Notwithstanding any other provision of this ESA, the Parties acknowledge and agree that Seller and EPE are "forward contract merchants" and all payments under this ESA are "transfers" or "settlement payments", in each case within the meaning of the Bankruptcy Code. Accordingly, the Parties are entitled to the rights under, and the protections afforded by, Sections 362, 546, 556, 560, and 561 of the Bankruptcy Code.

25.17 Accounting Matters

The Parties agree that Generally Accepted Accounting Principles in the United States of America ("***GAAP***") and the rules of the United States Securities and Exchange Commission ("***SEC***") require EPE to evaluate if EPE must consolidate Seller's financial information. The Parties shall determine, through consultation with their respective independent registered public accounting firms, whether this ESA (i) will be considered a lease under Accounting Standards Codification 842 - Leases, or (ii) require consolidation of Seller's financial information with EPE's financial statements pursuant to Accounting Standards Codification 810 - Consolidation (including any subsequent amendments to these sections or future guidance issued by accounting profession governance bodies or SEC that affects EPE's accounting treatment for this ESA, jointly the "***Accounting Standards***"). Seller agrees to provide EPE with information EPE reasonably believes is necessary for EPE to make the foregoing determinations. If, as a result of the Parties' review (or subsequent reviews as EPE deems necessary), and consultations with their respective independent registered public accounting firms, EPE, in its reasonable discretion, determines that such consolidation is required for a given period, then the Parties agree to the following provisions for such period:

(a) Within fifteen (15) Days following the end of each calendar quarter, including the fourth quarter of the calendar year, Seller shall deliver to EPE: (i) an unaudited year-to-date statement of income, (ii) an unaudited year-to-date statement of cash flows, (iii) an unaudited balance sheet as of the end of such calendar quarter, and (iv) related supporting schedules that are prepared by the Seller's Guarantor, or if Seller has not provided a Seller Guaranty to satisfy its Security requirements pursuant to Article 20, then Seller, in order to allow the Seller's parent to complete its quarterly filings with the SEC, shall deliver to EPE any other information reasonably requested by EPE to comply with the consolidation requirements of GAAP. If audited financial statements are deemed necessary by EPEs external auditors to complete an audit of EPE's consolidated financial statements, EPE agrees to provide notice to Seller no later than sixty (60) Days before the end of the calendar year, and Seller agrees to provide audited financial statements within forty-five (45) Days of each calendar year end thereafter.

(b) The financial statements to be delivered by Seller in accordance with Section 25.17(a) ("***Seller's Financial Statements***") shall be prepared in accordance with GAAP and fairly present in all material respects the consolidated financial position, results of operations, and cash flows of Seller Guarantor, or Seller, as applicable. Seller shall

maintain a system of internal accounting controls sufficient to provide reasonable assurance that the financial statements of Seller or Seller Guarantor, as applicable, are prepared in conformity with GAAP. If audited financial statements are prepared for the Seller, other than to satisfy the requirements for financial statements set forth in Section 25.17(a), Seller shall provide such statements to EPE within five (5) Business Days after those statements are issued.

(c) Upon reasonable notice from EPE, during normal business hours and mutually agreed terms and dates, Seller shall allow EPE access to Seller's records and personnel, so that EPE and EPE's independent registered public accounting firm can conduct financial statement reviews and audits in accordance with the standards of the Public Company Accounting Oversight Board (United States). All reasonable expenses for the foregoing that are incremental to Seller's normal operating expenses shall be borne by EPE.

(d) Once during each calendar quarter, EPE and Seller shall meet (either in person or by conference call) at a mutually agreed upon date and time to conduct due diligence and Form 8-K disclosure review and discuss Seller's internal control over financial reporting.

(e) EPE shall treat Seller's Financial Statements or other financial information provided under the terms of this Section 25.17 in confidence in accordance with Article 24 and, accordingly, shall: (i) utilize such Seller financial information only for purposes of preparing, reviewing, auditing or certifying EPE's or any Affiliate's financial statements (including any required disclosures in the financial statement presentation and notes), for making regulatory, tax or other filings required by Applicable Law in which EPE is required to demonstrate or certify its or any Affiliate's financial condition or to obtain credit ratings; (ii) make such Seller financial information available only to its or its Affiliates' officers, directors, employees or auditors who are responsible for preparing, reviewing, auditing or certifying EPE's or any Affiliate's financial statements, to the SEC and the Public Company Accounting Oversight Board (United States) in connection with any oversight of EPE's or any Affiliate's financial statements and to those Persons who are entitled to receive Confidential Information in accordance with Article 24; (iii) not disclose any of Seller's financial information provided under the terms of this Section 25.17 to the extent that such information is not required by the Accounting Standards or Applicable Law; (iv) limit submission of Seller's financial information provided under the terms of this Section 25.17 to that information that reflects Seller's operations of the Energy Storage Facility, provided such limited submission is not contrary to the Accounting Standards or other Applicable Law; and (v) use reasonable efforts to disclose to and consult with Seller with respect to any information respecting Seller or the Energy Storage Facility that EPE intends to submit pursuant to this Section 25.17 and use good faith efforts to incorporate any of Seller's comments thereto in any such submission. Notwithstanding the foregoing, if EPE discloses information, based on the advice of its counsel that it is legally required to be disclosed, EPE may make such disclosure without being in violation of this Section 25.17.

25.18 Telephone Recording

Each Party acknowledges and agrees to the taping or electronic recording ("***Recording***") of conversations between the Parties with respect to all scheduling and dispatch issues, whether by one or the other or both Parties, and that the Recordings will be retained in confidence, secured from improper access, and may be submitted in evidence in any suit, action or proceedings relating to this ESA. Each Party waives any further notice of that monitoring or Recording and agrees to notify its personnel of the monitoring or Recording and to obtain any necessary consent of those personnel. In the event of a dispute between the Parties, each Party with a Recording relating to such dispute shall provide a copy of such Recording to the other Party upon request.

[***Signature page(s) follow***]

IN WITNESS WHEREOF, the Parties have caused this ESA to be duly executed as of the Execution Date. This ESA shall not become effective as to either Party unless and until executed by both Parties.

EPE:

El Paso Electric Company,
a Texas corporation

Kelly Tomblin

President and Chief Executive Officer

Seller:

Santa Teresa Storage, LLC,
a Delaware limited liability company

Name: Hy Martin

Title: Authorized Signatory

EXHIBIT A
(to Energy Storage Agreement)

DESCRIPTION OF ENERGY STORAGE FACILITY AND SITE MAP

1. **Name of Seller's Energy Storage Facility:** Santa Teresa Energy Storage Project

   Location: 31°48'44.11"N, 106°41'14.66"W

2. **Owner:** Santa Teresa Storage, LLC

3. **Operator:** Santa Teresa Storage, LLC

4. **Equipment/Fuel:**

   a. **Type of facility and conversion equipment (e.g., Solar PV; Solar Thermal; Wind; Energy Storage; Biomass (including Fuel)):** Energy Storage

   b. **Total nameplate capacity (AC):** 150 MW

   c. **Total capacity at Point of Delivery:** 150 MW

   d. **Additional technology-specific information:** AC-connected battery energy storage system

5. **Site Map:** A scaled map that complies with the requirements of Section 3.3 of the ESA is attached.

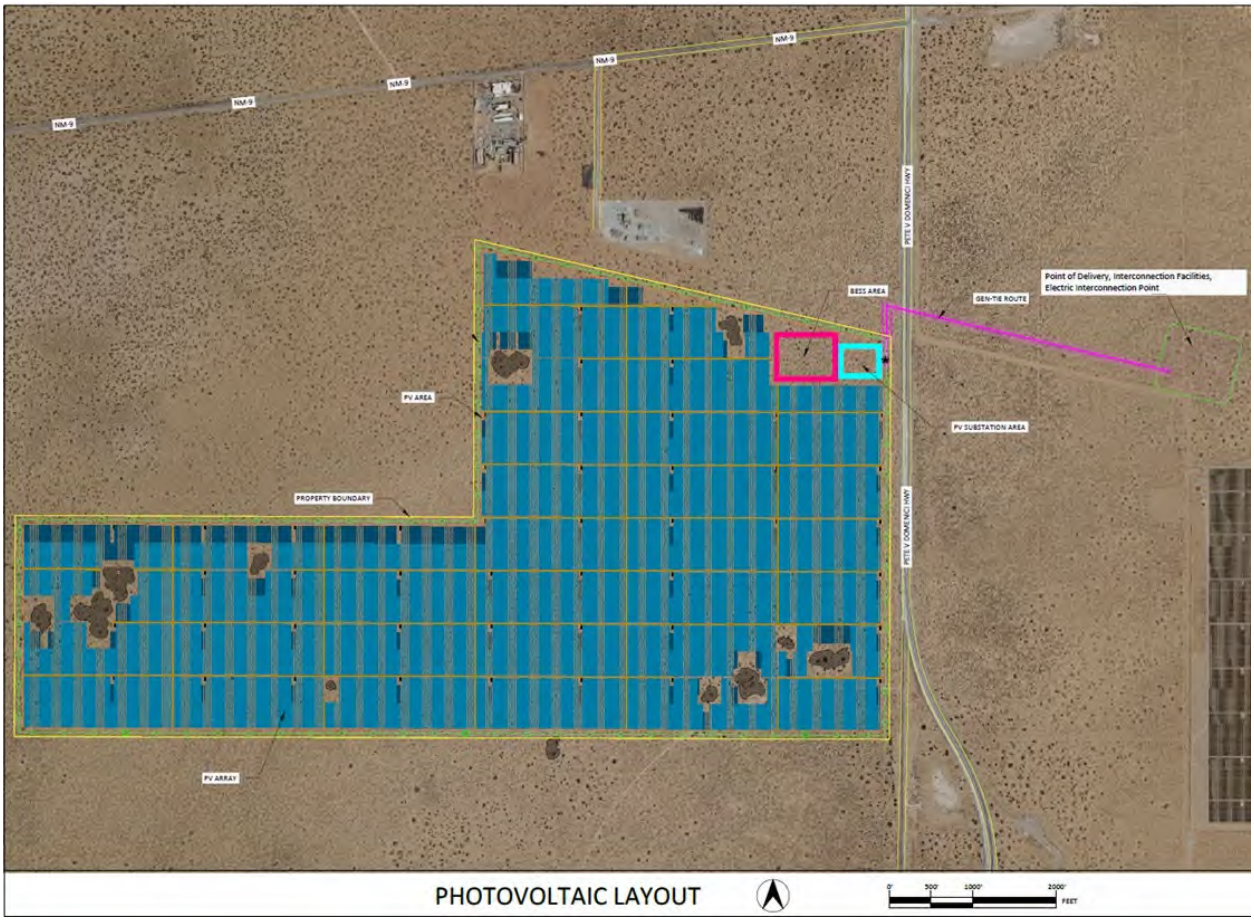
NM-9
NM-9
NM-9
NM-9
NM-9
PETLY DOMINGUEZ HWY
BESS AREA
GEN-TIE ROUTE
Point of Delivery, Interconnection Facilities, Electric Interconnection Point
PV AREA
PV SUBSTATION AREA
PROPERTY BOUNDARY
PETLY DOMINGUEZ HWY
PV ARRAY
PHOTOVOLTAIC LAYOUT
0'
500'
1000'
2000'
FEET

EXHIBIT B
(to Energy Storage Agreement)

ONE-LINE DIAGRAM OF ENERGY STORAGE FACILITY AND INTERCONNECTION FACILITIES

See below one-line diagram of the Energy Storage Facility, which indicates the Interconnection Facilities, the network upgrades, the Point of Delivery, and ownership and location of meters.

The Point of Delivery is the busbar of the 115 kv Verde substation.

Seller shall provide any necessary updates upon execution of a Grid Charging Interconnection Agreement.

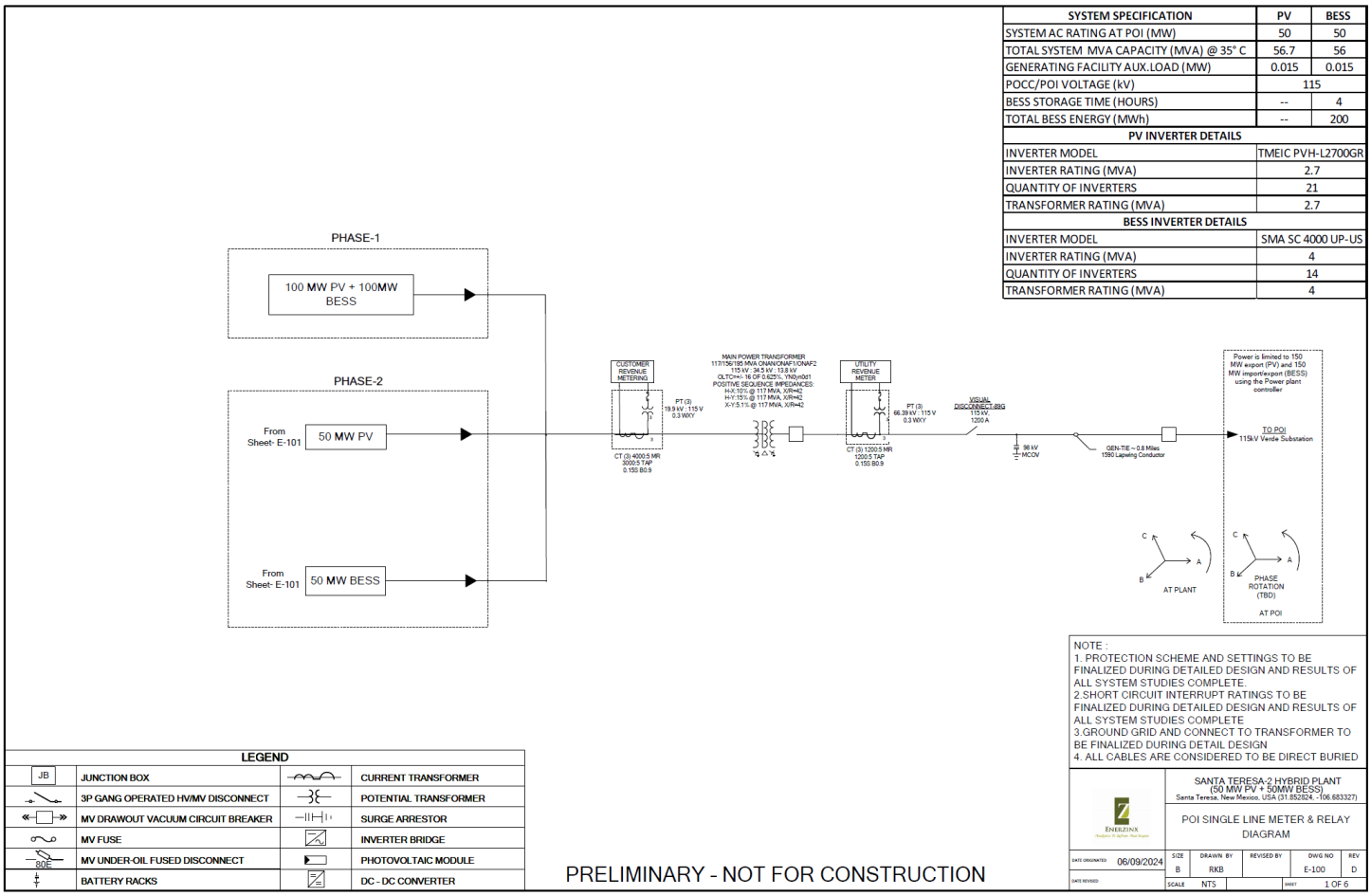

SYSTEM SPECIFICATION	PV	BESS
SYSTEM AC RATING AT POI (MW)	50	50
TOTAL SYSTEM MVA CAPACITY (MVA) @ 35° C	56.7	56
GENERATING FACILITY AUX.LOAD (MW)	0.015	0.015
POCC/POI VOLTAGE (kV)	115	
BESS STORAGE TIME (HOURS)	--	4
TOTAL BESS ENERGY (MWh)	--	200
PV INVERTER DETAILS		
INVERTER MODEL	TMEIC PVH-L2700GR	
INVERTER RATING (MVA)	2.7	
QUANTITY OF INVERTERS	21	
TRANSFORMER RATING (MVA)	2.7	
BESS INVERTER DETAILS		
INVERTER MODEL	SMA SC 4000 UP-US	
INVERTER RATING (MVA)	4	
QUANTITY OF INVERTERS	14	
TRANSFORMER RATING (MVA)	4	

EXHIBIT C
(to Energy Storage Agreement)

DESCRIPTION OF SITE

The Energy Storage Facility will be located in Doña Ana County, New Mexico on privately held land approximately 12 miles northwest of El Paso, Texas. The Site coordinates are 31°48'44.11"N, 106°41'14.66"W.

The legal property description is:

The project will utilize a portion of the 950 acres located in Doña Ana County, New Mexico, more specifically described as:

PARCEL A

A CERTAIN PARCEL OF LAND SITUATE WITHIN PORTIONS OF SECTIONS 10 & 11, TOWNSHIP 29 SOUTH, RANGE 2 EAST, N.M.P.M., DONA ANA COUNTY, NEW MEXICO, AND BEING MORE PARTICULARLY DESCRIBED BY METES ANO BOUNDS AS FOLLOWS: BEGINNING AT THE NORTHEAST CORNER OF THE PARCEL HEREIN DESCRIBED, AT A U.S.G.L.0. BRASS CAP FOUND AT THE SECTION CORNER COMMON TO SECTIONS 1, 2, 11 & 12, TOWNSHIP 29 SOUTH, RANGE 2 EAST, N,M.P,M., WHENCE A U,S.GLO. BRASS CAP FOUND AT THE QUARTER CORNER COMMON TO SECTIONS 1 & 2, TOWNSHIP 29 SOUTH, RANGE 2 EAST, N.M.P.M. BEARS, N 00° 15' 11" E, A DISTANCE OF 2641.11 FEET; THENCE, FROM THE POINT OF BEGINNING AND CONTINUING ALONG THE SECTION LINE COMMON TO SECTIONS 11 & 12, S 00° 17' 15" WA DISTANCE OF 2639.37 FEET TO A FOUND #5 REBAR WITH CAP STAMPED "NMPE LS 5948" AND A U.S.G.L.0, BRASS CAP (BENT, NOT HONORED) AT THE QUARTER CORNER COMMON TO SECTIONS 11 & 12, TOWNSHIP 29 SOUTH, RANGE 2 EAST, N.M.P.M.;

THENCE, N 39° 49' 48" W A DISTANCE OF 2639.77 FEET TO A SET #5 REBAR WITH CAP STAMPED "NMPS 15075" ON THE CENTER QUARTER CORNER OF SECTION 11, TOWNSHIP 29 SOUTH, RANGE 2 EAST, N.M.P.M.;

THENCE, CONTINUING ALONG THE MID-SECTION LINE OF SECTION 11, N 89° 48' 47" W A DISTANCE OF 2639.76 FEET TO A U.S.G.L.0. BRASS CAP FOUND AT THE QUARTER CORNER COMMON TO SECTIONS 10 & 11, TOWNSHIP 29 SOUTH, RANGE 2 EAST, N.M.P.M.;

THENCE, ALONG THE MID-SECTION LINE OF SECTION 10, N 89° 57' 08" W A DISTANCE OF 205.47 FEET TO A FOUND #5 REBAR WITH CAP STAMPED "NMPE LS 5948" SET AT THE SOUTHWEST CORNER OF THE PARCEL HEREIN DESCRIBED;

THENCE, LEAVING THE MIO-SECTION LINE OF SECTION 10, N 00° 16' 50" EA DISTANCE OF 2642.45 FEET TO 5/8" REBAR WITH CAP STAMPED "NMPE LS 5948" SET ON THE SECTION LINE COMMON TO SECTIONS 3 & 10 TOWNSHIP 29 SOUTH, RANGE 2 EAST, N.M.P.M.;

THENCE, ALONG THE SECTION LINE COMMON TO SECTIONS 3 & 10, S 89° 58' 17" EA DISTANCE OF 205.77 FEET TO A U.S.G.L.0. BRASS CAP AT THE SECTION CORNER COMMON TO SECTIONS 2, 3, 10 & 11, TOWNSHIP 29 SOUTH, RANGE 2 EAST, N.M.P.M.;

THENCE, CONTINUING ALONG THE SECTION LINE COMMON TO SECTIONS 2 & 11, S 89° 48' 47" E A DISTANCE OF 2639.76 FEET TO A FOUND #5 REBAR WITH CAP STAMPED "NMPE LS 5948" AND A U.S.GLO. BRASS CAP (BENT, NOT HONORED) AT THE QUARTER CORNER COMMON TO SECTIONS 2 & 11, TOWNSHIP 29 SOUTH, RANGE 2 EAST, N.M,P.M.;

THENCE, CONTINUING ALONG THE SECTION LINE COMMON TO SECTIONS 2 & 11, S 89° 45' 19" E A DISTANCE OF 2639.79 FEET TO THE POINT OF BEGINNING OF THE PARCEL HEREIN DESCRIBED, SAID PARCEL CONTAINING 14,489,290 SQUARE FEET OR 332.6383 ACRES OF LAND, MORE OR LESS.

PARCEL B

A CERTAIN PARCEL OF LAND SITUATE WITHIN PORTIONS OF SECTIONS 1 & 12, TOWNSHIP 29 SOUTH, RANGE 2 EAST, NEW MEXICO PRINCIPAL MERIDIAN, DONA ANA COUNTY, NEW MEXICO, AND BEING MORE PARTICULARLY DESCRIBED BY METES AND BOUNDS AS FOLLOWS:

BEGINNING AT A FOUND #5 REBAR WITH CAP STAMPED "NMPE LS 5948" AT THE NORTHEAST CORNER OF THE PARCEL HEREIN DESCRIBED, WHENCE A U.S.GLO. BRASS CAP FOUND AT THE QUARTER CORNER COMMON TO SECTION 1 TOWNSHIP 29 SOUTH, RANGE 2 EAST, AND SECTION 6 TOWNSHIP 29 SOUTH, RANGE 3 EAST, NEW MEXICO PRINCIPAL MERIDIAN, BEARS N 33° 00' 50" E, A DISTANCE OF 554,03 FEET;

THENCE, FROM THE POINT OF BEGINNING S 00° 14' 17" W A DISTANCE OF 1975.68 FEET TO A FOUND #5 REBAR WITH CAP STAMPED "NMPE LS 5948" SET AT AN ANGLE POINT OF THE PARCEL HEREIN DESCRIBED;

THENCE, S 00° 07' 31" W A DISTANCE OF 200.24 FEET TO A FOUND #5 REBAR WITH CAP STAMPED "NMPE LS 5948" ON THE SECTION LINE COMMON TO SECTIONS 1 AND 12, TOWNSHIP 29 SOUTH, RANGE 2 EAST, N.M.P.M.;

THENCE, S 00° 10· 47" W A DISTANCE OF 1099.88 FEET TO A FOUND #5 REBAR WITH CAP STAMPED "NMPE LS 5948" AT AN ANGLE POINT OF THE PARCEL HEREIN DESCRIBED;

THENCE, S 00° 16' 31" WA DISTANCE OF 1540.46 FEET TO S FOUND #5 REBAR WITH CAP STAMPED "NMPE LS 5948" AT THE SOUTHEAST CORNER OF THE PARCEL HEREIN DESCRIBED, ALSO BEING A POINT ON THE EAST-WEST MIDSECTION LINE OF SECTION 12;

THENCE, ALONG THE EAST-WEST MIDSECTION LINE OF SECTION 12, N 89° 47' 52" W A DISTANCE OF 2346.29 FEET TO A FOUND #5 REBAR WITH CAP STAMPED "NMPE LS 5948" AT THE CENTER QUARTER CORNER OF THE PARCEL HEREIN DESCRIBED;

THENCE, CONTINUING ALONG THE EAST-WEST MIDSECTION LINE OF SECTION 12, N 89° 47' 50" W A DISTANCE OF 2646.68 FEET TO A FOUND #5 REBAR WITH CAP STAMPED "NMPE LS 5948" AND A U.S.G.L.0. BRASS CAP (BENT, NOT HONORED) AT THE QUARTER CORNER COMMON TO SECTIONS 11 & 12, TOWNSHIP 29 SOUTH, RANGE 2 EAST, N.M.P.M.;

THENCE, ALONG THE SECTION LINE COMMON TO SECTIONS 11 & 12, N 00° 17' 15" EA DISTANCE OF 2639.37 FEET TO A FOUND U,S.G.L.O. BRASS CAP FOUND AT THE SECTION CORNER COMMON TO SECTIONS 1, 2, 11 & 12, TOWNSHIP 29 SOUTH, RANGE 2 EAST, N.M.P.M.;

THENCE, ALONG THE SECTION LINE COMMON TO SECTIONS 1 & 2. N oo· 15' 12" E A DISTANCE OF 2641.12 FEET TO A FOUND U.S.GLO. BRASS CAP FOUND AT THE

QUARTER CORNER COMMON TO SECTIONS 1 & 2, TOWNSHIP 29 SOUTH, RANGE 2 EAST, N.M.P.M.;

THENCE, CONTINUING ALONG THE SECTION LINE COMMON TO SECTIONS 1 & 2, N 00° 18' 39" E A DISTANCE OF 679.33 FEET TO A FOUND #5 REBAR WITH CAP STAMPED

"NMPE LS 5948" AT THE NORTHWEST CORNER OF THE PARCEL HEREIN DESCRIBED;

THENCE, LEAVING THE WESTERLY BOUNDARY OF SECTION 1, S 76' 53' 05" EA DISTANCE OF 5117.30 FEET TO THE POINT OF BEGINNING OF THE PARCEL HEREIN DESCRIBED, SAID PARCEL CONTAINING 26,892,126 SQUARE FEET OR 617.3582 ACRES OF LAND, MORE OR LESS.

PARCEL C

A CERTAIN PARCEL OF LAND SITUATE WITHIN A PORTION OF SECTION 6, TOWNSHIP 29 SOUTH, RANGE 3 EAST, NEW MEXICO PRINCIPAL MERIDIAN, DONA ANA COUNTY, NEW MEXICO, AND BEING MORE PARTICULARLY DESCRIBED BY METES AND BOUNDS AS FOLLOWS:

BEGINNING AT A #5 REBAR WITH CAP STAMPED "CHRISTMAS PS 23788" AT THE NORTHEAST CORNER OF THE PARCEL HEREIN DESCRIBED, WHENCE A U.S.G.L.0. BRASS CAP FOUND AT THE NORTHEAST CORNER OF SAID SECTION 6 TOWNSHIP 29 SOUTH, RANGE 3 EAST, NEW MEXICO PRINCIPAL MERIDIAN, BEARS N 24° 04' 35" E, A DISTANCE OF 3588.18 FEET;

THENCE, FROM THE POINT OF BEGINNING S 13° 06' 02" W A DISTANCE OF 600.02 FEET TO A FOUND #5 REBAR WITH CAP STAMPED "CHRISTMAS PS 23788" SET AT AN ANGLE POINT OF THE PARCEL HEREIN DESCRIBED;

THENCE, N 76° 53' 56" WA DISTANCE OF 707.04 FEET TO A FOUND #5 REBAR WITH CAP STAMPED "SMELSER PS 15519" SET AT AN ANGLE POINT OF THE PARCEL HEREIN DESCRIBED;

THENCE, N 13° 06' 36" E A DISTANCE OF 600.05 FEET TO A FOUND #5 REBAR WITH CAP, ILLEGIBLE SET AT AN ANGLE POINT OF THE PARCEL HEREIN DESCRIBED;

THENCE, S 76° 53' 47” E A DISTANCE OF 706.94 FEET TO THE POINT OF BEGINNING OF THE PARCEL HEREIN DESCRIBED, SAID PARCEL CONTAINING 424,221 SQUARE FEET OR 9.7388 ACRES OF LAND, MORE OR LESS.

EXHIBIT D
(to Energy Storage Agreement)

NOTICE ADDRESSES

If to Seller and not otherwise specified below, to:

Santa Teresa Storage, LLC
c/o D. E. Shaw Renewable Investments
575 Fifth Avenue, 24th Floor
New York, New York 10017
Attn: General Counsel
Email: DESRI-Notices@deshaw.com

and

Santa Teresa Solar, LLC
c/o D. E. Shaw Renewable Investments
575 Fifth Avenue, 24th Floor
New York, New York 10017
Attn: Chief Development Officer, Hy Martin
Email: hy.martin@deshaw.com

Federal Tax ID Number: 99-3558175

With additional Notices of an Event of Default or Potential Event of Default to:

Attn: General Counsel
Phone: 212.478.0000
Email: DESRI-Notices@deshaw.com

If to EPE and not otherwise specified below, to:

El Paso Electric Company
P.O. Box 962
El Paso, Texas 79960
Attn: General Counsel
Phone: 915-543-0001
Email: epelegal@epelectric.com

and

El Paso Electric Company
P.O. Box 962
El Paso, Texas 79960
Attn: James Schichtl, Vice President – Regulatory Operations & Resource Strategy
Email: james.schichtl@epelectric.com

Federal Tax ID Number: 74-0607870

With additional Notices of an Event of Default or Potential Event of Default to:

Attn: General Counsel
Phone: 915-543-0001
Email: epelegal@epelectric.com

Notices Regarding Proposed Commercial Operation Date:

Attn: Hy Martin; Liz Peyton
Phone: 212.478.0238; 914.319.5091
Email: hy.martin@deshaw.com;
liz.peyton@deshaw.com;
desri-project-delivery@world.deshaw.com

Scheduling (Current Day):

Attn: Carolyn Bultena
Phone: 832-266-7988
Email: DESRI-Notices@deshaw.com

Scheduling (Day-Ahead):

Attn: Carolyn Bultena
Phone: 832-266-7988
Email: DESRI-Notices@deshaw.com

Notices Regarding Proposed Commercial Operation Date:

Attn: EPE COD Notices
Email: CODnotices@epelectric.com

Scheduling (Current Day):

Attn: Real Time Trading
Phone: 915-543-5808
Fax: 915-543-2204
Email: realtimetrading@epelectric.com

Scheduling (Day-Ahead):

Attn: Day Ahead Trading
Phone: 915-543-4036/915-543-2044
Fax: 915-543-2204
Email: dayaheadtrading@epelectric.com

Invoices:

Attn: General Counsel
Email: desri-santa-teresa@world.deshaw.com

Payments:

Attn: General Counsel
Email: DESRI-notices@deshaw.com

Wire Transfer:

Bank: Wells Fargo Bank
ABA: 121000248
Acct: 4104096037

Credit and Collections:

Attn: General Counsel
Email: DESRI-notices@deshaw.com

Invoices:

Attn: Alejandra Guevara, Supervisor – Energy Accounting
Phone: 915-543-2055
Email: mktcheckout@epelectric.com

Payments:

Attn: Accounts Payable, Jo Ann Judd, Manager – Cash Management
Phone: 915-543-5961
Email: ap@epelectric.com
joann.judd@epelectric.com

Wire Transfer:

Bank: Well Fargo Bank
ABA: 121000248
Acct: 4825879174

***Please send an email to **cashmanagement@epelectric.com** prior to sending wire payment with the purpose of the payment and EPE internal contact to ensure your wire transfer is accurately accounted.*

Credit and Collections:

Attn: Nydia Torres, Manager – Claims and Risk Management
Phone: 915-543-2061
Email: nydia.torres@epelectric.com

EXHIBIT E
(to Energy Storage Agreement)

SELLER'S REQUIRED GOVERNMENTAL AUTHORITY PERMITS, CONSENTS, APPROVALS, LICENSES AND AUTHORIZATIONS TO BE OBTAINED

Permit, Consent, Approval, License, and/or Authorization	Governmental Entity
Construction Stormwater General Permit	Environmental Protection Agency
Solid Waste Permit	New Mexico Environmental Department
Building Permit	Doña Ana County

EXHIBIT F
(to Energy Storage Agreement)

COMMISSIONING TESTS AND ANNUAL TESTING

A. Commissioning Testing

- DC Feeder Insulation Resistance and Continuity Tests
- Inverter OEM Commissioning Procedures
- MW Control Tuning/Testing
- V/MVAR/pf Control Tuning/Testing
- AGC Control
- ESS Unit Capabilities Testing

B. Annual Testing and EPE Requested Capacity Tests

The Parties shall cooperate in good faith to determine mutually acceptable annual testing procedures for the Energy Storage Facility based on as-built design and plant configuration and in coordination with all equipment suppliers, including procedures for any EPE Requested Capacity Tests. Such annual testing and EPE Requested Capacity Test procedures shall be agreed by the Parties no later than one hundred eighty (180) Days prior to the Commercial Operation Date and shall include testing procedures relating to the (1) (PMAX / Energy), (2) Installed ESS Capacity, and (3) ESS Roundtrip Efficiency of the ESS.

EXHIBIT G
(to Energy Storage Agreement)

INSURANCE COVERAGES

Seller shall obtain and maintain the following insurance coverages, at a minimum:

(a) Workers' Compensation Insurance for statutory obligations imposed by Applicable Law, including, where applicable, the Alternate Employer Endorsement, the United States Longshoremen's and Harbor Workers' Act, the Maritime Coverage and the Jones Act;

(b) Employers' Liability Insurance, including Occupational Disease, shall be provided with a limit of (i) One Million Dollars ($1,000,000) for bodily injury per accident, (ii) One Million Dollars ($1,000,000) for bodily injury by disease per policy, and (iii) One Million Dollars ($1,000,000) for bodily injury by disease per employee;

(c) Business Automobile Liability Insurance which shall apply to all owned, non-owned, leased, and hired automobiles with a limit of One Million Dollars ($1,000,000) per accident for bodily injury and property damage;

(d) General Liability Insurance which shall apply to liability arising out of premises, operations, bodily injury, property damage, products and completed operations and liability assumed under and insured contract (contractual liability), with a limit of One Million Dollars ($1,000,000) per occurrence, Two Million Dollars ($2,000,000) aggregate. The products and completed operations coverage insurance shall be provided for the duration of any applicable warranty period;

(e) Excess Liability Insurance which shall apply to Employers Liability, Commercial General Liability and Business Automobile Liability Insurance, required in (b), (c), and (d) above, with total limits no less than of Five Million Dollars ($5,000,000) per occurrence and Five Million Dollars ($5,000,000) aggregate, when combined with primary coverages;

(f) Broad Form All-Risk Property Insurance with limits of insurance written on a replacement cost basis, including applicable sublimits for windstorm (named and unnamed), earthquake, hail, tornado, severe convective storm, wildfire, flood exposures and other customarily sublimited coverages.

Such minimum insurance limits may be satisfied either by primary insurance, excess or umbrella insurance, self-insurance or a combination of any of the foregoing.

Except for Workers' Compensation Insurance, EPE shall be endorsed as an additional insured on Seller's insurance policies required to be maintained under the ESA and such policies shall provide for a waiver of subrogation in favor of EPE. All policies of insurance required to be maintained by Seller hereunder shall provide for a severability of interests clause and include a provision that Sellers's insurance policies are to be primary and non-contributory to any insurance that may be maintained by or on behalf of EPE.

In the event that any policy furnished by Seller provides for coverage on a "claims made" basis, the retroactive date of the policy shall be the same as the Execution Date of the ESA, or such other date, as to protect the interest of EPE. Furthermore, for all policies furnished on a "claims made" basis, Seller's providing of such coverage shall survive the termination of the ESA and the expiration of any applicable warranty period, until the expiration of the maximum statutory period of limitations in the State of California for actions based in contract or in tort. If coverage is on "occurrence" basis, Seller shall maintain such insurance during the entire term of the ESA.

Seller shall promptly provide evidence of the minimum insurance coverage required under the ESA in the form of an ACORD certificate or other certificate of insurance. If any of the required insurance is cancelled or non-renewed, Seller shall within thirty (30) Days or, if due to nonpayment of premium, ten (10) Days of such cancellation or non-renewal provide written notice to EPE and file a new certificate of insurance with EPE, demonstrating that the required insurance coverage to be maintained hereunder has been extended or replaced. Neither Seller's failure to provide evidence of minimum coverage of insurance following EPE's request, nor EPE's decision to not make such request, shall release Seller from its obligation to maintain the minimum coverage provided for in this Exhibit G.

Seller shall be responsible for covering all deductibles associated with the foregoing insurance coverage.

EXHIBIT H
(to Energy Storage Agreement)

EXPECTED ANNUAL DEGRADATION

Commercial Operation Year	Expected Installed ESS Capacity with Expected Annual Degradation (MWac)
1	150
2	150
3	150
4	150
5	150
6	150
7	150
8	150
9	150
10	150
11	150
12	150
13	150
14	150
15	150
16	150
17	150
18	150
19	150
20	150

EXHIBIT I
(to Energy Storage Agreement)

ESS AVAILABILITY GUARANTEE

Section 1 Definitions

Capitalized terms used in this Exhibit I and not defined herein shall have the meaning assigned in Article 1 of the ESA.

"***Actual ESS Availability Percentage***" means a percentage calculated as (a) one hundred (100), multiplied by (b) the result of (i) the sum of all ESS Available Hours divided by (ii) the sum of all ESS Period Hours in the relevant Commercial Operation Year.

"***Aggregate ESS Availability Damages Cap***" has the meaning set forth in Section 2.1.3 of this Exhibit I.

"***Annual ESS Availability Damages Cap***" has the meaning set forth in Section 2.1.3 of this Exhibit I.

"***Annual Report***" has the meaning set forth in Section 2.3 of this Exhibit I.

"***ESS Availability Damages***" has the meaning set forth in Section 2.1.2 of this Exhibit I.

"***ESS Available Hours***" means for a relevant Commercial Operation Year, an amount of hours equal to (a) the number of ESS Period Hours in such Commercial Operation Year, minus (b) the aggregate ESS Unavailable Hours in such Commercial Operation Year.

"***ESS Excused Hours***" means, in any Commercial Operation Year, the aggregate Seller Excused Hours for such Commercial Operation Year to the extent that the ESS is affected during such hours; *provided,* that for purposes of the Guaranteed ESS Availability Percentage, only the first fifty (50) hours of Scheduled Maintenance Outages in the aggregate for the Energy Storage Facility per Commercial Operation Year shall be treated as ESS Excused Hours.

"***ESS Period Hours***" means eight thousand seven hundred sixty (8,760) hours for any given Commercial Operation Year, as may be prorated for any partial Commercial Operation Year.

"***ESS Unavailable Hours***" means, in any Commercial Operation Year, those hours, other than ESS Excused Hours, that the ESS is not available to operate because it is (a) in an emergency, stop, service mode or pause state (except to the extent that such emergency, stop, service mode or pause state also constitutes an Emergency Condition); (b) in "run" status and faulted; (c) included in Scheduled Maintenance Outages in excess of fifty (50) hours in aggregate for the Energy

Storage Facility in any Commercial Operation Year; or (d) otherwise not operational or capable of delivering Discharge Energy or accepting Charging Energy.

"***Guaranteed ESS Availability Percentage***" has the meaning set forth in Section 2.1.1 of this Exhibit I.

Section 2 Availability Guarantee

2.1. ESS Availability Guarantee

2.1.1 ESS Availability Guarantee. Seller guarantees that the ESS shall achieve an Actual ESS Availability Percentage equal to or greater than ninety five percent (95%) in each Commercial Operation Year after the Commercial Operation Date ("***Guaranteed ESS Availability Percentage***").

2.1.2 ESS Availability Damages. For any Commercial Operation Year during which Seller fails to meet the Guaranteed ESS Availability Percentage, Seller shall pay EPE liquidated damages in an amount equal to One Thousand Dollars ($1,000) per MW of Guaranteed ESS Capacity per one percent (1%) shortfall in the Guaranteed ESS Availability Percentage, calculated annually and prorated for any portion of a Commercial Operation Year ("***ESS Availability Damages***"), but in no event in excess of the Annual ESS Availability Damages Cap and the Aggregate ESS Availability Damages Cap. A sample calculation of the ESS Availability Damages that would be owed by Seller under certain stated assumptions is provided as Attachment 1 to this Exhibit I.

2.1.3 ESS Availability Damages Cap. The total ESS Availability Damages payable by Seller for failure to meet the Guaranteed ESS Availability Percentage in any Commercial Operation Year shall be capped annually at a value equivalent to Fifteen Thousand Dollars ($15,000) per MW of Guaranteed ESS Capacity ("***Annual ESS Availability Damages Cap***") and in the aggregate at a value equivalent to Forty-Five Thousand ($45,000) per MW of Guaranteed ESS Capacity ("***Aggregate ESS Availability Damages Cap***") over the Term.

2.2 Sole Remedy. The Parties agree that EPE's sole and exclusive remedy, and Seller's sole and exclusive liability, for any deficiency in the performance of the Energy Storage Facility (including any failure to meet the Effective Guaranteed ESS Availability Percentage) shall be the payment of damages up to the Annual ESS Availability Damages Cap and the Aggregate ESS Availability Damages Cap, as applicable, and the right to declare an Event of Default pursuant to Section 13.1.3(d) of the ESA, and shall not be subject to the collection of any other damages or any other remedies, including specific performance, and shall not be an Event of Default giving rise to a termination payment obligation except pursuant to Section 13.1.3(d) of the ESA, as applicable. Notwithstanding the foregoing, the limitations set forth herein shall not be applicable to any indemnification claims pursuant to Article 21 of the ESA and Seller's material breach of its

obligation to operate and maintain the Energy Storage Facility in accordance with Prudent Utility Practice or Seller's failure to pay ESS Availability Damages when due if not timely cured pursuant to the provisions of Article 13 of the ESA are an Event of Default of Seller for which EPE may terminate the ESA and seek damages in accordance with Section 13.4 of the ESA.

2.3 Annual Report. No later than the thirtieth (30th) Day of such Commercial Operation Year (or thirty (30) Days after the end of the last Commercial Operation Year), Seller shall deliver to EPE a calculation showing Seller's computation of Actual ESS Availability Percentage for the previous Commercial Operation Year and the ESS Availability Damages, if any, due to EPE (the "***Annual Report***"). Such Annual Report shall include the total amount of ESS Availability Damages paid to EPE under the ESA and shall provide notice that the Aggregate ESS Availability Damages Cap has been reached, if applicable. If ESS Availability Damages are due from Seller, Seller shall pay such damages no later than fifteen (15) Business Days after providing the Annual Report.

2.4 Disputes. Disputes as to any calculations under this Exhibit I shall be addressed as provided in Section 14.8 of the ESA.

ATTACHMENT 1 TO EXHIBIT I

EXAMPLE CALCULATION OF ESS AVAILABILITY DAMAGES

I. Example of Actual ESS Availability Percentage Calculation

The sample calculation set forth below is based on the following assumed facts:

The ESS had the following operating characteristics:

	Hours
ESS Period Hours ("EPH")	8,760
ESS Unavailable Hours ("EUH")	425

Given these assumed facts, the ESS Available Hours for the ESS during the Commercial Operation Year would be calculated as follows:

Sum of ESS Available Hours = EPH – EUH: 8,760 – 425 = 8,335

Actual ESS Availability Percentage

Given these assumed facts, the Actual ESS Availability Percentage for the Energy Storage Facility during the Commercial Operation Year in question would be calculated as follows:

(a) Sum of ESS Available Hours: 8,335 hours

(b) Sum of ESS Period Hours: 8,760 hours

(c) Actual ESS Availability Percentage:

(Sum of ESS Available Hours / Sum of ESS Period Hours) x 100 = (8,335 / 8,760) x 100 = 95.1%

II. Example of ESS Availability Damages

Example of ESS Availability Damages based on the following assumed facts:

(a) Seller's Guaranteed ESS Availability Percentage in Commercial Operation Year 4 = 95%.

(b) Seller's Actual ESS Availability Percentage in Commercial Operation Year 4 = 93%.

(c) Seller's Guaranteed ESS Capacity = 150 MW.

Given these assumed facts, Seller calculates the ESS Availability Damages due to EPE as follows:

((Seller's Guaranteed ESS Availability Percentage in Commercial Operation Year 4, expressed as a decimal - Seller's Actual ESS Availability Percentage in Commercial Operation Year 4, expressed as a decimal) x (100)) x (ESS Availability Damage rate of $1,000 x Guaranteed ESS Capacity) = ESS Availability Damage

((0.95 – 0.93) x 100) x (1,000 x 150) = $300,000

EXHIBIT J
(to Energy Storage Agreement)

FORM OF SELLER GUARANTY

GUARANTY

This Guaranty (this "***Guaranty***"), dated as of [_____], 2024 (the "***Effective Date***"), is issued and delivered by D. E. SHAW RENEWABLE INVESTMENTS, L.L.C., a Delaware limited liability company (the "***Guarantor***"), for the benefit of EL PASO ELECTRIC COMPANY, a Texas corporation (the "***Beneficiary***").

WHEREAS, the Beneficiary and SANTA TERESA STORAGE, LLC, a Delaware limited liability company (the "***Obligor***"), entered into that certain Energy Storage Agreement, dated as of [ ] (as may be amended, restated, replaced or assigned from time to time in accordance with the terms thereof, the "***Agreement***"); and

WHEREAS, Guarantor wishes to deliver to the Beneficiary this Guaranty as an inducement to Beneficiary to enter into the Agreement.

NOW, THEREFORE, in consideration of the foregoing and for good and valuable consideration, the Guarantor hereby agrees as follows:

1. General. Unless otherwise defined herein, all capitalized terms used in this Guaranty that are defined in the Agreement shall have the respective meanings assigned to them in the Agreement. Guarantor hereby absolutely, unconditionally and irrevocably guarantees, as an independent obligation of Guarantor, the prompt and complete payment to the Beneficiary when due, but in no case more than five (5) Business Days after Beneficiary delivers a written demand for payment, of the following obligations of Obligor under the Agreement (the "***Guaranteed Obligations***"):

(a) for the period beginning on the Effective Date until the earlier of the date on which (i) the Guaranteed Obligations have been satisfied in full and (ii) Seller has posted the Delivery Term Security, all claims under the Agreement up to an amount equal to Fifteen Million Dollars ($15,000,000.00) (the "***Development Security Cap***");

(b) for the period beginning on the earlier of (i) the Commercial Operation Date and (ii) the Outside Commercial Operation Date until the earlier of (x) the date on which the Guaranteed Obligations have been satisfied in full and (y) the eleventh (11th) anniversary of the Commercial Operation Date, all claims under the Agreement up to an amount equal to Fifteen Million Dollars ($15,000,000.00) (the "***Initial Delivery Term Security Cap***"); and

(c) from and after the eleventh (11th) anniversary of the Commercial Operation Date until the end of the Expiration Date, all claims under the Agreement up to an amount equal to Nine Million Seven Hundred Fifty Thousand Dollars ($9,750,000.00) (the "***Reduced Delivery Term Security Cap***");

provided, that, upon a final, nonappealable adjudication by a court of competent jurisdiction that Guarantor is obligated to pay any of the Guaranteed Obligations hereunder, the Guarantor shall pay Beneficiary, no more than five (5) Business Days after Beneficiary delivers a written demand for payment therefor, for all reasonable and documented out-of-pocket costs and expenses incurred by Beneficiary in enforcing its rights under this Guaranty, and payment of such reasonable and documented out-of-pocket costs and expenses shall not be subject to the Development Security Cap, the Initial Delivery Term Security Cap or the Reduced Delivery Term Security Cap, as applicable.

2. Nature of Guaranty. This Guaranty is one of payment and not of collection and shall apply regardless of whether recovery of any Guaranteed Obligations may be or becomes barred by any statute of limitations, discharged, or uncollectible due to any change in law or regulation or in any bankruptcy, insolvency or other proceeding, or otherwise be unenforceable. All sums payable by Guarantor hereunder shall be made in immediately available funds without any setoff, deduction, counterclaim or withholding for taxes unless required by Applicable Law, in which case Guarantor shall pay, in addition to the payment to which Beneficiary is otherwise entitled, such additional amount as is necessary to ensure that the net amount actually received by Beneficiary (free and clear of any setoff, deduction, counterclaim or withholding for taxes) will equal the full amount which Beneficiary would have received had no such setoff, deduction, counterclaim or withholding been required. The Guarantor agrees that this Guaranty is an independent obligation of Guarantor, and that the Beneficiary may resort to the Guarantor for payment of any of the Guaranteed Obligations, whether or not the Beneficiary shall have resorted to any collateral security, or shall have proceeded against the Obligor with respect to any of the Guaranteed Obligations. If any payment of the Obligor in respect of the Guaranteed Obligations is rescinded or must otherwise be returned for any reason whatsoever, the Guarantor shall remain liable hereunder in respect to such Guaranteed Obligations as if such payment had not been made. No failure on the part of the Beneficiary to exercise, and no delay in exercising, any right, remedy or power hereunder shall operate as a waiver thereof, nor shall any single or partial exercise by the Beneficiary of any right, remedy or power hereunder preclude any other future exercise of any right, remedy or power.

3. Waivers. Guarantor expressly waives (a) protest; (b) notice of acceptance, dishonor, presentment and demand and all other notices whatsoever; (c) demand for payment of any of the Guaranteed Obligations; (d) any right to assert against Beneficiary any defense (legal or equitable), counter-claim, set-off, cross-claim or other claim that Guarantor may now or at any time hereafter have (i) against Obligor or (ii) acquired from any other party, not affiliated with Guarantor, to which Beneficiary may be liable; (e) any defense arising by reason of any claim or defense based upon an election of remedies by Beneficiary which in any manner impairs, affects, reduces, releases, destroys or extinguishes Guarantor's subrogation rights, rights to proceed against Obligor for reimbursement, or any other rights of the Guarantor to proceed against Obligor or against any

other person, property or security; and (f) any and all other suretyship defenses. Beneficiary may at any time, whether before or after termination of this Guaranty, and from time to time without notice to or consent of Guarantor and without impairing or releasing the obligations of Guarantor hereunder: (1) modify, compromise, release, subordinate, substitute, exercise, alter, enforce or fail or refuse to exercise or enforce any claims, rights or remedies of any kind which Beneficiary may have, at any time against Obligor or Guarantor, endorser, or other party liable for the Guaranteed Obligations or any part or term thereof, or with respect to collateral or security of any kind Beneficiary may have, at any time, whether under the Agreement, any other agreement, or this Guaranty, or otherwise; (2) release, substitute, or surrender and to enforce, collect or liquidate or to fail or refuse to enforce, collect or liquidate, any collateral or security of any kind Beneficiary may have, at any time, whether under this Guaranty or otherwise; and (3) take and hold security for the payment and performance of the Guaranteed Obligations, and exchange, enforce, waive, and release or apply such security and direct the order or manner of sale thereof as Beneficiary in its discretion may determine. Guarantor hereby consents to each and all of the foregoing acts, events and/or occurrences.

4. Limitations. This Guaranty shall continue in full force and effect with respect to all Guaranteed Obligations arising prior to its termination. This Guaranty shall continue to be effective or be reinstated, as the case may be, if at any time payment, or any part thereof, of any Guaranteed Obligation is rescinded or must otherwise be restored or returned due to bankruptcy or insolvency laws or otherwise. The failure of Beneficiary to enforce any of the provisions of this Guaranty at any time or for any period of time shall not be construed to be a waiver of any such provision or the right thereafter to enforce the same. Each and every right, remedy and power hereby granted to the Beneficiary or allowed to it by law or other agreement shall be cumulative and not exclusive of any other, and may be exercised by the Beneficiary from time to time. The terms and provisions hereof may not be waived, altered, modified, or amended except in a writing executed by Guarantor and a duly authorized officer of Beneficiary.

5. Subordination. Until all Guaranteed Obligations are paid in full, Guarantor hereby waives all rights of subrogation, reimbursement, contribution, and indemnity from Obligor and any collateral held therefor, and Guarantor hereby subordinates all rights under any debts owing from Obligor to Guarantor, whether now existing or hereafter arising, to the prior payment of the Guaranteed Obligations. No payment in respect of any such subordinated debts shall be received by Guarantor. Upon any Obligation becoming due, Obligor or its assignee, trustee in bankruptcy, receiver, or any other person having custody or control over any or all of Obligor's property is authorized and directed to pay to Beneficiary the entire unpaid balance of the debt before making any payments to Guarantor, and for that purpose. Any amounts received by Guarantor in violation of the foregoing shall be received as trustee for the benefit of Beneficiary and shall forthwith be paid over to Beneficiary.

6. Representations and Warranties. The Guarantor represents and warrants to Beneficiary that: (a) it is duly organized, validly existing and in good standing under the laws of the jurisdiction of its formation and has full limited liability company power to execute, deliver and perform this Guaranty; (b) the execution, delivery and performance of this Guaranty have been and remain duly authorized by all necessary limited liability company action and do not contravene any provision

of law or the Guarantor's constitutional documents or any contractual restriction binding on the Guarantor or its assets; and (c) this Guaranty constitutes the legal, valid and binding obligation of the Guarantor enforceable against Guarantor in accordance with its terms, subject, as to enforcement, to bankruptcy, insolvency, reorganization and other laws of general applicability relating to or affecting creditor's rights and to general equity principles and public policy.

7. Termination. This Guaranty shall remain in full force and effect until the earlier of: (a) such time as all of the Guaranteed Obligations have been paid and discharged in full; (b) such time as the Development Security Cap, the Initial Delivery Term Security Cap or the Reduced Delivery Term Security Cap, as applicable, is reached; (c) this Guaranty is replaced with a different form of Security in accordance with the terms and conditions of the Agreement; and (d) the end of the Term (the "***Expiration Date***"); provided, however, that the Guarantor will remain liable hereunder for Guaranteed Obligations that were outstanding prior to the Expiration Date.

8. Governing Law. The interpretation and performance of this Guaranty and each of its provisions shall be governed and construed in accordance with the laws of the State of Texas, notwithstanding its conflict of laws rules or any principles that would trigger the application of any other law. All disputes arising out of or related to this Guaranty shall be brought in the state or federal courts located in El Paso, Texas.

9. Entire Agreement. The terms and provisions contained in this Guaranty constitute the entire agreement between Guarantor and Beneficiary with respect to the subject matter hereof and shall supersede all previous communications, representations, or agreements, either oral or written, between Guarantor and Beneficiary with respect to the subject matter hereof.

10. Severability. In the event any of the terms, covenants, or conditions of this Guaranty, or the application of any such terms, covenants, or conditions, shall be held invalid, illegal, or unenforceable by any court or administrative body having jurisdiction, all other terms, covenants, and conditions of this Guaranty and their application not adversely affected thereby shall remain in force and effect; provided, however, that Guarantor and Beneficiary shall negotiate in good faith to attempt to implement an equitable adjustment in the provisions of this Guaranty with a view toward effecting the purposes of this Guaranty by replacing the provision that is held invalid, illegal, or unenforceable with a valid provision the economic effect of which comes as close as possible to that of the provision that has been found to be invalid, illegal or unenforceable.

11. Disclaimer of Certain Third Party Beneficiary Rights. Nothing in this Guaranty shall be construed to create any duty to, or standard of care with reference to, or any liability to, any Person not a party to this Guaranty.

12. Assignment. Guarantor may not assign its rights nor delegate its obligations under this Guaranty in whole or part, without written consent of Beneficiary, and any purported assignment or delegation absent such consent is void. Beneficiary may not assign its rights nor delegate its obligations under this Guaranty in whole or part, without written consent of Guarantor, except that this Guaranty may be assigned by Beneficiary in connection with a permitted assignment of the Agreement. Any purported assignment or delegation in violation of this Section 12 is void

13. MAXIMUM LIABILITY. NOTWITHSTANDING ANYTHING TO THE CONTRARY CONTAINED OR IMPLIED ELSEWHERE IN THIS GUARANTY, THE MAXIMUM AGGREGATE LIABILITY OF GUARANTOR HEREUNDER FOR PAYMENT OF THE GUARANTEED OBLIGATIONS SHALL NOT EXCEED THE DEVELOPMENT SECURITY CAP, THE INITIAL DELIVERY TERM SECURITY CAP OR THE REDUCED DELIVERY TERM SECURITY CAP, AS APPLICABLE AS OF THE TIME OF DETERMINATION, PLUS ANY ENFORCEMENT COSTS, EXPENSES OR FEES OF BENEFICIARY AS SET FORTH IN SECTION 1.

14. Notices. Notices required by this Guaranty shall be addressed to the other party at the addresses noted below as either party updates them from time to time by written notice to the other party. Any notice, request, consent, or other communication required or authorized under this Guaranty to be given by one party to the other party shall be in writing. It shall either be hand delivered or mailed via overnight service with signature required upon receipt, to the representative of said other party. If hand delivered, the notice, request, consent or other communication shall be simultaneously sent by facsimile or other electronic means. Any such notice, request, consent, or other communication shall be deemed to have been received by the close of the Business Day on which it was hand delivered or transmitted electronically (unless hand delivered or transmitted after such close in which case it shall be deemed received at the close of the next Business Day).

If to the Guarantor, at:

D. E. Shaw Renewable Investments, L.L.C.
575 Fifth Avenue, 24th Floor
New York, New York 10017
Attn: General Counsel
Email: DESRI-Notices@deshaw.com

If to the Beneficiary, at:

El Paso Electric Company
100 N. Stanton St.
El Paso, Texas 79901
Attn: [_____]
Phone: [_____]
Fax: [_____]
Email: [_____]

With a copy to:

[_____]
[Address]
[Address]
Attn. [_____]
Phone: [_____]
Email: [_____]

IN WITNESS WHEREOF, the Guarantor and the Beneficiary have executed this Guaranty as of the Effective Date.

Guarantor:

D. E. Shaw Renewable Investments, L.L.C.,
a Delaware limited liability company

_____

Name: _____

Title: _____

Beneficiary:

El Paso Electric Company,
a Texas corporation

_____

Name: _____

Title: _____

EXHIBIT K
(to Energy Storage Agreement)

COMMERCIAL OPERATION FORM OF CERTIFICATION

This certification ("***Certification***") of Commercial Operation is delivered by Santa Teresa Storage, LLC ("***Seller***") to El Paso Electric Company ("***EPE***") in accordance with the terms of that certain Energy Storage Agreement dated as of [ ] (the "***ESA***") by and between Seller and EPE. All capitalized terms used in this Certification but not otherwise defined herein shall have the respective meanings assigned to such terms in the ESA.

Seller hereby certifies and represents to EPE the following:

(1) An Energy Storage System with a designed power output capability of One Hundred Fifty (150) MW for four (4) consecutive hours has been constructed, commissioned and tested and is capable of delivering Discharge Energy on a sustained basis (in accordance with the ESS manufacturer's requirements and the Commissioning Tests);

(2) Seller is not in breach of the Interconnection Agreements or the Shared Facilities Agreement; and

(3) the Energy Storage Facility has been completed in all material respects (except for Delayed ESS Capacity and punch list items that do not materially and adversely affect the ability of the Energy Storage Facility to operate as intended).

A certified statement of the Licensed Professional Engineer, attached hereto, has been provided as evidence of Commercial Operation of the Energy Storage Facility to provide Product and meet, at a minimum, the requirements indicated herein.

[***Signature page(s) follow***]

EXECUTED by SELLER this [●] day of [●], 20__

Seller:

SANTA TERESA STORAGE, LLC
a Delaware limited liability company

_____

Name: _____

Title: _____

Licensed Professional Engineer:

[●],
a [insert state] [corporation/limited liability company]

_____

Name: _____

Title: _____

Date: _____

License Number and LPE Stamp:

EXHIBIT L
(to Energy Storage Agreement)

OPERATING LIMITATIONS

The Operating Limitations of the Energy Storage Facility are as set out in this Exhibit L. Final Operating Limitations for the Energy Storage Facility will be mutually developed and agreed upon by the Parties within one hundred eighty (180) Days of the Commercial Operation Date. The Operating Limitations will be periodically reviewed to optimize operations for both Parties. The Parties shall cooperate to integrate the systems and controls necessary to implement the Operating Limitations.

a. EPE shall not use the Energy Storage Facility prior to the Commercial Operation Date.

b. Maximum Annual Average State of Charge <60% or as per manufacturer recommendation.

c. Minimum State of Charge during Non-Operating Periods <20% or as per manufacturer recommendation.

d. Maximum Equivalent Full Cycles Per Year: 340

e. Maximum Equivalent Full Cycles Per Day: 2

f. Minimum and Maximum Ambient Operating Temperatures as per manufacturer recommendation.

EXHIBIT M
(to Energy Storage Agreement)

DELAY DAMAGE RATE

The Damage Rate shall be as follows:

(a) $250 per Day, for each Day beginning on the Day following the Expected Commercial Operation Date through the thirtieth (30th) Day following the Expected Commercial Operation Date;

(b) $500 per Day, for each Day beginning on the thirty first (31st) Day following the Expected Commercial Operation Date through the sixtieth (60th) Day following the Expected Commercial Operation Date; and

(c) $750 per Day, beginning on the sixty first (61st) Day following the Expected Commercial Operation Date until the later of the Commercial Operation Date and the Outside Commercial Operation Date.

BEFORE THE NEW MEXICO PUBLIC REGULATION COMMISSION

APPLICATION FOR APPROVAL OF EL PASO ELECTRIC COMPANY'S RENEWABLE ENERGY ACT PLAN FOR 2026, AND NINTH REVISED RATE NO. 38 – RPS COST RIDER	)	**CASE NO. 25-00___-UT**
EL PASO ELECTRIC COMPANY, Applicant.	)	

DECLARATION OF EMMANUEL VILLALOBOS IN SUPPORT OF THE FOREGOING DIRECT TESTIMONY TO EL PASO ELECTRIC COMPANY'S APPICATION FOR APPROVAL OF ITS RENEWABLE ENERGY ACT PLAN FOR 2025, AND NINTH REVISED RATE NO. 38 – RPS COST RIDER

I, ***Emmanuel Villalobos***, pursuant to Rule 1-011 NMRA, state as follows:

1. I affirm in writing under penalty of perjury under the laws of the State of New Mexico that the following statements are true and correct.

2. I am over 18 years of age and have personal knowledge of the facts stated herein. I am employed by El Paso Electric Company ("EPE" or "the Company") as the *Director of Market Development and Resource Strategy Department.*

3. The foregoing Direct Testimony of Emmanuel Villalobos, together with all exhibits sponsored therein and attached thereto, is true and accurate based on my knowledge and belief.

4. I submit this Declaration, based upon my personal knowledge and upon information and belief, in support of EPE's ***Application for Approval of Its Renewable Energy Act Plan for 2026, and Ninth Revised Rate No. 38 – RPS Cost Rider.***

FURTHER, DECLARANT SAYETH NAUGHT.

I declare under penalty of perjury that the foregoing is true and correct.

Executed on May 1, 2025.

/s/ *Emmanuel Villalobos*

EMMANUEL VILLALOBOS

BEFORE THE NEW MEXICO PUBLIC REGULATION COMMISSION

APPLICATION FOR APPROVAL OF	**)**	
EL PASO ELECTRIC COMPANY'S	**)**	
RENEWABLE ENERGY ACT PLAN FOR 2026,	**)**	
AND NINTH REVISED RATE NO. 38 – RPS	**)**	**CASE NO. 25-00___-UT**
COST RIDER	**)**	
	)	
EL PASO ELECTRIC COMPANY,	**)**	
Applicant.	**)**	
	)	

DIRECT TESTIMONY OF

WAYNE J. OLIVER

AS INDEPENDENT EVALUATOR

MAY 1, 2025

EL PASO ELECTRIC COMPANY
DIRECT TESTIMONY OF
WAYNE J. OLIVER

TABLE OF CONTENTS

SUBJECT **PAGE**

I. INTRODUCTION 1

II. PURPOSE OF TESTIMONY 4

III. INDEPENDENT EVALUATOR FOR EPE'S 2023 RENEWABLE ENERGY RFP FOR NEW MEXICO 7

IV. SUMMARY OF CONCLUSIONS IN THE FINAL IE REPORT 10

V. CONCLUSION 19

EXHIBITS

Exhibit WJO-1 Resume of Wayne J. Oliver
Exhibit WJO-2 Competitive Bidding Experience
Exhibit WJO-3 Independent Evaluator Services Statement of Work
Exhibit WJO-4 Final Report of the Independent Evaluator

EL PASO ELECTRIC COMPANY
DIRECT TESTIMONY OF
WAYNE J. OLIVER

I. INTRODUCTION

Q1. PLEASE STATE YOUR NAME, POSITION, AND BUSINESS ADDRESS.

A. My name is Wayne J. Oliver. I am CEO and Founder of Merrimack Energy Group, Inc. ("Merrimack Energy"). My business address is 26 Shipway Place, Charlestown, Massachusetts 02129.

Q2. PLEASE SUMMARIZE YOUR EDUCATIONAL AND PROFESSIONAL EXPERIENCE.

A. My resume is attached as Exhibit WJO-1. I have over 40 years of experience in the energy industry. During that time, I have held senior level positions as an economist and consultant with government agencies and private sector firms. I was formerly a Founder and Senior Officer of Reed Consulting Group, Inc. I also served as a Director of Navigant Consulting, Inc. after the acquisition of Reed Consulting Group by Metzler and Associates in 1997 and the subsequent formation of Navigant Consulting to integrate a number of consulting firms acquired by Metzler and Associates. I have also been an assistant professor in the Economics Department at Northeastern University and an adjunct professor in the Finance Department at Babson College, where I taught courses in risk management (at a Master of Business Administration level) and futures and options. I have a Masters' degree in economics.

Q3. WHAT IS YOUR EXPERIENCE WITH COMPETITIVE BIDDING PROGRAMS AND POWER PROCUREMENT PROCESSES?

A. I have served as a project manager for approximately 170 competitive bidding or competitive power procurement assignments in twenty-three states and three Canadian Provinces on behalf of electric utilities, public utility commissions, other power buyers, and public sector organizations representing a range of different technologies, project structures, and product types, dating back to the late 1980s. Among the competitive bidding assignments identified above, I have served as Independent Evaluator ("IE"), Independent Monitor ("IM") or similar function on over one hundred forty competitive bidding processes for renewable resources, conventional supply-side resources, energy storage, combined renewable and energy storage projects, long lead-time energy resources such as long-duration energy storage projects, and demand-side management resources. For these assignments, I have reviewed and evaluated thousands of power supply and demand-side proposals in the United States and Canada. I have also assisted clients in the design and development of competitive bidding programs, the development of the rules and guidelines underlying the requirements to undertake competitive bidding for power supplies, the development of Request for Proposals ("RFPs") documents and contracts, and evaluation criteria for both power supply and load management options, and in the negotiation of power contracts. In addition, I have provided technical assistance to utilities and others in evaluating bids in the areas

of economic modeling and quantitative assessment of bids, fuel supply arrangements, critical path assessment, credit and financial issues, and the commercial terms of power supply contracts. I have also worked with power generators in submitting power supply proposals, conducting market assessments, benchmark studies and conducting due diligence assessments for power project acquisition.

A complete list and description of my competitive procurement experience is provided in Exhibit WJO-2 entitled Competitive Bidding Experience Statement of Merrimack Energy.

Q4. HAVE YOU SERVED AS INDEPENDENT EVALUATOR FOR PREVIOUS EL PASO ELECTRIC COMPANY RESOURCE SOLICITATIONS?

A. Yes, I have. In addition to recently serving as IE for El Paso Electric Company's ("EPE" or "Company") 2023 Request for Proposals for Renewable Energy for New Mexico ("2023 Renewable Energy RFP for New Mexico") and El Paso Electric's 2023 All Source RFP for Texas, I served as IE for El Paso Electric's All Source Request for Proposals for Electric Power Supply and Load Management Resources for New Mexico ("2021 All Source RFP for NM"). I also served as IE for the following EPE RFPs: (1) EPE's 2021 All Source Request for Proposal for Electric Power Supply and Load Management Resources for Texas; (2) 2019 Request for Proposals for Renewable Energy for New Mexico; (3) EPE's 2017 All Source RFP;

(4) EPE's 2011 Request for Proposals for Electric Peaking Power Supply and Load Management Resources; (5) EPE's 2011 RFP for Solar Projects; and (6) EPE's 2008 Request for Proposals for Electric Peaking Power Supply and Load Management Resources.

Q5. HOW ARE YOU BEING COMPENSATED FOR THIS ENGAGEMENT?

A. I am being compensated by EPE for this assignment on an hourly basis.

Q6. IS YOUR COMPENSATION TIED IN ANY WAY TO YOUR FINDINGS, RECOMMENDATIONS, OR CONCLUSIONS?

A. No, it is not.

II. PURPOSE OF TESTIMONY

Q7. WHAT IS THE PURPOSE OF YOUR TESTIMONY IN THIS PROCEEDING?

A. The purpose of my testimony is to address my role as Independent Evaluator for EPE's 2023 Renewable Energy RFP for New Mexico. I was involved in this competitive procurement process from the development of EPE's 2023 Request for Proposals for Renewable Energy for New Mexico through final resource selection with the objective of obtaining short-term and/or long-term cost effective and reliable renewable electric resources to meet EPE's New Mexico Renewable

Portfolio Standard ("RPS") requirements identified by EPE in its 2023 RFP for New Mexico. As IE, I was primarily responsible for reviewing and tracking EPE's implementation of this competitive procurement process from design of the RFP documents through the bid evaluation and selection process with the objective of ensuring that the execution of the solicitation process was undertaken in a fair, competitive, transparent and unbiased manner, within the overall objective of providing the best outcome for EPE's New Mexico customers.

In my testimony, I describe the role of the IE for this assignment based on EPE's Independent Evaluator Services Statement of Work ("Statement of Work") contained as an Appendix to the Master Consulting Services Agreement between EPE and Merrimack Energy and my previous experience as IE in a number of other similar competitive procurement assignments. A copy of the Statement of Work is attached to my testimony as Exhibit WJO-3. I will also discuss my observations and findings regarding the development and implementation of EPE's competitive procurement process, which is contained in Exhibit WJO-4, Independent Evaluator Final Report ("IE Final Report"). The IE Final Report, which I prepared, is summarized as follows:

- Provides a detailed description of the entire competitive procurement process for EPE's 2023 Renewable Energy RFP for New Mexico from the development of the RFP documents through the selection of the renewable energy resource;

- Assesses the activities and performance of EPE's RFP team in carrying out the competitive procurement process based on the approach described in the RFP documents;
- Describes the steps taken by EPE to ensure the competitive procurement process was undertaken in a fair, objective, and transparent manner;
- Describes the evaluation and selection process undertaken by EPE which led to a least cost selection of resources for the benefit of EPE's New Mexico customers; and
- Presents the IE's observations, conclusions and recommendations regarding the competitive procurement process.

Q8. PLEASE DESCRIBE THE OVERALL OBJECTIVE OF THE 2023 RENEWABLE ENERGY RFP FOR NEW MEXICO.

A. EPE issued the 2023 Renewable Energy RFP for New Mexico with the objective of obtaining short-term and/or long-term, cost effective and reliable electric resources available to meet EPE's New Mexico Renewable Portfolio Standard ("RPS") requirements per the New Mexico Renewable Energy Act ("REA") implemented through the New Mexico Public Regulation Commission ("NMPRC") Rule 17.9.572 ("Rule 572"). EPE intended to select proposals through the 2023 Renewable Energy RFP for New Mexico to meet near-term RPS

obligations to comply with the REA and Rule 572 and will seek required approval for the procurement from the NMPRC. EPE's preliminary determination is that it requires up to 150,000 megawatt hours ("MWh") of renewable energy per year beginning May 1, 2025, if achievable, but no later than May 1, 2027.

III. INDEPENDENT EVALUATOR FOR EPE'S 2023 RENEWABLE ENERGY RFP FOR NEW MEXICO

Q9. PLEASE DESCRIBE THE OVERALL ROLE OF AN INDEPENDENT EVALUATOR IN A COMPETITIVE BIDDING OR PROCUREMENT PROCESS.

A. The overriding responsibility of the Independent Evaluator is to ensure the competitive procurement process is undertaken in a fair, objective, transparent, and unbiased manner with the objective of providing the best outcome for EPE's customers. In addition, the IE ensures that no undue preference is provided to any bidder including utility self-build options or utility affiliates, if any. The IE's involvement in the solicitation process generally begins during the RFP development phase of the process prior to issuance of the RFP, continues through the proposal evaluation and selection process, and in some cases, includes monitoring of the contract negotiation process.

Q10. DID EPE OFFER A SELF-BUILD OPTION IN THIS SOLICITATION?

A. Yes. On page 1 of EPE's 2023 Request for Proposals for Renewable Energy for New Mexico document, EPE stated that EPE may also submit a self-build in response to the RFP. EPE's Energy Solutions and Business Development Department team did submit a self-build resource into the RFP that included two options: (a) standalone solar PV for 100 MWac; and (b) a 50 MW four-hour duration Battery Energy Storage System resource. As discussed in Exhibit WJO-4, the IE report states, (Section 4.2.3, page 22), that EPE initiated safeguards at the beginning of the design of the solicitation process to ensure that a self-build resource would be treated similarly relative to all other proposals and that the self-build would have no inherent competitive advantage.

Q11. WHAT WAS YOUR ROLE IN EPE'S 2023 RENEWABLE ENERGY RFP FOR NEW MEXICO?

A. As noted, my role as IE was to ensure that the solicitation process was undertaken in a fair, objective and unbiased manner and that the evaluation and selection process resulted in the selection of proposals that are consistent with the goals and objectives of EPE articulated in the RFP documents. I performed the functions of the IE as contained in the Independent Evaluator Services Statement of Work included as Appendix 2 in the Master Consulting Services Agreement between El Paso Electric Company and Merrimack Energy Group, Inc. ("Statement of Work") which is included as Exhibit WJO-3.

The key roles and major responsibilities of the IE under the Statement of Work include the following:

1. Review and track the utility's implementation of the competitive procurement process from design of the RFP through contract negotiations, if requested;[1]
2. Maintain a review and oversight function over the 2023 Renewable Energy RFP for New Mexico process including:
   a. Review and comment on the Draft RFP;
   b. Review the evaluation of proposals submitted; and
   c. Monitor communications with market participants;
3. Report any problems or concerns with the bidding process to EPE for purposes of resolving any issues; and
4. Submit a final report on the solicitation process which includes a description and review of the competitive procurement process, the evaluation and selection of proposals, and provides conclusions and recommendations regarding the 2023 Renewable Energy RFP for New Mexico.

[1] For both the 2023 New Mexico and Texas solicitation processes, EPE did not request that Merrimack Energy monitor the contract negotiation process. Merrimack Energy's involvement in the solicitation process extended through selection of the resources for which EPE would begin negotiations.

A more detailed description of the roles and responsibilities of the IE are presented in the Independent Evaluator Final Report.

IV. SUMMARY OF CONCLUSIONS IN THE FINAL IE REPORT

Q12. HAVE YOU PREPARED A REPORT ON EPE'S 2023 RENEWABLE ENERGY RFP COMPETITIVE PROCUREMENT PROCESS AND YOUR INVOLVEMENT IN THAT PROCESS?

A. Yes. I prepared a detailed report on EPE's solicitation process entitled Independent Evaluator Final Report for El Paso Electric Company 2023 Request for Proposals for Renewable Energy for New Mexico. The IE Report describes the competitive procurement process in detail from design and development of the 2023 Renewable Energy RFP for New Mexico through final resource selection. The report includes a description of the evaluation criteria and methodology implemented to evaluate proposals received, the role of the IE in the solicitation process, the safeguards implemented by EPE to ensure any utility-owned projects did not have an undue competitive advantage, the consistency of the process with industry standards for similar solicitations, key issues identified and addressed with EPE during the solicitation process, and the basis for and results associated with the proposal evaluation and selection processes. The report also addresses the unique energy market conditions affecting the procurement process, bidders' responses to the RFP, interconnection requirements and timing, regulatory requirements and other

factors that affected the implementation of the solicitation process as well as the adjustments and revisions to the solicitation process by EPE to address the unique issues. As previously noted, the IE Final Report is attached as Exhibit WJO-4.

Q13. PLEASE SUMMARIZE YOUR OBSERVATIONS AND CONCLUSIONS REGARDING THE 2023 RENEWABLE ENERGY RFP FOR NEW MEXICO PROCESS UNDERTAKEN BY EPE.

A. My observations and conclusions regarding EPE's competitive procurement process are presented in Exhibit WJO-4. I have summarized the major findings and conclusions below.

1. The 2023 Renewable Energy RFP for New Mexico RFP documents were reasonably detailed and transparent. The RFP documents clearly identified the nature of the solicitation process, energy resource requirements identified for procurement by EPE, the eligible products and resources sought, characteristics of importance for EPE, a description of the evaluation criteria and process to be undertaken, the amount and timing of energy required based on regulatory requirements, the information required of bidders, information on the transmission and interconnection requirements including identification of constrained areas of the EPE system, and the context of the solicitation within the El Paso Electric system.

The RFP documents were designed to allow bidders to effectively reflect the requirements outlined in the RFP and related documents to effectively structure their proposals

2. The 2023 Renewable Energy RFP for New Mexico resulted in a reasonably robust response from the market, with a competitive number of proposals and more MW of capacity and energy than required. Proposals submitted included Purchased Power Agreements, Build Transfer Agreements, and a self-build resource. Overall, EPE received a total of 59 proposal options from 20 unique projects submitted by 14 bidders.

3. While EPE clearly identified its requirements for up to 150,000 MWh of RPS eligible renewable energy per year beginning May 1, 2025, if achievable, but no later than May 1, 2027 to comply with the REA requirements implemented through the NMPRC's Rule 17.9.572 ("Rule 572"), there was a limited market response for the renewable energy requirements stated in the RFP. While the requirements for 150,000 MWh of renewable energy would correlate to the generation from a solar project in New Mexico of approximately 50 MWac, the vast majority of proposals submitted offered much more renewable energy than required by EPE, offered combined solar combined with storage projects that exceeded

requirements, or for one appropriately sized resource, offered exorbitant pricing;

4. The outreach efforts and related activities implemented by EPE were broad reaching and were targeted toward existing contacts and new bidders. This included notification to a large list of project developer contacts from previous solicitations and additions since the previous solicitations, publication of a press release regarding issuance of the RFP which resulted in coverage by industry trade publications, bidder access to notices about the RFP on the Company website, inclusion of a Bidders webinar on the RFP, and a Question and Answer process for potential bidders;

5. EPE implemented a multi-stage bid evaluation and selection process which was described in the RFP document and included a conformance review of each proposal to ensure bidders provided the information requested, threshold evaluation, economic evaluation, non-economic evaluation, short-list ranking and selection based on the levelized cost of energy ("LCOE") for similar resources by resource category (i.e., solar, wind, and solar combined with storage), portfolio optimization, and contract negotiations;

6. The initial short-list selected by EPE was robust and contained multiple technology and transaction types submitted. The shortlist

included solar, wind, and solar plus storage projects and also included Power Purchase Agreements, Build Transfer Agreements, and a self-build option. However, the shortlist at this point did not contain any clear-cut reasonable options that would provide the solicited 150,000 MWh of RPS energy required at a reasonable price;

7. As outlined in the RFP, EPE clearly indicated to bidders that it would use a single-stage pricing process to encourage bidders to submit their "best" prices in their proposals. EPE sought to complete the evaluation and notification process within a very short timeframe for final selection of proposals by mid-March by requiring the final proposal(s) to submit interconnection applications for the spring 2024 cluster study process by March 29, 2024. However, as described in the IE report, the shortlist and final selection deadlines were delayed due to an extended evaluation period required for EPE to effectively complete the evaluation process. At the same time, EPE did communicate with bidders regarding the status of the evaluation and selection process and encouraged bidders to submit interconnection applications into the spring 2024 cluster study;

8. In addition, proposals selected were required to begin deliveries by no later than May 1, 2027. Many of the proposals submitted had not previously submitted an interconnection application and were just entering the interconnection process via the spring 2024 cluster study. This resulted in a limited number of proposals capable of meeting the established timeframe for required delivery

9. The 2023 Renewable Energy RFP for New Mexico was undertaken somewhat in parallel with the 2023 All Source RFP for Texas. While the New Mexico RFP was seeking RPS eligible renewable energy, the focus of the 2023 All Source RFP for Texas was primarily focused on the procurement of long-term capacity. EPE issued the All Source RFP for Texas to obtain long-term capacity of approximately 600 MW during the summer peak periods, beginning in the month of May through the end of September, in two tranches: (1) the first tranche is to help fulfill EPE's 300 MW capacity need in the 2025-2027 timeframe, with resources to be online and operational by May 1, 2025, but no later than May 1, 2027, and (2) the second tranche for an additional 300 MW to help fulfill EPE's capacity long-term needs by 2030, with resources to be online and operational by May 1, 2030. The 2023 Renewable Energy RFP for

New Mexico was issued over three weeks before the 2023 All Source RFP for Texas.

10. Because of the uncertainty associated with the timing for completing network upgrades and interconnection facilities in time to meet the proposed online date for projects proposed, EPE's System Planning and Interconnection Department ("SPI") conducted an internal assessment for the shortlisted projects to determine the expected timeline and cost for completing the necessary facilities to interconnect the projects to the EPE system based on knowledge of EPE system constraints. The results of the analysis were used to inform final selection results regarding the ability of the projects to secure the RPS energy prior to May 1, 2027 to meet RPS compliance requirements and to potentially eliminate proposals that would not likely achieve interconnection during the timeframe established in the RFPs. EPE also noted that evaluating a robust shortlist of projects could cause delays for undertaking the PLEXOS analysis. The analysis concluded that the DESRI Santa Teresa project and another solar plus storage project were the most viable projects to meet an online date within the 2025-2027 window for New Mexico requirements. Both of these projects had executed Large Generator

Interconnection Agreements ("LGIA") in hand with near term in-service dates expected.

11. After SPI completed its analysis of short-listed proposals and recognizing the limited options for procuring the energy needs of New Mexico, EPE's project manager for the RFP process contacted DESRI to inquire if it would be possible to allocate a portion of the energy from the Santa Teresa project to New Mexico with the remaining capacity and energy contracted for the Texas system. DESRI provided updated pricing and also provided additional project sizes for portfolio optimization purposes. EPE had conducted initial portfolio assessments using the PLEXOS model to assess New Mexico and Texas needs and the Santa Teresa project and another solar plus storage project were selected as part of the least cost portfolios for both systems. EPE conducted a PLEXOS analysis with additional variations of the Santa Teresa proposal options with updated pricing. The PLEXOS model selected a single standalone solar bid of 50 MWac with a COD in 2026 from the New Mexico proposal options. EPE later selected the full DESRI Santa Teresa hybrid proposal option of 150 MWac solar with 150 MW of battery energy storage for the combined system needs. Of the 150 MW of solar, 50 MWac would be allocated to New Mexico and 100

MWac of solar would be allocated to Texas and the full battery capacity of 150 MW would be allocated to Texas to help meet Tranche 1 capacity requirements.

12. The contract price for the 50 MWac with Santa Teresa was a very competitive price which was lowered from the original proposal price. The contract price was among the lowest priced options submitted and is much lower than the pricing we are seeing in other southwest and western markets for solar projects. Through EPE's negotiation with DESRI to share the components of the Santa Teresa project between New Mexico and Texas, EPE was able to minimize the cost of renewable energy and avoid the possibility of either procuring more energy than is required or procuring renewable energy plus storage that may be more costly than required;

13. In the IE's view, the 2023 Renewable Energy RFP for New Mexico process was a fair, transparent, and comprehensive process with every eligible proposal scrutinized thoroughly through EPE's evaluation process. The implementation of the solicitation process was effectively and creatively managed by EPE to secure a resource that matched New Mexico's needs which should provide economic benefits for New Mexico customers, relative to the alternatives available. While EPE did deviate from its intended process on a few

occasions, the IE concludes that such changes led to more positive results and reduction of costs overall.

V. CONCLUSION

Q14. DOES THIS CONCLUDE YOUR DIRECT TESTIMONY?

A. Yes, it does.

Wayne J. Oliver

Merrimack Energy
26 Shipway Place
Charlestown, Mass. 02129
(781) 856-0007
waynejoliver@aol.com

A Management Consultant/Economist with a diverse background in the energy field. Areas of expertise include power procurement and contracting, strategic planning, asset valuation, power project evaluation, energy supply/demand forecasting and planning, competitive fuels analysis, risk management, rate analysis and expert testimony, regional energy market analysis, and project economic and financial analysis. Focus on electric, gas and renewable resource industries. Provided expert testimony at the Federal Energy Regulatory Commission, National Energy Board of Canada, and in over 10 states and Canadian Provinces in nearly 50 proceedings.

PROFESSIONAL EMPLOYMENT

2000-present	**Merrimack Energy Group,** President
1988-2000	**Reed Consulting Group/Navigant Consulting, Inc.** Managing Director/Senior Vice President/Founder of Reed
1999	**Babson College**, Adjunct Professor, Finance Department
1984-1988	**R.J. Rudden Associates, Inc.** Senior Consultant
1983-1984	**Massachusetts Executive Office of Energy Resources** Consultant
1981-1983	**Algonquin Gas Transmission Company** Corporate Planner
1980-1981	**Massachusetts Executive Office of Energy Resources -- Analysis and Regulations Program** Assistant Director
1978-1980	**New England Regional Commission -- Energy Policy Analysis Program** Energy Program Coordinator/Senior Economist

PROFESSIONAL EXPERIENCE

Power Procurement/Competitive Bidding

Served as Independent Evaluator or Independent Consultant for over 125 competitive procurement assignments on behalf of utilities, regulatory agencies and public organizations for a range of resource options and contract structures. As Independent Evaluator responsible to ensure the competitive procurement process is undertaken in a fair and unbiased manner. Also, assisted a number of utilities in the development and implementation of competitive bidding processes and associated RFPs for long-term supply-side resources, renewable resources, option contracts, distributed resources and demand-side resources. Evaluated hundreds of power supply proposals for a wide range of power generation technology options and contract structures.

Directed a major study for a large electric utility involving the development of a viability methodology for assessing non-utility generation projects based on the use of Critical Path methodology.

Independent Evaluator or Independent Monitor for a number of power solicitation or competitive bidding processes including: Entergy Services, Inc., Southern California Edison, Pacific Gas & Electric, San Diego Gas & Electric Company, NV Energy, PacifiCorp, Arizona Public Service Company, Avista Utilities, Delmarva Power, El Paso Electric, Entergy Arkansas, Entergy Texas, Entergy Louisiana, Baltimore Gas and Electric, Duke Power, Hydro-Quebec (Baseload and Dispatchable Supply, Wind, Biomass, Cogeneration, and several Short-Term Call for Tenders), Portland General Electric, BC Hydro, Central and SouthWest Services (five separate RFPs), Commonwealth Edison, Public Service Company of Oklahoma and Southwestern Electric Power Company RFPs for power supplies.

Assisted Hawaiian Electric with the company's policy associated with the design of competitive bidding rules in Hawaii. Testified for four days on industry practices associated with competitive procurement processes.

Assisted several utilities with the development of an evaluation methodology and contract terms for RFP's for Power Options. Managed the development of an options pricing model to evaluate bids received.

Renewable Resources

Developed renewable resource RFPs and assisted in bid evaluation for Hydro-Quebec Distribution (4000 MW Wind and 100 MW Biomass), Avista Utilities, Massachusetts Technology Collaborative, Portland General Electric (wind, geothermal, and biomass proposals), Central Power & Light Company (wind only RFP), Public Service Company of Oklahoma, Southwestern Electric Power Company, West Texas Utilities, and Hawaiian Electric Company. Served as Independent Evaluator for several renewable resource solicitations including Pacific Gas & Electric, Southern California Edison, NV Energy, Entergy Arkansas, Entergy Texas, Arizona Public Service, and PacifiCorp.

Chaired two major conferences on green pricing initiatives and renewable resource development

Asset Valuation

Conducted due diligence analysis for several banks regarding the potential financing for merchant power projects, gas storage projects, and gas pipeline assets.

Conducted asset valuation analysis for utilities and power generators interested in acquiring power generation assets. Analysis included valuation of gas-fired combined cycle and CTs, coal projects, hydroelectric facilities, power contracts, pipeline capacity commitments, and electric transmission assets.

Competitive Energy Pricing

Negotiated several special contracts with unique pricing arrangements between utilities and customers.

Developed a market price evaluation methodology and pricing process for a large electric utility for wholesale and retail marketing initiatives.

Risk Management

Conducted seminars for utilities on the use of risk management techniques and financial derivatives to hedge risks, including the use of options, futures and swaps. Applied financial option techniques in the development of physical option arrangements.

Developed a risk management strategy for a major electric utility to hedge its fuel and power trading price risk.

Fuel Supply Acquisition Strategy and Procurement
Completed gas procurement strategies and portfolio designs for several electric utilities. Responsibilities included evaluating pipeline and storage options, developing a procurement strategy, and recommending a course of action. The projects involved integrating the production cost and operations of the generation units with gas supply and transportation contracting considerations to develop a least cost strategy.

Energy Market and Economic Policy Studies
Conducted a number of studies for utility and non-utility clients on the market for power in various regions of the US and in Canada.

Conducted several market studies and power price forecasts in support of due diligence efforts for acquisition of power generation assets.

Utility Restructuring
Advised senior management of electric utilities on evaluating and developing strategies for enhancing the value of the utility's assets. Also assisted several utilities in the development of GENCO strategies.

Strategic Planning and Analysis
Completed a strategic planning study for a major electric utility assessing the opportunities for the company in the changing natural gas market, including fuel purchasing strategies, and gas fired cogeneration and combined cycle opportunities.

Forecasting and Modeling
Developed integrated planning and forecasting system for a small electric utility. The system was comprised of production cost, generation planning, cost of service, demand forecasting and rate design modules.

Managed a number of projects and utilized several production cost and generation expansion models for evaluation of power supply proposals and resource options.

Financial Analysis
Assisted several utilities in the financial analysis of distributed resources for the purposes of establishing a DG business unit.

Assisted in the preparation of financial and economic feasibility studies of power generation projects for a consortium of banks.

Prepared several financial prefeasibility studies of proposed power generation projects for utilities, independent power producers and industrials.

EDUCATION
Northeastern University, Completed Doctoral Course work, Economics, 1977
Northeastern University, M.A., 1976
Assumption College, B.A., 1973

OTHER
Past Chairman, Massachusetts Natural Gas Task Force.

Adjunct Professor, Department of Finance, Babson College; Courses taught include Risk Management (MBA Program), Options and Futures

Instructor/Lecturer, Department of Economics, Northeastern University; Courses taught include Energy Economics, Statistics, International Economics, and Principles of Economics.

**Competitive Procurement Experience of Merrimack Energy Group, Inc.
Including Role as Independent Evaluator ("IE) or Independent Monitor ("IM")**

Bidding Process	Role	Client	Resources Solicited	Timeframe
Pacific Gas & Electric Company (PG&E) Long Lead-Time Request for Offers	IE	PG&E	200 MW of Long Duration Energy Storage and 200 MW of Firm Zero Emissions Renewable Resources	2024-2025
Arizona Public Service Company (APS) Customer-Sited Microgrid RFP – Engineering, Procurement, Construction and Services	IM	APS	Up to 200 MW	2024
Public Service Company of New Mexico (PNM) 2029-2032 Generation Resources RFP	IM	PNM and New Mexico Public Regulation Commission	Up to nearly 3,000 MW by 2032	2024-2025
Southern California Edison Company (SCE) Quarterly Resource Adequacy RFOs	IE	SCE	Quarterly solicitations to contract for Resource Adequacy (RA)	2024
Entergy Louisiana 3 GW Alternative Market-Based Mechanism Process Request for Proposals for Solar Photovoltaic Resources for Entergy Louisiana	IM	Entergy Louisiana	3,000 MW over four solicitations	2024-2025
Jacksonville Electric Authority (JEA) Market Test RFP for Large Scale Natural Gas Resources	IE	JEA	525 – 700 MW	2024-2025
Entergy Louisiana 2024 Request for Proposals for Energy and Capacity from Existing Generation Resources	IM	Entergy Louisiana	Up to 2,000 MW	2024
PG&E Helms Long Duration Storage Uprate Project	IE	PG&E	PG&E submitted Application to the CPUC seeking approval to expand	2024

**Competitive Procurement Experience of Merrimack Energy Group, Inc.
Including Role as Independent Evaluator ("IE) or Independent Monitor ("IM")**

			PG&E's existing Helms Pumped Storage Project. Merrimack Energy submitted report on the evaluation process and evaluation results and also presented benchmark costs in comparison to the capital costs required by PG&E	
Southwestern Electric Power Company (SWEPCO) 2024 All Source RFP	IM	SWEPCO	Seeking 2,100 MW of capacity in SPP through three RFPs (PPA, PSA, CPA).	2023-2024
El Paso Electric 2023 All Source RFP for Electric Power Supply and Load Management for Texas	Independent Evaluator	El Paso Electric	RFP sought 300 MW of long-term capacity between May 1, 2025 and May 1, 2027 and an additional 300 MW by May 1, 2030.	2023-2024
El Paso Electric 2023 RFP for Renewable Energy for New Mexico	Independent Evaluator	El Paso Electric	Seeks 150,000 MWh of RPS eligible renewable energy per year beginning on May 1, 2025 but no later than May 1, 2027.	2023-2024
Northern WASCO County PUD (Oregon) Request for Information	Consultant	NWCPUD	Seeking to procure Carbon Free Energy resources to serve existing and growing demand for deliveries of energy between January 1, 2025 and no later than January 1, 2030. Looking for 8,760 hours of a firm, flat energy profile	2023
Hydro-Quebec Preparation of Updated	Consultant	Hydro-Quebec	Merrimack Energy updated its	2023

**Competitive Procurement Experience of Merrimack Energy Group, Inc.
Including Role as Independent Evaluator ("IE) or Independent Monitor ("IM")**

Benchmark Study for Wind Resources for Purposes of Comparing the Benchmarks Against the Pricing of Wind Generated Electricity Submitted into Hydro-Quebec's 2023 Wind Call for Tenders			benchmark cost data for wind generated electricity in the Northeast US and eastern Canadian Markets and provided a comparison of the costs for wind power selected by Hydro-Quebec from its 2023 Wind Call for Tenders Relative to the Wind Project Benchmarks	
PG&E 2023 Central Procurement Entity	Independent Evaluator	PG&E	Procurement of Local Resource Adequacy to meet 100% of Local RA requirements for 2024 and 2025 and 50% for 2026	2023
SCE Request for Offers for 2023 Shepherds Flat Wind Offtake Agreement	Independent Evaluator	Southern California Edison (SCE)	SCE solicited offers from offtakers for intermittent wind and associated transmission capacity for from the Shepherds Flat Wind Project	2023
APS 2023 All Source RFP	Independent Monitor	Arizona Public Service Company	RFP seeks proposals for approximately 1,000 MW to 1,500 MW of resources, including at least 700 MW of renewable resources through PPAs, Build Transfer Agreements as well as EPC contracts for thermal generation	2023

**Competitive Procurement Experience of Merrimack Energy Group, Inc.
Including Role as Independent Evaluator ("IE) or Independent Monitor ("IM")**

			resources to be constructed on existing APS sites.	
Southern California Edison 2022 Catalina Island Clean Energy All-Source Request for Offers ("RFO")	Independent Evaluator	SCE	SCE is seeking third-party contracts to meet the full load of Catalina Island using renewable resources, storage, or demand response options	2022-2023
PG&E Mid-Term Reliability Request for Offers – Phase 3	Independent Evaluator	PG&E	Procurement of a total of 2,301 MW for delivery in 2023-2028, including procurement of long lead-time resources	2023
Entergy Texas 2022 Renewable RFP	Independent Monitor	Entergy Services	RFP seeks up to 2,000 MW of Solar PV or wind resources under a PPA or Build Own Transfer Option; Self-build market test option also expected	2022-2023
Hydro-Quebec Renewable Resource Benchmark Study 2022	Consultant	Hydro-Quebec	Retained by Hydro-Quebec to prepared a detailed benchmark study on a wide range of renewable resources based on project costs in the Northeast US and eastern Canadian Markets	2022-2023
Entergy Mississippi 2022 Fall RFP for Renewable Resources for Mississippi	Independent Monitor	Entergy Services	RFP seeks up to 500 MW of Solar PV or wind resources under a PPA or Build Own Transfer Option; Self-build market test option also expected	2022-2023
APS 2022 All Source RFP	Independent Monitor	Arizona Public Service	RFP seeks proposals for approximately	2022

**Competitive Procurement Experience of Merrimack Energy Group, Inc.
Including Role as Independent Evaluator ("IE) or Independent Monitor ("IM")**

		Company	1,000 MW to 1,500 MW of resources, including up to 600 to 800 MW of renewable resources	
PacifiCorp 2022 All-Source RFP	Independent Evaluator	Utah Public Service Commission	RFP seeks 1,345 MW of new supply-side wind and solar generation resources and 600 MW of collocated energy storage resources and 274 MW of demand-side resources.	2022 – 2023
Southern California Edison Q1 2022 Import Energy and RA eSolicitation	Independent Evaluator	SCE	RFO for System Capacity resources for 2022	2022
Arizona Public Service Company 2022 Solar Communities Program	Independent Monitor	APS	Spending of up to $20 to $30 million for residential rooftop program for limited and moderate income	2022
Entergy Louisiana 2022	Independent Monitor	Entergy Services	RFP seeks up to 1,500 MW of Solar PV or wind resources	2022-2023
PG&E Mid-Term Reliability Request for Offers – Phase 2	Independent Evaluator	PG&E	Procurement of at least 700 MW for 2025 and 2026 to meet CPUC requirement for PG&E to procure a total of 2,301 MW for delivery in 2023-2026	2022
PG&E 2022 Central Procurement Entity	Independent Evaluator	PG&E	Procurement of Local Resource Adequacy to meet 100% of Local RA requirements for 2023 and 2024 and 50% for 2025	2022
Entergy Mississippi	Independent Monitor	Entergy Services	Up to 500 MW of solar PV or wind	2022

**Competitive Procurement Experience of Merrimack Energy Group, Inc.
Including Role as Independent Evaluator ("IE) or Independent Monitor ("IM")**

			resources through PPA or BOT options	
Pacific Gas & Electric 2021 Clean Substation Microgrid Pilot	Independent Evaluator	PG&E	Variable load up to 8.5 MW	2022
2023 Demand Response Auction Mechanism (DRAM 8)	Independent Evaluator	SCE; PG&E; and SDG&E	RFOs were issued by all three California utilities based on spending targets determined for each utility by the CPUC.	2022
Arizona Public Service Company Residential Take Charge Arizona (L2 EV Chargers)	Independent Monitor	APS	APS seeks proposals to install 300 L2 EV chargers by the end of 2022 at participating customer residential addresses	2022
Pacific Gas & Electric Mid-Term Reliability Request for Offers – Phase 1	Independent Evaluator	PG&E	Solicitation for over 1,600 MW for 2023 and 2024 of eligible system resource adequacy in response to CPUC Rulemaking 20-05-003 via an All Source Solicitation Process	2021-2022
Southern California Edison 2021 Reliability Utility Owned Energy Storage RFI and RFP	Independent Evaluator	SCE	Seeking Design, Build, Transfer (DBT) contract for the construction of Battery Energy Storage Projects to be sited at SCE owned sub-station sites for up to 712.5 MW by 8/1/2022	2021
Entergy Texas 2021 RFP for Solar PV Resources	Independent Monitor	Entergy Texas	Up to 400 MW of capacity including 200 MW from PPAs and 200 MW from Build, Own, Transfer ("BOT") transactions, with an option for BESS for	2021-2022

**Competitive Procurement Experience of Merrimack Energy Group, Inc.
Including Role as Independent Evaluator ("IE) or Independent Monitor ("IM")**

			BOT options	
Entergy Arkansas 2021 RFP for Renewable Resources	Independent Monitor	Entergy Arkansas	Seeks 500 MW of capacity and energy from eligible renewable energy resources with option for BESS capacity	2021-2022
El Paso Electric 2021 All Source RFP for Electric Power Supply and Load Management for Texas	Independent Evaluator	El Paso Electric	RFP sought resources to meet a short-term capacity need of 100-125 MW between 2023-2024 and long-term capacity resources of an additional 75-100 MW on line by May 1, 2025	2021-2022
El Paso Electric 2021 All Source RFP for Electric Power Supply and Load Management Resources for New Mexico	Independent Evaluator	El Paso Electric	Seeks up to 110 MW of long-term capacity by May 2025 and 175,000 MWh of renewable energy to meet RPS requirements in New Mexico Merrimack Energy submitted testimony on the RFP process	2021-2022
Arizona Public Service Company 2021 Distributed Demand-Side Resources (DDSR) RFP - 2021	Independent Monitor	Arizona Public Service Company	RFP to acquire resources (capacity, demand reduction, load shifting, locational value, voltage support, ancillary and grid services) through the RFP to help inform the design of a DDSR tariff	2021
Entergy Louisiana 2021 RFP for Solar PV Resources	Independent Monitor	Entergy Louisiana	Seeks up to 600 MW of solar PV capacity and energy via PPA or BOT contract structures with options for	2021-2022

**Competitive Procurement Experience of Merrimack Energy Group, Inc.
Including Role as Independent Evaluator ("IE) or Independent Monitor ("IM")**

			BESS capacity	
Southern California Edison – 2021 Q1 – Q3 RA eSolicitations	Independent Evaluator	Southern California Edison	Seeking offers to buy, sell, or swap RA capacity to meeting month-ahead and year-ahead compliance showings for 2021-2022	2021
2022 Demand Response Auction Mechanism (DRAM 7)	Independent Evaluator	SCE; PG&E; and SDG&E	RFOs were issued by all three California utilities based on spending targets determined for each utility by the CPUC.	2021
Arizona Public Service Company 2020 Battery Energy Storage RFP	Independent Monitor	Arizona Public Service	Proposals for EPC services for 60 MW, 4-hour duration BESS at APS-owned Solar PV sites	2021
Pacific Gas & Electric Company Central Procurement Entity Local RA Solicitation	Independent Evaluator	PG&E	Solicitation based on Central Procurement function for PG&E based on CPUC Decision 20-06-002	2021
Pacific Gas & Electric Company 2020 System Reliability Request for Offers – Phase 2 Solicitation under California Public Utility Commission Procurement Order for All Source Solicitation	Independent Evaluator	Pacific Gas & Electric Company	Incremental procurement of system level qualifying Resource Adequacy capacity in the amount of 342 MW to come on line by August 1, 2023.	2020
Massachusetts Utilities Request for Proposals for Long-Term Contracts For Offshore Wind Energy Projects	Independent Evaluator Team	Massachusetts Department of Energy Resources	RFP is seeking up to 1,600 MW of Offshore Wind resources	2021-2022
PacifiCorp 2020 All Source Request for Proposals	Independent Evaluator	Public Service Commission of Utah	Procurement of 1,823 MW of new solar resources co-located with 595 MW of new battery energy storage	2020 - 2021

**Competitive Procurement Experience of Merrimack Energy Group, Inc.
Including Role as Independent Evaluator ("IE) or Independent Monitor ("IM")**

			system capacity and 1,920 MW of new wind resources based on 2019 IRP Preferred Plan	
2020 Request for Proposals for Solar Photovoltaic Resources for Entergy Louisiana, LLC	Independent Monitor	Entergy Louisiana	Seeking to acquire up to 250 MW of solar PV resources via a PPA or BOT agreement	2020-2021
2021 Demand Response Auction Mechanism (DRAM 6)	Independent Evaluator	SCE; PG&E; and SDG&E	RFOs were issued by all three California utilities based on spending targets determined for each utility by the CPUC.	2020
Arizona Public Service Company Demand Response RFP	Independent Monitor	APS	Seeking up to 75 MW of DR Capacity to be achieved through dispatchable load reduction from APS commercial and industrial customers.	2020
Pacific Gas & Electric Company 2020 System Reliability Request for Offers – Phase 1 Solicitation under California Public Utility Commission Procurement Order for All Source Solicitation	Independent Evaluator	Pacific Gas & Electric Company	Incremental procurement of system level qualifying Resource Adequacy capacity in the amount of 716.9 MW to come on line between August 1, 2021 and August 1, 2023	2020
Pacific Gas & Electric Company Biomethane Request for Offers in Support of the 2019 System Reliability RFO Distributed Generation Enabled Microgrid Services Phase	Independent Evaluator	Pacific Gas & Electric Company	Solicit offers from bidders to procure incremental biomethane to be used a fuel to procure electricity in the event that a project executed from the DGEMS RFO requires methane as a fuel to produce electricity.	2020

**Competitive Procurement Experience of Merrimack Energy Group, Inc.
Including Role as Independent Evaluator ("IE) or Independent Monitor ("IM")**

Entergy Texas 2020 RFP for Combined-Cycle Gas Turbine Capacity and Energy Resources	Independent Monitor	Entergy Texas	ETI is seeking to acquire 1,000 to 1,200 MW of capacity and energy via a PPA or BOT option	2020-2021
Southern California Edison 2020 Distribution Investment Deferral Framework RFO	Independent Evaluator	Southern California Edison	Through this RFO, SCE's goal is to defer specific traditional distribution projects within SCE's service area with procurement of distributed energy resources ("DERs")	2020
SCE 2020-2024 Resource Adequacy (RA) Capacity, RA with Limited Energy Toll or CHP PPA, and Import Capability Transfers Request for Offers (RFO)	Independent Evaluator	Southern California Edison	Through this RFO, SCE seeks to purchase RA capacity for delivery periods starting August 1, 2020 to December 31, 2024 from eligible supply sources. SCE also seeks to sell RA capacity for delivery period beginning April 1 to June 30 2020.	2020
Pacific Gas & Electric 2019 System Reliability Request for Offers for Distributed Generation Enabled Microgrid Services Phase	Independent Evaluator	Pacific Gas & Electric Company	Procure energy resources to provide Distributed Generation Enabled Microgrid Services (DGEMS) for PG&E to minimize impacts on customers from Public Safety Power Shutoff events.	2019-2020
SCE 2020 Caithness Shepherds Flat Wind Energy Project Energy Offtake	Independent Evaluator	Southern California Edison	Sale of 845 MW of WSPP Schedule C Firm Energy with BPA Reserves and Associated Transmission	2019-2020

**Competitive Procurement Experience of Merrimack Energy Group, Inc.
Including Role as Independent Evaluator ("IE) or Independent Monitor ("IM")**

			Capacity	
2020 Demand Response Auction Mechanism (DRAM 5)	Independent Evaluator	SCE; PG&E; and SDG&E	RFPs were issued by all three California utilities based on spending targets determined for each utility by the CPUC.	2019-2020
Arizona Public Service Company 2019 RFP for Wind Generation Resources	Independent Monitor	Arizona Public Service Company	APS is seeking proposals for up to 250 MW of wind generation	2019-2020
El Paso Electric Company 2019 Request for Proposals for Renewable Energy for New Mexico.	Independent Evaluator	El Paso Electric Company	EPE is seeking approximately 141,000 MWh of renewable energy per year beginning in 2020 to meet RPS requirements in New Mexico under SB489.	2019-2020
Arizona Public Service Company RFP for Non-Residential Photovoltaic (PV) System Installations Under the APS Solar Communities Program	Independent Monitor	Arizona Public Service Company	Through this RFP, APS is seeking the services of suppliers (Installers) to design and install solar PV systems at select project sites. APS has received approval from the Commission ("ACC") to own, operate and maintain the PV solar generation connected to the distribution system located on non-residential sites in APS service territory.	2019
Entergy Texas 2019 Request for Proposals for Solar PV Resources	Independent Monitor	Entergy Texas	ETI seeks to procure up to 100 MW of solar PV generation under an asset acquisition structured as a Build, Own,	2019

**Competitive Procurement Experience of Merrimack Energy Group, Inc.
Including Role as Independent Evaluator ("IE) or Independent Monitor ("IM")**

			Transfer (BOT) and up to an additional 100 MW under a Power Purchase Agreement (PPA) to be in service no later than December 31, 2023.	
Entergy Arkansas 2019 Request for Proposals for Solar PV Resources	Independent Monitor	Entergy Arkansas	Through this RFP, EAL seeks to acquire, under a Build Own Transfer (BOT) transaction structure up to 200 MW (AC) of solar PV generation resources for service commencing by December 31, 2022.	2019
Massachusetts Utilities Request for Proposals for Long-Term Contracts For Offshore Wind Energy Projects	Independent Evaluator Team	Massachusetts Department of Energy Resources	RFP is seeking up to 1,600 MW of Offshore Wind resources	2019-2020
NV Energy Fall 2018 Renewable Energy Request for Proposals Including Dispatchable Energy	Independent Evaluator	NV Energy	Up to 350 MW of Long-Term Dispatchable Renewable Energy Resources	2018-2019
Hawaiian Electric Company Energy Development of Battery Energy Storage RFPs for Oahu and Maui	Consultant	Hawaiian Electric Company	Stand-alone Battery Energy Storage projects	2018
Southern California Edison Company 2018 Aliso Canyon 2 Energy Storage RFO	Independent Evaluator	Southern California Edison Company	20 MW Energy Storage solicitation	2018-2019
Southern California Edison Company 2019 RA RFO	Independent Evaluator	Southern California Edison Company	Resource Adequacy Products to Meet Year-Ahead Capacity Requirements	2018
APS 2018 Battery Storage RFP	Independent Monitor	Arizona Public Service Company	APS is seeking proposals for EPC contracts for battery energy storage	2018

**Competitive Procurement Experience of Merrimack Energy Group, Inc.
Including Role as Independent Evaluator ("IE) or Independent Monitor ("IM")**

			systems to be integrated with existing APS-owned Solar PV facilities. Through the RFP, APS is seeking over 100 MW of BESS capacity.	
APS 2018 Forest Bioenergy Resources RFP	Independent Monitor	Arizona Public Service Company	RFP seeks up to 60 MW of capacity from forest bioenergy resources	2018
SCE CR-RAM	Independent Evaluator	Southern California Edison	RFOs for Renewable Energy from generating facilities that qualify as Community Renewable or Community Renewable Environmental Justice Projects	2016-2018
San Diego Gas & Electric 2019 Local RA RFP	Independent Evaluator	San Diego Gas & Electric	SDG&E seeks to purchase 2019 Local RA capacity product to assist in optimizing its 2019 RA portfolio.	2018
Pacific Gas & Electric Company Local Sub-Area Energy Storage RFO	Independent Evaluator	Pacific Gas & Electric	Through this RFO, PG&E solicited offers for storage resources through 3rd party arrangements, EPC agreement at its Moss Landing sub-station site and BOT agreements in the local sub-area. PG&E executed 4 contracts for 567 MW of storage capacity.	2018
NV Energy 2018 Renewable Energy Request for Proposals	Independent Evaluator	NV Energy	RFP sought up to 330 MW of renewable resources. Nevada Power and Sierra Pacific	2018

**Competitive Procurement Experience of Merrimack Energy Group, Inc.
Including Role as Independent Evaluator ("IE) or Independent Monitor ("IM")**

			contracted for approximately 1,000 MW of Solar PV from 6 projects, including 3 projects which included a total of 100 MW of Battery Energy Storage.	
2019 Demand Response Auction Mechanism (DRAM 4)	Independent Evaluator	SCE; PG&E; and SDG&E	RFPs were issued by all three California utilities based on spending targets determined for each utility by the CPUC.	2018
Entergy Arkansas 2017 Request for Proposals for Build-Own-Transfer Solar PV Resources	Independent Monitor	Entergy Arkansas	The RFP is seeking up to 200 MW of new build Solar PV generation resources to be owned by Entergy Arkansas	2017 - 2018
Arizona Public Service Company – APS Solar Communities Residential Rooftop Solar Program	Independent Monitor	Arizona Public Service Company	APS seeking proposals from rooftop Solar PV Installers to install residential Solar PV systems for limited and moderate income customers	2017-2018
PacifiCorp 2017 Renewable Energy Request for Proposals (2017R RFP)	Independent Evaluator	Utah Public Service Commission	The RFP is seeking up to 1,270 MW of Wind Resources that can achieve a commercial operation date of no later than December 31, 2020. Request for wind generation is integrated with plans to construct a new transmission facility in Wyoming	2017- 2018
El Paso Electric 2017 All Source Request for Proposals For Electric Power Supply and Load Management Resources.	Independent Evaluator	El Paso Electric Company	All Source RFP (including conventional generation, renewable resources,	2017- 2018

**Competitive Procurement Experience of Merrimack Energy Group, Inc.
Including Role as Independent Evaluator ("IE) or Independent Monitor ("IM")**

			demand management, energy storage, and distributed resources) for up to 370 MW of summer peak requirements.	
Arizona Public Service Company EPC RFP for Distribution Energy Storage System for Punkin Center	Independent Monitor	Arizona Public Service Company	EPC contract for a 2 MW Battery Storage project at an APS Distribution site	2017
Massachusetts Utilities Request for Proposals for Long-Term Contracts For Offshore Wind Energy Projects	Independent Evaluator Team	Massachusetts Department of Energy Resources	RFP is seeking up to 1,600 MW of Offshore Wind resources	2017-2018
Massachusetts Utilities Request for Proposals for Long-Term Contracts For Renewable Energy Projects	Independent Evaluator Team	Massachusetts Department of Energy Resources	Request for Proposals For Long-Term Contracts For Clean Energy Projects For 9,450,000 MWh.	2017-2018
Southern California Edison Company Goleta Area RFO for Distributed Energy Resources	Independent Evaluator	Southern California Edison	RFO soliciting offers for third-party distributed resources to meet possible N-2 reliability conditions in the Goleta/Santa Barbara area	2016-2017
Southern California Edison Company Aliso Canyon Energy Storage RFO; Design, Build, Transfer RFP; bilateral storage contract to enhance existing SCE peaking plants	Independent Evaluator	Southern California Edison	RFO solicited RA offers for third-party Energy Storage contracts. SCE also issued Design, Build, Transfer RFP for which Sellers could provide a turnkey solution at SCE designated substation sites.	2016
San Diego Gas & Electric Company 2007 Resource Adequacy RFP	Independent Evaluator	San Diego Gas & Electric Company	Bids and Offers to Buy RA capacity for 2017 including local, system and import capacity	2016
NV Energy 2016	Independent	NV Energy	NV Energy seeking	2016

**Competitive Procurement Experience of Merrimack Energy Group, Inc.
Including Role as Independent Evaluator ("IE) or Independent Monitor ("IM")**

Emission Reduction and Capacity Replacement Renewable Energy RFP, March 2016	Evaluator		100 MW PPA for third-party ownership and 35 MW Asset Purchase or Turnkey option to be owned by NV Energy. NV Energy also offered a site to potential Bidders	
Pacific Gas & Electric Company 2016 Energy Storage Request for Offers	Independent Evaluator	Pacific Gas & Electric Company	PG&E is seeking at least 120 MW of storage projects including both transmission and distribution connected projects. PG&E could acquire the output from the project via an ESA or own the project via a PSA.	2016-2017
SCE 2015 RPS Renewable RFP	Independent Evaluator	Southern California Edison	RFO for renewable resources to meet RPS requirements, including all the electric energy, capacity, RA benefits and Green Attributes.	2016
Arizona Public Service Company 2016 All Source Request for Proposals (RFP)	Independent Monitor	Arizona Public Service Company	All Source RFP for 400 to 600 MW. Eligible resources include: New or existing thermal project Tolling or acquisition options, PPA for Renewable resources, Energy Storage, combined storage and renewable, Demand Response and Energy Efficiency resources	2016
California Investor-Owned Utilities Demand Response Auction	Independent Evaluator	PG&E; SCE; SDG&E	Demand Response Resources – 3 Auction Pilots for	2015 - 2017

**Competitive Procurement Experience of Merrimack Energy Group, Inc.
Including Role as Independent Evaluator ("IE) or Independent Monitor ("IM")**

Mechanism (DRAM 1, 2 and 3) Request for Offers			over 200 MW of Demand Response Resources for all three IOUs	
San Diego Gas & Electric Company RFO for 2016 Resource Adequacy (RA Capacity)	Independent Evaluator	San Diego Gas & Electric Company	Resource Adequacy (RA Capacity) for 2016 capacity requirements	2015
Arizona Public Service Company Solar Partners Program Battery Energy Storage System RFP	Independent Monitor	Arizona Public Service Company	Energy Storage Projects at APS sites to support Solar programs	2015
Arizona Public Service Company 2015 Request for Proposals for the Marine Corps Air Station Yuma (MCASY) MicroGrid Project	Independent Monitor	Arizona Public Service Company	Micro-Grid project at Marine Air Base	2015
Entergy Services – Request for Proposals for Long-Term Combined Cycle Gas Turbine Developmental Capacity and Energy Resources – West of Atchafalaya Basin Region (WOTAB)	Independent Monitor – Louisiana Market Based Mechanism	Entergy Services, Inc.	Long Term RFP for Developmental Resources – 800 to 1000 MW from new Gas-fired Combined Cycle units for Entergy Louisiana	2015-2016
Entergy Services – Entergy Texas – Long-Term Combined Cycle Gas Turbine Capacity and Energy Resources and Limited Term Capacity and Energy Resources	Independent Monitor	Entergy Services, Inc.	Long Term RFP for Developmental Resources – 800 to 1000 MW from new Gas-fired Combined Cycle units and up to 700 MW of PPA and/or Tolling Products for Limited Term (3-5 years) Resources for Entergy Texas	2015-2016
SCE 2014 RPS Renewable RFP	Independent Evaluator	Southern California Edison	RFO for renewable resources to meet RPS requirements, including all the electric energy,	2014 - 2015

**Competitive Procurement Experience of Merrimack Energy Group, Inc.
Including Role as Independent Evaluator ("IE) or Independent Monitor ("IM")**

			capacity, RA benefits and Green Attributes.	
Hydro-Quebec Call for Tenders for 500 MW of Firm Capacity and Associated Energy	Independent Consultant	Hydro-Quebec Distribution	500 MW of Peaking capacity for 300 hours per year of operation. Call for Tenders requires 20 year contracts.	2014-2015
Arizona Public Service Company AZ Sun Rooftop Solar Program – Installer RFI (to qualify) and RFPs for 100 residential facility blocks	Independent Monitor	Arizona Public Service Company	Installation of up to 1,5000 PV systems on residential buildings to be owned by Arizona Public Service Company	2014 - 2015
Nevada Power Company 2014 and 2015 Request for Proposals for Renewable Energy	Independent Evaluator	Nevada Power Company	Each RFP is for 100 MW of renewable energy projects located in Nevada	2014 - 2015
Pacific Gas & Electric Company 2014 Energy Storage Request for Offers	Independent Evaluator	Pacific Gas & Electric Company	PG&E is seeking approximately 74 MW of storage projects including both transmission and distribution connected projects. PG&E could acquire the output from the project via an ESA or own the project via a PSA.	2014 -2015
Southern California Edison Request for Offers for Resource Adequacy and Purchases and Sale of RA Capacity	Independent Evaluator	Southern California Edison Company	The RA RFO is designed to meet SCE's year ahead RA procurement requirements	2014
San Diego Gas & Electric Company RFO for RA Capacity	Independent Evaluator	San Diego Gas & Electric Company	Resource Adequacy (RA Capacity)	2014
PG&E Solar PV Program – Power Purchase Agreements – 2014 RFO	Independent Evaluator	Pacific Gas & Electric Company	Up to 58 MW of small scale (up to 20 MW) PV capacity	2014
Hydro-Quebec Wind Generated Electricity Call for Tenders for 450 MW	Independent Consultant	Hydro-Quebec Distribution	450 MW of Wind generated electricity located in Quebec	2014
San Diego Gas & Electric	Independent	San Diego	Capacity Resources	2014

**Competitive Procurement Experience of Merrimack Energy Group, Inc.
Including Role as Independent Evaluator ("IE) or Independent Monitor ("IM")**

Company Bilateral Contract for 600 MW of Peaking Capacity	Evaluator	Gas & Electric Company	to meet Reliability Requirements in the Local Area	
Southern California Edison RFO for GHG Offset Credits	Independent Evaluator	Southern California Edison	Greenhouse Gas Emission Offset Credits	2014
Pacific Gas & Electric Company Third Solicitation for Combined Heat and Power Request for Offers	Independent Evaluator	Pacific Gas & Electric Company	Third of three Solicitations for Combined Heat and Power Facilities	2014
San Diego Gas & Electric Company RFP for RA Capacity	Independent Evaluator	San Diego Gas & Electric Company	Resource Adequacy (RA Capacity)	2014
Southern California Edison Company RFP for RPS Resources	Independent Evaluator	Southern California Edison	Renewable Energy Projects Qualifying under the Renewable Portfolio Standard in CA	2013/2014
Southern California Edison RFO for Resource Adequacy	Independent Evaluator	Southern California Edison	Resource Adequacy (RA Capacity)	2013
San Diego Gas & Electric Company	Independent Evaluator	San Diego Gas & Electric Company	Bilateral contract renegotiation for a 300 MW gas-fired combustion turbine facility	2013
Hawaiian Electric Company	Consultant	Hawaiian Electric Company	Assisting Hawaiian Electric Company with the development of a small renewable generation program	2013
Pacific Gas & Electric Company Second Solicitation for Combined Heat and Power Request for Offers	Independent Evaluator	Pacific Gas & Electric Company	Second of three Solicitations for Combined Heat and Power Facilities	2013
Southern California Edison 2012 RFO for Transmission Capacity	Independent Evaluator	Southern California Edison Company	Solicitation for the procurement of existing firm point-to-point transmission capacity from the Pacific Northwest to	2012

**Competitive Procurement Experience of Merrimack Energy Group, Inc.
Including Role as Independent Evaluator ("IE) or Independent Monitor ("IM")**

			California	
San Diego Gas & Electric – RFP for 2013 Resource Adequacy (RA) Capacity	Independent Evaluator	San Diego Gas & Electric Company	Resource Adequacy (Capacity only product) for 2013 RA requirements	2012
San Diego Gas & Electric - Bilateral Contract for RA Capacity for 2013	Independent Evaluator	San Diego Gas & Electric Company	Bilateral contract with NRG Power Marketing for the Encina Units	2012
Arizona Public Service Company Solar for Schools and Government Program	Served as program auditor to review program strengths and weaknesses and proposed recommendations for future solicitations	Arizona Public Service Company	Several solicitations for the construction of solar facilities on eligible schools	2012
Arizona Public Service Company Arizona Sun Program – RFP for Hyder II	Independent Monitor	Arizona Public Service Company	EPC Proposals to develop and construct a 14 MW solar PV project for APS ownership at an APS site	2012
Pacific Gas & Electric Company – 2012 Request for Offers – Solar PV Program – Power Purchase Agreements	Independent Evaluator	Pacific Gas & Electric Company	Up to 50 MW of Solar PV projects secured via a PPA – Year 2 of 5 year program	2012
SCE 2011 Combined Heat and Power Facilities Request for Offers	Independent Evaluator	Southern California Edison	First of three Solicitations for Combined Heat and Power Facilities	2011 – 2012
Pacific Gas & Electric Company First Solicitation for Combined Heat and Power Request for Offers	Independent Evaluator	Pacific Gas & Electric Company	First of three Solicitations for Combined Heat and Power Facilities – for up to 690 MW	2011 -2012
PacifiCorp All Source RFP for 2016 Resources	Independent Evaluator	Utah Public Service Commission	Solicitation for 600 MW of Capacity and Energy for 2016.	2011-2102

**Competitive Procurement Experience of Merrimack Energy Group, Inc.
Including Role as Independent Evaluator ("IE) or Independent Monitor ("IM")**

			Eligible products include EPC contract for a gas-fired combined cycle at a PacifiCorp site, PPAs, TSA, and APSA's at a Bidder site.	
El Paso Electric Company 2011 RFP for Electric Peaking Supply and Load Management Resources 2011-2012	Independent Evaluator	El Paso Electric Company	RFP for peaking resources for 2014-2016 for approximately 340-400 MW	2011 – 2012
Pacific Gas & Electric Company Request for Proposals for EPC Services for 250 MW of Utility-Owned Photovoltaic Program	Independent Evaluator	Pacific Gas & Electric Company	IE for three solicitations for EPC contractors to develop and construct utility-owned solar PV facilities at a PG&E site	2010-2012
Hawaiian Electric Company RFP for Renewable Firm Dispatchable Capacity Resources	Consultant	Hawaiian Electric Company	Lead consultant involved in the design and development of the RFP document, Bidder Response Package, PPA, and Asset Purchase and Sale Agreement for ownership of an asset by HECO.	2011 -2012
Hawaiian Electric Company RFP for Renewable Energy and Undersea Cable System Projects Delivered to the Island of Oahu	Consultant	Hawaiian Electric Company	Consultant associated with the development of an RFP for an undersea Electric Cable project.	2011 – 2012
El Paso Electric Company 2011 Request for Proposals for Solar Projects	Independent Evaluator	El Paso Electric Company	RFP soliciting bids for 1-2 MW solar facility to be built at company site. Utility will also offer a self-build option.	2011
Arizona Public Service Company 2011 RFP for Renewable Energy Small	Independent Monitor	Arizona Public Service Company	RFP for small scale renewable resources.	2011

**Competitive Procurement Experience of Merrimack Energy Group, Inc.
Including Role as Independent Evaluator ("IE) or Independent Monitor ("IM")**

Generation Resources				
El Paso Electric Company 2010 All Sources Request for Proposals for Electric Power Supply and Load Management Resources	Independent Evaluator	El Paso Electric Company	Supply-side and Demand-side resources based on PPA, EPE purchase of or equity participation in a bidder's new or existing resource. RFP is for up to 300 MW.	2010
Southern California Edison Company – RFO for Renewable Energy from Generating Facilities Not Greater than 20 MW.	Independent Evaluator	Southern California Edison	Eligible renewable resources for projects not greater than 20 MW located within the CAISO controlled grid. Total resources solicited – 250 MW.	2010
Pacific Gas and Electric Company Solar PV Program – RFPs for Utility-Owned Generation PV Solar Systems and RFO for PPAs for Solar PV projects	Independent Evaluator	Pacific Gas and Electric Company	RFP for utility-owned generation seeking up to 250 MW of Solar PV projects and RFO for PPA options seeking up to 250 MW of third-party Solar PV projects	2010
Pacific Gas and Electric Company Intermediate Term Request for Offers 2010	Independent Evaluator	Pacific Gas and Electric Company	RFO seeks System Resource Adequacy and Bay Area Local Resource Adequacy for the summer period 2011-2015.	2010
Hydro-Quebec Distribution Call for Tenders for Wind-Generated Electricity for a Total of 500 MW.	Independent Consultant	Hydro-Quebec Distribution	Call for Tenders is for 250 MW from Aboriginal Projects and 250 MW from Community Projects in blocks of 25 MW.	2010
Arizona Public Service Company 2010 Request for Proposals for Arizona Wind Generation Resources	Independent Monitor	Arizona Public Service Company	RFP seeking up to 100 MW of wind resources located in Arizona. Eligible options include PPAs and Build, Own, Transfer	2010

**Competitive Procurement Experience of Merrimack Energy Group, Inc.
Including Role as Independent Evaluator ("IE) or Independent Monitor ("IM")**

			options.	
Hawaiian Electric Company	Consultant	Hawaiian Electric Company	Development of a Feed-in Tariff program for renewable resources. Focused on development of queuing procedures for applicants to the program.	2009-2010
Southern California Edison 2010 Request for Offers from Independent Power Producers for the Solar Photovoltaic Program	Independent Evaluator	Southern California Edison	RFO seeks PPAs for up to 250 MW of primarily rooftop solar photovoltaic resources over a 5 year period	2009-2010
Hydro-Quebec Distribution 2009 Call for Tenders for Energy Produced by Biomass Cogeneration	Independent Consultant	Hydro-Quebec Distribution	Call for Tenders seeking 125 MW of Firm Capacity and Associated Energy from Biomass	2009
Avista Utilities 2009 Request for Proposals for Renewable Energy	Independent Evaluator	Avista Utilities	RFP designed to acquire renewable resources to meet the utility's IRP requirements of 150 MW.	2009
Massachusetts Utilities Long-Term Contracting Requirements for Renewable Resources under the Green Communities Act	Member of Consultant Team	Massachusetts Department of Energy Resources	RFP designed to solicit RPS eligible renewable resources for up to 2% of total retail load in Massachusetts.	2009-2010
Southern California Edison Company	Independent Evaluator	Southern California Edison	2009 RFP for all renewable resources that qualify for California RPS requirements	2009
Arizona Public Service Company 2009 Request for Proposals for Renewable Energy Small Generation Resources	Independent Monitor	Arizona Public Service Company	RFP for small scale renewable resources.	2009
Pacific Gas & Electric 2008 Intermediate Term RFO	Independent Evaluator	Pacific Gas & Electric	Local Resource Adequacy; Operationally Flexible Resources;	2008-2009

**Competitive Procurement Experience of Merrimack Energy Group, Inc.
Including Role as Independent Evaluator ("IE) or Independent Monitor ("IM")**

			QFs, and RPS energy	
El Paso Electric RFP for Electric Peaking Power Supply and Load Management Resources	Independent Evaluator	El Paso Electric Company	Peaking resources including either supply-side or demand-side resources	2008-2009
Arizona Public Service Company 2008 Request for Proposals for Distributed Energy Resources, August 2008.	Independent Monitor	Arizona Public Service Company	RFP for Distributed Energy Resources from renewables – 200,000 MWhs per year.	2008-2009
PacifiCorp Request for Proposals Renewable Electric Resources	Independent Evaluator	Utah Public Service Commission	RFP for Renewable Resources – 500 MW	2008
PacifiCorp 2008 All Source RFP	Independent Evaluator	Utah Public Service Commission	All Source RFP for resources in the 2012 to 2017 timeframe for up to 2000 MW	2008-2010
PacifiCorp Acquisition of the Chehalis Power Plant	Independent Evaluator	Utah Public Service Commission	Exemption from bidding rules to acquire 525 MW gas-fired combined cycle plant	2008
Public Service Company of Oklahoma Request for Proposals for Supply-Side Capacity and Energy Resources	Technical Consultant of Industry Practices	Public Service Company of Oklahoma	RFP for 450 to 600 MW of supply-side resources in the form of a PPA, APSA, or Tolling Services Agreement.	2008
Ontario Power Authority Renewable Resource Supply RFP (RES III)	Member of Fairness Advisor Team	Ontario Power Authority	RFP for up to 2000 MW of Renewable Resources	2008 to 2009
Oklahoma Gas and Electric Company Summer 2008-2010 Resources RFP	Independent Monitor	Oklahoma Corporation Commission	RFP for up to 500 MW of firm energy and associated capacity	2007
Pacific Gas and Electric Company 2007 Request for Offers to Meet Renewable Portfolio Standards	Independent Evaluator	Pacific Gas and Electric	2007 RPS RFO to meet 1-2% of retail load (750,000 to 1,500,000 MWh per year).	2007 to 2008
Hydro-Quebec Distribution Wind Energy Call for Tenders	Independent Technical Consultant	Hydro-Quebec Distribution	2000 MW Wind Resources Call for Tenders	2006 to 2008

**Competitive Procurement Experience of Merrimack Energy Group, Inc.
Including Role as Independent Evaluator ("IE) or Independent Monitor ("IM")**

Hawaiian Electric Company RFP for Renewable Energy Resources	Consultant	Hawaiian Electric Company	100 MW RFP for Renewable Resources to meet RPS requirements	2007 to 2008
PacifiCorp 2012 RFP for Baseload Resources	Independent Evaluator	Public Service Commission of Utah	RFP for up to 1,750 MW of Baseload capacity	2006 to 2008
Maui Electric Company	Consultant	Maui Electric	RFP for approximately 40 MW of peaking capacity	2007 to 2008
Delmarva Power and Light RFP for Supply Resources	Member of Independent Consultant team	Delaware Public Utilities Commission	RFP for up to 400 MW	2006 to 2007
Avista Utilities RFP for Renewable Resources	Consultant	Avista Utilities	RFP for 100 MW of renewable resources	2006
Public Service Company of Oklahoma 2005 RFP for Peaking and Baseload Resources	Independent Monitor	Public Service Company of Oklahoma	RFPs for Peaking and Baseload Resources – up to 600 MW of baseload capacity and 500 MW of peaking capacity.	2005 to 2007
Southwestern Electric Power Company RFP for Capacity and Energy Resources	Independent Monitor	Southwestern Electric Power Company	RFP for Peaking, Intermediate and Baseload Resources – up to 1,500 MW of capacity and associated energy.	2005 to 2008
Hydro-Quebec Distribution Cogeneration Call for Tenders	Independent Technical Consultant	Hydro-Quebec Distribution	Call for Tenders for 350 MW of capacity from Cogeneration projects	2005
Ontario Power Authority	Member of Fairness Advisor Team	Ontario Power Authority	RFPs for Demand Response Resources and behind the meter generation in several regions of Ontario	2005 to 2006
BC Hydro	Member of Independent Reviewer Team	BC Hydro	Call for Tenders for 150 MW project on Vancouver Island.	2004 to 2005
Hydro-Quebec Distribution Wind Generated Electricity Call for Tenders	Independent Technical Consultant	Hydro-Quebec Distribution	Call for Tenders for 1,000 MW of Wind-Generated Electricity	2004 to 2005

**Competitive Procurement Experience of Merrimack Energy Group, Inc.
Including Role as Independent Evaluator ("IE) or Independent Monitor ("IM")**

Portland General Electric 2003 Request for Proposals	Independent Evaluator	Portland General Electric	600 MW RFP including all source long term resources, short-term options contracts, swaps, and exchange agreements.	2003 to 2005
Massachusetts Technology Collaborative	Consultant	Massachusetts Technology Collaborative	RFP for options agreements on Renewable Energy Certificates	2003
Hydro-Quebec Distribution Short-Term Call for Tenders	Independent Consultant	Hydro-Quebec Distribution	Semi-annual Call for Tenders for Short-term energy and associated capacity via definition of specific short-term products	2003 to 2007
Hydro-Quebec Distribution Biomass Call for Tenders	Independent Technical Consultant	Hydro-Quebec Distribution	Call for Tenders for 100 MW of biomass resources	2003
Hydro-Quebec Distribution Call for Tenders for Baseload and Cycling Resources	Independent Technical Consultant	Hydro-Quebec Distribution	Call for Tenders for 1,200 MW of Basload and Cycling Conventional Supply Side Resources	2001 to 2002
Maine Public Utilities Commission Standard Offer Service RFP	Consultant	Maine Public Utilities Commission	Standard Offer Service RFP	1999 to 2000
Houston Light & Power RFP	Consultant	Houston Light & Power	Summer Season Products in ERCOT	1999
Central and SouthWest Services	Independent Monitor	Central and SouthWest Services	RFP for Roof-top Photovoltaic systems on schools	1998
Public Service Company of Oklahoma	Independent Monitor	Central and SouthWest Services	All Source RFP – including supply side and DSM resources	1997
West Texas Utilities	Independent Monitor	Central and SouthWest Services	All Source RFP – including supply side and DSM resources	1995 to 1996
Southwestern Electric Power Company	Independent Monitor	Central and SouthWest Services	All Source RFP – including supply side and DSM resources	1995 to 1996

**Competitive Procurement Experience of Merrimack Energy Group, Inc.
Including Role as Independent Evaluator ("IE) or Independent Monitor ("IM")**

Central Power and Light	Independent Monitor	Central and SouthWest Services	Wind only RFP for 100 MW	1995 to 1996
Central Power and Light	Independent Monitor	Central and SouthWest Services	All Source RFP – including supply side and DSM resources	1995 to 1996
Wisconsin Power and Light	Independent Evaluator	Wisconsin Power and Light	RFP for 150 MW of long-term peaking capacity or tolling service agreements	1997
Carolina Power & Light Supply-side RFP	Independent Evaluator	Carolina Power & Light	1997 RFP for Peaking Capacity	1997
Carolina Power & Light Supply-side RFP	Independent Evaluator	Carolina Power & Light	1996 RFP for Combined Cycle and Peaking Capacity	1996
General Public Utilities Options RFP	Consultant	General Public Utilities	RFP for Option on power	1997
Delmarva Power & Light Options RFP	Independent Evaluator	Delmarva Power & Light	RFP for Option on power	1997
Duke Power Company Supply-side RFP	Independent Evaluator	Duke Power	RFP for Long-term peaking capacity and short-term options contracts	1996 to 1997
Boston Edison Company RFP #3	Consultant	Boston Edison	RFP for All Source resource options	1994 to 1995
Lower Colorado River Authority	Consultant	Lower Colorado River Authority	Turnkey contract for project development at Company-owned site	1995 to 1996
Commonwealth Edison	Independent Evaluator	Commonwealth Edison	All-source RFP for up to 2,200 MW of supply side and demand side resources	1993 to 1994
Baltimore Gas and Electric	Independent Evaluator	Baltimore Gas and Electric	Supply-side RFP	1992 to 1993
Delmarva Power and Light	Independent Evaluator	Delmarva Power and Light	Supply-side RFP	1989 to 1991

APPENDIX 2

El Paso Electric Company
Independent Evaluator Services
Statement of Work

This Statement of Work is agreed upon by and between El Paso Electric Company ("EPE"), and Merrimack Energy Group, Inc. ("Consultant"), pursuant to and in accordance with the Master Consulting Services Agreement between EPE and Consultant dated July 5, 2017 (the "Agreement"). The Services requested of Consultant for this project (the "Project") shall conform to the requirements of this Statement of Work and the Agreement; provided, however, that any irreconcilable conflict between the requirements of this Statement of Work and the Agreement shall be governed and controlled by the Agreement.

1. General Description and Location of Services

Merrimack Energy Group, Inc, the Consultant, as Independent Evaluator (IE) of El Paso Electric's (EPE) *2023 Request for Proposals for Renewable Energy for New Mexico* shall provide the services described in this Statement of Work. The overriding responsibility of the Consultant is to ensure the competitive bidding process is undertaken in a fair and unbiased manner with the objective of providing the best outcome for EPE's customers.

2. Consultant Requirements

2.1. Review and track the utility's implementation of the competitive bidding process from design of the RFP through contract negotiations.

2.2. Maintain a review and oversight function over the RFP process including:

a) RFP draft review,

b) Bidder proposal review,

c) Monitor communications with market participants, and

d) Monitor contract negotiations if needed.

2.3. Report any problems or concerns with the bidding process to EPE to aid in issue resolution if any arise.

2.4. Review and comment on the draft RFP documents and supporting documentation with the goal of:

a) Ensuring that the RFP documents are clear and concise with regard to the definition of the products sought, information required of bidders, solicitation schedule, and solicitation process,

b) Ensuring the RFP processes and procedures will lead to a fair and equitable solicitation process and encourage a robust market response,

c) Ensuring consistency between the RFP, Model Contracts or term sheets and information required of the bidders,

d) Ensuring that bidders are provided sufficient information to allow bidders to determine how to effectively compete in the process, and

e) Reviewing and commenting on the evaluation criteria, evaluation process and methodology, and ranking and selection process.

APPENDIX 2

2.5. Review and comment on the EPE's procedures and policies to ensure that self-build or affiliate options do not have any undue preferential treatment and to ensure the process is fair and transparent.

2.6. Relationship to Bidders

a) Review and critique EPE's responses to bidders' questions prior to distributing to bidders.

b) Monitor discussions with shortlisted bidders, if applicable.

c) Review and monitor communications with shortlisted bidders including requests for additional information to ensure all bidders are treated equitably.

2.7. "Advisory" Function

a) Identify and resolve any issues as they arise, that could affect the fairness of the process.

b) Identify industry "best practices" or strategies used by others to address similar issues.

2.8. Bid Evaluation Protocols and Procedures such as:

a) Review and verify that the bid evaluation was undertaken consistently with the bid evaluation criteria and protocols for non-price and price evaluation,

b) Review and verify shortlist selection process,

c) Review economic modeling approach and price evaluation for different resources (i.e. PPA, self-build, acquisition, load management resources, DG resources), and

d) Review and lock-down input assumptions prior to receipt of bids.

2.9. Receipt of bids

a) The Consultant is to be present at bid receipt and opening of bids when there is a self-build option. The Consultant along with representatives of EPE will be responsible for receiving bids, securing the bids, and logging in the bids received.

b) The Consultant is to prepare a high-level summary of the bids received and compare to EPE's list to ensure all bids are accounted for.

2.10. The role of the Consultant in the bid evaluation and selection process is to:

a) Oversee the evaluation and selection process to ensure that the process is fair and objective to all bidders,

b) Read and review all bids relative to the established criteria, and

c) Meet with the bid evaluation team during the bid evaluation process and "challenge" the results of the bid evaluation process.

2.11. Review all modeling results and analysis

a) Review the modeling inputs, model assumptions and model methodologies prior to receipt of bids.

APPENDIX 2

b) Thoroughly review and assess all the economic evaluation results, including model outputs.

c) Request supporting documentation, if necessary.

2.12. Role of the Consultant in Contract Negotiations:

a) Monitor the contract negotiation process, if required.

b) Participate in select negotiation sessions if deemed necessary by EPE, including all negotiation sessions with any affiliates, and

c) Review draft copies of the contracts.

2.13. Reporting Requirements

a) Identify a "watch list" of issues that need to be closely monitored during the process.

b) Submit a Final Findings Report to EPE which shall include the following but not limited to:

i. Description of the role of the Consultant;

ii. Description and review of the competitive bidding process and evaluation of Proposals;

iii. Evaluation of the Framework and Principles for proposal bid evaluation and selection process; and

iv. Recommendations for improving the RFP process.

2.14. Testify in the contract approval, project approval, and regulatory proceedings if required.

3. EPE Requirements

3.1. EPE will provide the necessary information to the consultant to perform the services as requested.

3.2. Items to be provided to the Consultant include but are not limited to:

a) 2023 Request for Proposals for Renewable Energy for New Mexico,

b) Bidder List,

c) Proposal evaluation process approach and criteria,

d) Bidder proposals,

e) Bidder submitted questions and EPE responses,

f) Proposal review results, and

g) Contract negotiations.

4. Period of Performance

The period of performance for the services shall begin on a date agreed upon between EPE's Project Manager and Consultant and shall continue until the services have been completed and accepted by EPE, in accordance with the Agreement.

APPENDIX 2

5. Pricing and Payment

5.1. The standard billing rate for the consulting services will be fixed at $250 per hour for the Principal Consultant and $150 per hour for the Associate Consultant for all hours worked on the project. The rate will be fixed for the term of the project. Charges shall be made only for on-task time and in increments of one-quarter (1/4) hour. Consultant services shall not exceed a total amount of $75,000.00 for the entirety of the project. In the case that additional costs are incurred for the project that exceed the budget of $75,000.00, a written change order will need to be submitted for the additional costs, and agreed upon by both parties, prior to services being rendered. Out of pocket expenses associated with travel, lodging and meals will be billed as incurred and require a supporting receipt of said expense provided with each invoice. Out of pocket expenses for travel and lodging are to be billed at Cost + 10%; all other expenses are to be billed at Cost. Any Alcohol consumed shall be paid for by the Consultant.

5.2. EPE shall pay for the services provided in accordance with the Agreement.

6. Taxes and Invoicing

6.1 **Taxes**
Consultant shall invoice EPE for and EPE agrees to pay, state gross receipts, or similar taxes, if applicable.

6.2 **Invoicing**
Consultant shall state on a single line the total amount due for the services. The invoice shall separately state the amount of New Mexico Gross Receipts Tax due on the invoice.

7. Books and Records
Consultant shall maintain complete and accurate records of the services provided pursuant to the Agreement and Statement of Work or any applicable Change Order. EPE or EPE's accountants, attorneys, representatives, or other agents shall have the right, at EPE's expense and on a reasonable basis with reasonable prior notice to the Consultant, to examine and copy such records during regular business hours during the term of the Agreement and for four (4) years following the termination of the Agreement or from completion of any related audit or litigation whichever is longer.

8. Project Manager
EPE's Project Manager for the services requested herein is Ronda R. Griffin, (915) 543-4146, ronda.richards@epelectric.com; Stanton Tower, 100 N. Stanton, El Paso, Texas 79901.
Consultant's Project Manager for the services requested herein is Wayne Oliver, (781)856-0007, waynejoliver26@gmail.com, 26 Shipway Place, Charlestown, Mass. 02129.

Merrimack Energy Group, Inc.	El Paso Electric
By: _____	By: _____
Signature	**Signature**
Wayne Oliver	Victor Martinez
Name	**Name**
President	Manager – Resource Planning, Resource Management Regulatory & Quality Assurance
Title	**Title**
_____	_____
Date	**Date**

APPENDIX A

Change Order Tracker

Project Name:									
Baseline Cost ($):									
Baseline Scheduled Completion Date:									
Baseline Manpower (# of Resources):									
				Impact (if applicable)					
		Change Language in the Section of the SOW		Cost		Schedule Completion		Manpower	
CO#	Section in SOW	From	To	From	To	From	To	From	To
1									
2									
3									
4									
5									
6									
7									
8									
9									
10									
11									
12									
13									
14									
15									
16									
17									
18									
19									
20									
21									
22									
23									
24									
25									
26									

Independent Evaluator Final Draft Report

El Paso Electric Company
2023 Request for Proposals for Renewable Energy for New Mexico

May 1, 2025

Prepared By

MERRIMACK
ENERGY GROUP, INC.

Table of Contents

1 INTRODUCTION 3

1.1 OVERVIEW 3

2 EL PASO ELECTRIC'S COMPETITIVE BIDDING PROCESS 5

2.1 BACKGROUND 5

2.2 SUMMARY OF COMPONENTS OF THE 2023 RENEWABLE ENERGY RFP FOR NEW MEXICO. 5

2.3 BIDDING DOCUMENTS 14

3 ROLE OF THE INDEPENDENT EVALUATOR 16

3.1 ACTIVITIES OF THE IE 16

3.1.1 IE Requirements 16

3.1.2 Receipt of Bids 18

3.1.3 Bid Evaluation and Selection Process 18

3.1.4 Contract Negotiations 18

3.1.5 Reporting Requirements 18

4 DESCRIPTION OF THE COMPETITIVE PROCUREMENT PROCESS THROUGH EVALUATION AND SELECTION OF PROPOSALS 19

4.1 OVERVIEW 19

4.2 PHASE 1 – RFP DEVELOPMENT PHASE 21

4.2.1 Development of the 2023 Renewable Energy RFP for New Mexico 21

4.2.2 Bid Evaluation Methodology and Evaluation Inputs & Criteria 21

4.2.3 Safeguards 22

4.2.4 Issuance of the 2023 Renewable Energy RFP for New Mexico 23

4.2.5 Outreach Activities 24

4.3 PHASE 2 – PROPOSAL DEVELOPMENT PHASE 24

4.3.1 Pre-Bid Webcast 24

4.3.2 Questions & Answers 25

4.3.3 Notice of Intent 25

4.3.4 Overview of the Bid Evaluation Methodology 25

4.3.5 Transmission System Impact Assessment 30

4.4 PHASE 3 – RECEIPT AND EVALUATION OF PROPOSALS 32

4.4.1 Receipt of Proposals 32

4.4.2 Review of Proposals and Follow-Up Questions to Bidders 34

4.4.3 Evaluation of Proposals 35

4.4.4 Shortlist Selection 37

4.4.5 Portfolio Considerations 40

4.4.6 PLEXOS Modeling 42

4.4.7 Notifications to Bidders of Final Selection 42

5 CONCLUSIONS AND RECOMMENDATIONS 43

5.1 CONCLUSIONS 43

5.2 RECOMMENDATIONS 47

LIST OF TABLES

TABLE 1: SUMMARY OF 2023 RENEWABLE ENERGY RFP FOR NEW MEXICO 5
TABLE 2: SCHEDULE FOR THE 2023 RENEWABLE ENERGY RFP FOR NEW MEXICO 15
TABLE 3: SUMMARY OF THE PROPOSALS RECEIVED BY TYPE OF PROJECT 33
TABLE 4: PROPOSED INITIAL SHORTLIST 38

1 INTRODUCTION

1.1 OVERVIEW

El Paso Electric Company ("EPE") selected Merrimack Energy Group, Inc. ("Merrimack Energy") to serve as the Independent Evaluator ("IE") for El Paso Electric's 2023 Request for Proposals for Renewable Energy for New Mexico ("2023 Renewable Energy RFP for New Mexico" or "2023 New Mexico RPS RFP"). Merrimack Energy's role as Independent Evaluator began at the time of development of the RFP and continued through the selection of the preferred resource(s).

El Paso Electric Company issued its 2023 Renewable Energy RFP for New Mexico on October 6, 2023[1], with the objective of obtaining short-term and/or long-term, cost effective and reliable electric resources available to meet EPE's New Mexico Renewable Portfolio Standard ("RPS") requirements per the New Mexico Renewable Energy Act ("REA") implemented through the New Mexico Public Regulation Commission ("NMPRC") Rule 17.9.572 ("Rule 572"). EPE will select proposals through the RFP to comply with the REA and Rule 572 and will seek required approval for the procurement from the New Mexico Public Regulation Commission ("NMPRC") to meet EPE's near term RPS obligations. EPE's preliminary determination is that it requires up to 150,000 megawatt-hours ("MWh) of renewable energy per year beginning May 1, 2025, if achievable, but no later than May 1, 2027.

The 2023 Renewable Energy RFP for New Mexico stated that EPE would consider proposals from Bidders that would include: (1) Power Purchase Agreements ("PPA") for the sale of energy and/or capacity; (2) proposals for EPE purchase of or equity participation in the Bidder's new or existing generation facility; (3) build-transfer agreements ("BTA")[2]; (4) distributed generation ("DG"), as well as other proposals that will help EPE achieve compliance with the REA and Rule 572 and provide for its energy needs. EPE stated that it may also submit a self-build in response to the RFP.

[1] EPE issued an amended version of the 2023 New Mexico RPS RFP on November 17, 2023. Changes to the RFP included identification of contacts at EPE for the RFP, clarification of Notice of Intent requirements, link to Microsoft Teams channel into which the bidders will submit their proposals, clarification of proposed fees and options allowed, identification of the timing for requesting interconnection into EPE's 2024 Spring Cluster and requirements for bidders regarding bidder strategy for utilizing the tax credits under the Inflation Reduction Act ("IRA") in their proposals, including Invest Tax Credits ("ITC") and Production Tax Credits ("PTC").

[2] Build Transfer Agreements ("BTA") are also referred to by some utilities as Build Own Transfer ("BOT") Agreements.

The 2023 Renewable Energy RFP for New Mexico stated that EPE is soliciting renewable energy resources that provide a guaranteed minimum annual generation. Proposals seeking to provide the full requirement should provide guaranteed minimum annual output of 150,000 MWh. EPE will consider acquiring a single resource or a combination of renewable energy resources that are proposed and evaluated in response to the RFP to attain the 150,000 MWh total. EPE may consider whether the proposals can also provide high availability, guaranteed generation output during peak hours in the months of May through September, in addition to providing firm renewable energy. EPE noted that it is interested in acquiring resources that will provide its required amount of guaranteed renewable energy per the REA and Rule 572.

For the 2023 Renewable Energy RFP for New Mexico, EPE proposed to use a single-stage pricing process to evaluate proposals in response to this RFP whereby the evaluation and selection of proposals would be based solely on the pricing of proposals submitted on the proposal due date. Therefore, this RFP does not contemplate Best and Final proposals. Bidders would be required to submit their "best" proposals on the initial proposal due date. EPE also noted in its 2023 Renewable Energy RFP for New Mexico that it would utilize a third-party independent evaluator ("IE") to oversee the RFP process. The IE will have access to all proposals and will actively participate in the RFP process.

EPE and Merrimack Energy agreed to a Statement of Work of Merrimack Energy as the Independent Evaluator. The Statement of Work is consistent with other competitive bidding assignments Merrimack Energy has undertaken in the industry in which Merrimack Energy had served as the IE.

The overriding responsibility of the IE is to ensure that the competitive bidding process is undertaken in a fair, transparent and unbiased manner with the objective of providing the best deal or outcome for EPE's customers. In addition, because there is a possible option of a self-build resource, one of the roles of the IE is to ensure that the self-build option does not receive any undue preferential treatment. The Statement of Work identifies the following high-level requirements for the Independent Evaluator. More specific and detailed information on the requirements of the IE Statement of Work and activities of the IE is contained in Section III of this report.

One of the other requirements of the IE is to submit a Final Findings Report to EPE which should include but not be limited to: (1) description of the role of the IE; (2) description and review of the competitive bidding process and evaluation of proposals; (3) evaluation of the framework and principles for proposal evaluation and selection; and (4) recommendations for improving the RFP process.

2 EL PASO ELECTRIC'S COMPETITIVE BIDDING PROCESS

2.1 BACKGROUND

As noted, the purpose of the 2023 Renewable Energy RFP for New Mexico is for EPE to acquire approximately 150,000 MWh of guaranteed renewable energy and associated RECs, by May 1, 2025, if achievable, but no later than May 1, 2027 to comply with EPE's REA and Rule 572 requirements, as well as to reliably meet its customer needs. EPE will evaluate proposals to identify the most cost-effective resources or combination of resources that meet the requirements. While short-term availability must be satisfied by the proposals, competitive resources with the ability to also support EPE's long-term portfolio needs will be evaluated more favorably.

2.2 SUMMARY OF COMPONENTS OF THE 2023 RENEWABLE ENERGY RFP FOR NEW MEXICO

The 2023 Renewable Energy RFP for New Mexico clearly identifies the requirements of El Paso Electric regarding the need for the resources solicited, types of products requested, the term of the proposals for each resource option, the amount of energy (MWh) requested, the timing of requirements, price and non-price factors considered in the evaluation process, a description of El Paso Electric's existing system including existing generation resources, a description of the role of transmission costs and access, and information which bidders need to incorporate into their proposals. As background, a brief summary of the key components and provisions of the 2023 Renewable Energy RFP for New Mexico are included in Table 1.

Table 1: Summary of 2023 Renewable Energy RFP for New Mexico

RFP Characteristics	2023 Renewable Energy RFP for New Mexico Provisions
Resource Requirements	EPE's preliminary determination is that it requires up to 150,000 MWh of renewable energy per year beginning May 1, 2025, if achievable, but no later than May 1, 2027. Only renewable energy that is delivered to EPE and assigned to New Mexico customers is eligible for RPS requirements under the REA and Rule 572.

Objectives of RFP	EPE seeks to obtain the most cost-effective resources or combination of resources that meet EPE's RPS requirements of 150,000 MWh annually.
Eligibility	The following eligibility requirements are listed in the RFP: • A Notice of Intent to Bid ("NOI") is mandatory for proposals to be accepted; • Bidders must certify that proposals meet the RPS requirements of the REA and Rule 572; • The renewable energy resource requirements are required to be online and operational no later than May 1, 2027. • A $2,500 non-refundable filing fee must be submitted with each primary proposal that can include a primary proposal and an additional two options; • All renewable energy that EPE may purchase pursuant to this RFP must be delivered to EPE's local transmission system (transmission system within EPE Balancing Authority Area) to ultimately serve EPE's New Mexico retail customers; • The resource must be eligible for designation by EPE as a Network Resource or Energy Resource under EPE's Open Access Transmission Tariff ("OATT"); • Bidders pursuing Network Resource Interconnection Service under EPE's Large Generator Interconnection Procedures, must submit an Interconnection Request under EPE's OATT in the next open cluster window, for any Bidder that is not already in EPE's interconnection queue, which is the 2024 Spring cluster study. A Bidder's interconnection request must be submitted by March 29, 2024 to be eligible to move into the negotiation phase, if selected; • Bidders for any proposals to be sited in New Mexico must meet New Mexico Construction Industries Licensing Act requirements to submit a bid. If not sited in New Mexico, Bidders must meet any

	licensing requirements that may be applicable at time of proposal submission per location of projects; • Failure to complete and return all required forms, tables and templates may result in disqualification of the bidder's proposal; • Proposals are to include and denote anticipated tax amounts. Actual tax treatment will be governed by the final executed contracts; • Bidders for eligible renewable resources must certify that proposals meet the RPS requirements of the REA and Rule 572; • EPE required bidders to have and provide evidence to EPE of a feasible site selected and at a minimum have a firm option to purchase or lease to demonstrate site control. For sites on federal land such as Bureau of Land Management, alternate documentation may be considered; • The bidder must clearly define dispatch capabilities for the proposed project. The proposal must outline any and all energy limitations; • EPE requires that Bidders provide a detailed description of the Bidder's strategy regarding the utilization of the Investment Tax Credit ("ITC") or Production Tax Credits ("PTC") associated with its project in their proposal; • All supply-side proposals will be required to establish real-time communications with EPE's Energy Management System ("EMS") to provide status information and be able to receive control signals for requirements such as Automatic Generation Control ("AGC"), curtailment of renewable resources, and dispatch control for applicable resources (e.g. renewable generation with battery storage);

	• The RFP document also identified specific requirements for each resource type and contract type; and • PPAs for renewable energy resources are to include the transfer of associated RECs to EPE at no additional cost.
Requirements Specific to Resource Types	The following requirements are listed in Section 5.0 of the RFP document and are applicable to specific resource types: • For all renewable resources, EPE prefers the ability to dispatch/curtail the renewable energy on an hourly basis. Bidders must submit their proposals by providing the data required for PPA proposals in Attachment 9.4. Proposals may only offer capacity pricing if they include battery storage or some other method to firm up the energy output. Proposals that include capacity pricing must provide the basis for measurement to determine the capacity. Bidders shall provide a predictable, specific methodology for energy pricing or energy and capacity pricing on an annual basis; • For non-intermittent renewable resources, proposals such as geothermal, biogas or biomass should identify and quantify fuel resource availability and ability to secure fuel resources for the life of the project. Any dispatchability or output limitations should be clearly described, including yearly total output expectations and commitments. Additionally, typical daily output profiles should be provided for each month and any firm commitment amounts should be conveyed; • For Intermittent Renewable Resource proposals such as solar and wind, these proposals should provide annual expected renewable energy production output and annual guaranteed renewable energy production output profiles. Intermittent

	renewable resource projects should be a minimum of 5 MW in size. If proposals are for facilities with a nameplate capacity greater than 50 MW, Bidders should propose the project in 25 MW increments. Inverter-based renewable resources, like solar and wind proposals, are required to utilize inverters and controls capable of output regulation/curtailment for load following, frequency response and voltage support via EPE's EMS control; • For energy storage, EPE requests that for renewable and storage options that the battery should be a four-hour battery with a MW size matching the size of the renewable resource. If the proposal is also capable of providing regulating and system support Bidders should provide operating capabilities and specifications including: number of expected cycles, charge and discharge ranges, round trip efficiency and degradation schedules. All proposals should be capable of direct monitoring and control by EPE's EMS system; and • Variable Energy Resources ("VERs") are to be AGC control capable for management of curtailment commands directly from EPE's EMS. For energy curtailment measurement, the bidder shall consent to using the five-minute VER forecast that is used in the market to establish the baseline for any measurement of curtailed energy.
Resource Alternatives/Product Requirements/Commercial Transactions	Proposals to be considered by EPE will include supply-side and demand-side energy alternatives including distributed generation (i.e., interconnection at the distribution grid voltage level). EPE may also include a self-build option. EPE will consider the proposal arrangements of the following types listed below: (1) Short-term PPA (one up to but not including five years) or Long-term PPA (term length from 5 years up to 20 years)

	for sale of energy or capacity and energy from new or existing resources; (2) Build-Transfer Agreement ("BTA") for standalone renewable generation, and renewable generation paired with battery storage; (3) proposals for renewable generation that are initially a PPA, to provide a build-transfer option at year five; and (4) proposals for EPE purchase or equity participation in the Bidder's new or existing generating facility.
Bidding Process	EPE proposed a multi-stage bid evaluation process which included a single-stage pricing process (i.e., inclusion of only a bid price with no opportunity for best and final pricing) to evaluate those proposals that have satisfied the threshold evaluation of responsiveness and viability. The steps in the bid evaluation process include the following steps: • threshold evaluation, • economic evaluation, • non-economic evaluation, • environmental evaluation (if applicable), • selection of proposals and discussions with Bidders, and • contract negotiations.
Utility Self-Build Options	EPE stated in the RFP that it may submit a self-bid option in response to the RFP.
Threshold Requirements/Evaluation	EPE initially reviews each proposal to determine whether it satisfies the threshold criteria of: (1) responsiveness, (2) technical viability, and (3) Bidder financial ability and capability. The responsiveness review would ensure that the proposal is complete, follows the guidelines set forth in the RFP, and includes all information required for a more thorough review. The technical viability review would determine whether the proposal meets EPE's requirements in a reliable manner and within the timeframe stated in the RFP. The Bidder financial ability and capability review would determine whether the bidder has adequate financial capability and

	adequate competence, resources, and skills to perform its proposal.
Economic Evaluation Process	Proposals that pass the threshold evaluation will be analyzed via a single-stage pricing process to evaluate proposals, whereby the evaluation and selection of proposals will be based solely on the proposals submitted on the proposal due date. Therefore, this RFP does not contemplate best and final proposals. The proposals would be evaluated from a levelized cost analysis basis and will be compared to proposals within their resource type group and economic standpoint to determine the proposed resource's relative cost effectiveness in meeting EPE's requirements. Once grouped, EPE may select the top-ranking bids from each group for inclusion on the shortlist. The shortlisted bidders will be modeled in EPE's optimization model to determine resource portfolio costs for selection of the winning bid(s). To quantify the capacity contribution of different energy resource types, EPE will also evaluate proposals based on the effective load carry capability ("ELCC") of the resources. The ELCC of each resource type will feed into EPE's resource portfolio analyses and help serve as a basis for ensuring resource adequacy.
Economic/Pricing Requirements	The economic analysis will incorporate the following characteristics of the proposed resource type as applicable: • firm energy costs, • fixed and variable O&M costs, • facility/Unit Start-up costs, • variable costs impacting production cost, • transmission and/or distribution system costs • other costs and system impacts, • potential federal regulation of carbon emission costs, and • taxes and tax credits.
Non-Economic Evaluation	EPE indicated it may also consider non-economic criteria not incorporated into the economic analyses in evaluating each proposal such as high-level criteria related to:

	• development feasibility and completion risk, • financial and operational viability, • operating characteristics, • other factors, and • EPE financial impact.
Environmental Evaluation (if applicable)	Proposals will be evaluated from an environmental standpoint to determine whether existing resources are in environmental compliance with current regulations and that proposed facilities can be permitted within the timeframe indicated.
Resource Selection	EPE may initiate contract discussions with bidder(s), as appropriate, following a review of the technical, economic, risk, and environmental factors. The RFP states that EPE reserves the right to enter into an agreement at any time with a Bidder who, in the opinion of EPE, would provide the greatest value to EPE and its customers. EPE also reserved the right to pursue contracts with other than the lowest price Bidder or with other than the Bidder evidencing the greatest technical ability, if EPE, in its sole discretion, determines that to do so would result in the greatest value to EPE and its customers. EPE reserves the right to enter into discussions with multiple bidders at any time in order to determine and pursue what EPE believes is in the best interest of EPE and its customers.
Site Control	EPE requires bidders to have and provide evidence to EPE of a feasible site(s) selected and at a minimum, have a firm option to purchase or lease the site to demonstrate site control with landowners and other stakeholders that may impact the execution of the land purchase. For sites on federal land such as Bureau of Land Management, alternate documentation may be considered.
Transmission Requirements	All energy or capacity and energy that EPE may purchase pursuant to this RFP must be delivered to EPE's local transmission system (transmission system within the EPE Balancing Authority Area) to ultimately serve EPE's New Mexico retail customers.

	Where the Bidder's resource is interconnected to a third-party transmission system, and not to the EPE local transmission or distribution system, the Bidder should identify in its proposal (a) the charges assessed by the third-party transmission service provider to reach the EPE transmission system and (b) the point on the EPE transmission system at which the Bidder's energy is to be tendered by the Bidder to EPE. In addition, the proposal must be accompanied by a demonstration that the Bidder has (or will) secure firm transmission capacity on such third-party systems from the location of the resource to EPE's local transmission system. The Bidder must identify the total cost to have its resource delivered to a substation on EPE's local transmission system and must include those third-party transmission system costs in its proposal. In cases where a resource directly interconnects to the EPE transmission system, the Bidder should identify (a) the point on the EPE transmission system at which the Bidder's energy is to be tendered by the Bidder to EPE; (b) whether the Bidder's resource is currently interconnected to the EPE transmission system and receiving interconnection service from EPE or whether the Bidder has requested interconnection service from EPE (and the type of interconnection service requested); (c) the current status of the Bidders generator interconnection request; and (d) the estimated Network Upgrade costs, if any identified in the generator interconnection process as necessary to permit the Bidder's generating facility to interconnect to the EPE transmission system. The RFP document also provides guidance for bidders regarding areas of delivery of power to EPE's transmission system that are subject to

	operating limits because these factors will be taken into consideration during the evaluation. The winning Bidders will be required to have in place or to secure Interconnection Service as specified in the EPE Large Generator Interconnection Procedures or Small Generator Interconnection Procedures and sign a Generator Interconnection Agreement as specified in EPE's Open Access Transmission Tariff ("OATT"). Bidders pursuing Network Resource Interconnection Service under EPE's Large Generator Interconnection Procedures must submit an Interconnection Request under EPE's OATT in the next open cluster window for any Bidder that is not already in EPE's interconnection queue. In addition, the resource must also be eligible to be designated by EPE as a Network Resource or Energy Resource under EPE's OATT.
Bid Fees	A $2,500 non-refundable filing fee must be submitted with each primary proposal. The filing fee will apply to a Bidder's primary proposal and a maximum of two alternative options. A proposal is defined by proposal site/location and resource technology type. An option is defined as the same proposal with varying options for nameplate, COD, pricing, inclusion of battery storage, or inclusion of a Right of First Offer and Right of First Refusal provision for a PPA.
Information Required of Bidders	Section 6 of the RFP identifies the outline of the proposal by topic area to ensure the format is consistent for all proposals as well as Attachments required to be provided with the proposal.

2.3 BIDDING DOCUMENTS

The 2023 Renewable Energy RFP for New Mexico RFP documents and website contain a number of Attachments which bidders were required to complete and submit with their proposals, as applicable to each proposal type. These include the following:

1. Attachment 9.1 – Notice of Intent to Bid;
2. Attachment 9.2 – Notice of Wire Payment Information;
3. Attachment 9.3 – Data Required For All Projects;
4. Attachment 9.4 – Additional Data for Purchased Power Agreements;
5. Attachment 9.5 – Additional Data for Equity Purchase (Full or Partial); and
6. Attachment 9.6 – Additional Data for Renewable Energy or Any Intermittent, Non-Dispatchable Resources.

Additionally, El Paso Electric provided an Excel file Workbook on the website for the 2023 Renewable Energy RFP for New Mexico Tables and Input Templates, which Bidders were also required to complete and submit with their proposals. These files included project specific information and pricing information which EPE could utilize to populate its evaluation models for undertaking the levelized cost of energy ("LCOE") assessment for purposes of ranking proposals and selecting a shortlist. The Excel File posted to the website contained the following tabs:

- 10.1 – General Information Table for All Bids;
- 10.2 – Standalone Renewable Bids:
- 10.3 – Renewable Plus Storage Bids;
- 10.4 – Bid Pricing; and
- 10.5 – 8760 Energy Profile.

The RFP document also included a copy of the solicitation schedule. Table 2 provides the original schedule contained in the final version of the RFP document[3].

Table 2: Schedule for the 2023 Renewable Energy RFP for New Mexico

Event	Date
Issue RFP	October 6, 2023
Pre-Bid Webcast	October 20, 2023
Notice of Intent to Bid	November 3, 2023
Date for Final Submission of Questions	December 1, 2023
Response to Questions	December 22, 2023
Proposal and Fee Due	January 5, 2024
Shortlist Notification	January 26, 2024
Notice of Final Bid Selections	March 15, 2024
Submittal to Spring Study Cluster for LGIA and SGIA Projects	March 29, 2024

[3] The original proposed schedule was not revised in the amended RFP. The schedule was revised slightly from preparation of the draft RFP to the final RFP.

Any procurement resulting from this 2023 Renewable Energy RFP for New Mexico is subject to approval by EPE's Board of Directors and the New Mexico Public Regulation Commission.

3 ROLE OF THE INDEPENDENT EVALUATOR

The role of the Independent Evaluator was agreed to by Merrimack Energy and EPE, as included as Appendix 2 in the Master Consulting Services Agreement between the parties and is entitled Independent Evaluator Services Statement of Work. The general roles of the IE are defined in Section I (i.e., Introduction) of the Statement of Work. Provided below are the more specific roles and activities which the IE was expected to be involved in throughout this competitive bidding process. As listed in the Statement of Work, the overriding responsibility of the Independent Evaluator is to ensure the competitive bidding process is undertaken in a fair and unbiased manner with the objective of providing the best outcome for EPE's customers. The discussion in Section IV of the Statement of Work will also identify the specific roles and activities of Merrimack Energy as the IE in the solicitation process.

3.1 ACTIVITIES OF THE IE

3.1.1 IE Requirements

- Review and track the utility's implementation of the competitive bidding process from design of the RFP through contract negotiations, if requested.[4]

- Maintain a review and oversight function over the RFP process including:
  - RFP draft review;
  - Bidder proposal review;
  - monitor communications with market participants; and
  - monitor contract negotiations, if needed.

- Report any problems and concerns with the bidding process to EPE to aid in issue resolution if any arise.

- Review and comment on the draft RFP documents and supporting documentation with the goal of:

[4] In this solicitation process, Merrimack Energy was not tasked with monitoring the contract negotiation process by EPE.

  - ensuring that the RFP documents are clear and concise with regard to the definition of the products sought, information required of bidders, solicitation schedule, and solicitation process;
  - ensuring the RFP processes and procedures will lead to a fair and equitable solicitation process and encourage a robust market response;
  - ensuring consistency between the RFP, Model Contracts or term sheets (if applicable) and information required of bidders;
  - ensuring that bidders are provided sufficient information to allow bidders to determine how to effectively compete in the process; and
  - reviewing and commenting on the evaluation criteria, evaluation process and methodology, and ranking and selection process.

- Review and comment on EPE's procedures and policies to ensure that self-build or affiliate options do not have any undue preferential treatment and to ensure the process is fair and transparent.

- Relationship to Bidders
  - review and critique EPE's responses to bidder's questions prior to distributing to bidders;
  - monitor discussions with shortlisted bidders, if applicable; and
  - review and monitor communications with shortlisted bidders, including requests for additional information to ensure all bidders are treated equitably.

- Advisory Function
  - identify and resolve any issues as they arise, that could affect the fairness of the process; and
  - identify "industry best practices" or strategies used by others to address similar issues.

- Bid Evaluation Protocols and Procedures such as:
  - review and verify that the bid evaluation was undertaken consistently with the bid evaluation criteria and protocols for non-price and price evaluation;
  - review and verify the shortlist selection process;
  - review economic modeling approach and price evaluation for different resources (i.e., PPA, self-build. Acquisition, load management resources, DG resources) and;
  - review and lock down input assumptions prior to receipt of bids.

3.1.2 Receipt of Bids

The IE was required to perform the following functions associated with this activity:

- The IE should be present at bid receipt and opening of bids when there is a self-build option[5];
- The IE, along with representatives of EPE will be responsible for receiving bids, securing the bids, and logging in the bids received;
- The IE is required to prepare a high-level summary of the bids received and compare to EPE's list to ensure all bids are accounted for.

3.1.3 Bid Evaluation and Selection Process

The IE was required to perform the following activities during the bid evaluation and selection phase of the process:

- oversee the evaluation and selection process to ensure that the process is fair and objective for all bidders;
- read and review all bids relative to the established criteria;
- meet with the bid evaluation team during the bid evaluation process and to "challenge" the results of the bid evaluation process;
- review the modeling inputs, model assumptions, and model methodologies prior to receipt of bids;
- thoroughly review and assess all the economic evaluation results, including model outputs; and
- request supporting documentation, if necessary.

3.1.4 Contract Negotiations

The role of the IE in contract negotiations includes the following:

- monitor the contract negotiation process, if required;
- participate in select negotiation sessions if deemed necessary by EPE, including all negotiation sessions with any affiliate; and
- review draft copies of the contracts, if applicable.

3.1.5 Reporting Requirements

The role of the IE with regard to reporting requirements includes:

- identify a "watch list" of issues that needs to be closely monitored during the process;
- submit a Final Findings Report to EPE which shall include the following:

[5] The IE was not present at the bid opening but had access to proposals at the same time as EPE's team. Merrimack Energy and EPE's team coordinated on initial review and summary of the proposals submitted to ensure the parties were consistent with regard to the number of proposals submitted.

  - description of the role of the IE;
  - description and review of the competitive bidding process and evaluation of proposals;
  - evaluation of the framework and principles for proposal evaluation and selection process; and
  - recommendations for improving the RFP process; and
- testify in the contract approval, project approval, and regulatory proceedings, if required.

4 DESCRIPTION OF THE COMPETITIVE PROCUREMENT PROCESS THROUGH EVALUATION AND SELECTION OF PROPOSALS

4.1 OVERVIEW

EPE's 2023 Renewable Energy RFP for New Mexico solicitation process was comprised of several phases, with a number of major activities within each phase. This section of the report will discuss each of the RFP phases and the major activities, issues and decisions which occurred in each Phase. The primary phases of most power procurement solicitation processes include the following.

1. **RFP Development Phase** – The initial phase includes activities associated with the development of the RFP documents, bid evaluation process, methodology and evaluation criteria, outreach activities to inform bidders of the issuance of the RFP, and coordination of project team members. In addition, at the beginning of this phase, the self-bid team and RFP management and evaluation team are separated with regard to their functions in the process before the RFP document preparation begins. The EPE project team[6] and IE held discussions during this phase to identify issues and tasks that needed to be addressed with regard to the implementation of the solicitation process and the timing for completing such tasks.

2. **Bid Preparation Phase** - Once the RFP is issued, the second phase of the solicitation process generally involves activities associated with proposal development on the part of the bidders and preparation for receipt of proposals by the utility. Activities in this phase include implementation of a Bidders Conference to describe the solicitation process and seek questions from Bidders, an extended Q&A process after the Bidders Conference to

[6] EPE's project team for the RFP was largely comprised of members of the Market Development and Resource Strategy Department at EPE which were responsible for managing the solicitation process and conducting the evaluation of proposals.

allow bidders to seek responses to questions which aid in the development of their proposals, completion and lock-down of the bid evaluation methodology and evaluation criteria, and preparation and lock-down of input assumptions that will be used to ensure a consistent evaluation of all proposals.

3. **Receipt and Evaluation of Proposals** – The third phase of the solicitation process begins with the receipt of proposals, and includes initial assessment to ensure the proposals conform to minimum or threshold requirements listed in the RFP document, and includes evaluation of proposals, selection of a shortlist (if applicable), submission and evaluation of final offers (if applicable) and culminates with final proposal(s) selection after a thorough review of the quantitative and qualitative aspects of the proposals. As noted, EPE implemented a solicitation process which incorporated a one-step pricing process which included selection of a shortlist based on initial pricing and then portfolio evaluation of the proposals contained on the shortlist based on the initial pricing submitted. EPE initiated a one-step pricing process to signal to bidders to include their best pricing with their proposal to expedite the evaluation and selection process[7] because EPE had a short time period to select a shortlist and allow shortlisted bidders sufficient time to submit an interconnection application for the Spring 2024 cluster study process by March 29, 2024, if required.

4. Contract Negotiations – Once the final selection list had been identified, the utility will then begin contract negotiations with the selected entities with the objective of executing a final contract with third-party bidders.

5. Regulatory Filing – The final stage in the process is the resource approval stage in which the utility makes the required filings to the regulatory commissions seeking regulatory approval for the resources selected.

Merrimack Energy was primarily involved in the initial three phases of the solicitation process. As noted, Merrimack Energy was not requested to monitor contract negotiations with bidders. Subsequent sections of the report address the activities and decisions in each of these phases.

[7] Both approaches (one-step and two-step pricing processes) are commonly used in the industry to evaluate and select proposals.

4.2 PHASE 1 – RFP DEVELOPMENT PHASE

El Paso Electric selected Merrimack Energy to serve as Independent Evaluator for both the 2023 Renewable Energy RFP for New Mexico and the 2023 All Source RFP for Texas in August 2023, before development of the final RFPs and associated documents[8]. For both RFPs, Merrimack Energy had the opportunity to comment on the draft RFP documents and submit questions to the EPE team to clarify the bid evaluation methodology and evaluation criteria. Merrimack Energy submitted a number of comments on the draft 2023 Renewable Energy RFP to New Mexico in mid-September 2023. As a result, the IE was involved in the solicitation process from development of the RFP and development of the evaluation methodology and processes through the selection of the preferred resource(s).

4.2.1 Development of the 2023 Renewable Energy RFP for New Mexico

EPE provided a draft of the 2023 Renewable Energy RFP for New Mexico to Merrimack Energy for review and comment in mid-September 2023. The IE had several comments and questions on the draft RFP that were submitted to EPE. Merrimack Energy's comments were related to clarification issues in the RFP document as well as comments regarding the proposed schedule. The IE was concerned that the schedule from receipt of proposals to shortlist selection was too short.

4.2.2 Bid Evaluation Methodology and Evaluation Inputs & Criteria

One of the initial areas of discussion between the IE team and the EPE RFP team was generally focused on the development of the appropriate evaluation methodology and process along with the evaluation criteria that would be used to evaluate and select proposals submitted in response to the RFP. Because Merrimack Energy had served as IE for several previous El Paso Electric RFPs, Merrimack Energy was familiar with the proposed evaluation methodology for shortlisting and final selection as well as qualitative or non-price criteria that would also be considered in ranking and selecting proposals. For the 2023 Renewable Energy RFP for New Mexico, the IE was focused on any changes that EPE intended to make to the evaluation process and methodology relative to previous EPE solicitations. Merrimack Energy also recognized that because the 2023 All Source RFP for Texas followed the 2023 Renewable Energy RFP for New Mexico, and that the evaluation process for both the New Mexico and Texas solicitations would be

[8] The 2023 Renewable Energy RFP for New Mexico was issued on October 6, 2023, several weeks before the 2023 All Source RFP for Texas RFP. Proposals were due on January 5, 2024 for the 2023 Renewable Energy RFP for New Mexico, with bids for the 2023 All Source RFP for Texas due on January 26, 2024.

more compressed relative to typical EPE solicitations, that it was necessary to focus a substantial effort on ensuring the IE had a detailed understanding of EPE's proposed evaluation methodology, evaluation process, and economic models that EPE intended to use for 2023 Renewable Energy RFP for New Mexico.

EPE informed Merrimack Energy during the development of both the 2023 New Mexico and Texas RFPs that it was planning to use the LCOE methodology to evaluate and rank proposals by resource category and then utilize the PLEXOS[9] model for portfolio optimization based on the shortlisted proposals selected via each RFP since EPE has adopted the PLEXOS model for the preparation of its previous Integrated Resource Plan. EPE noted it still planned to utilize its spreadsheet Levelized Cost of Energy Model to calculate the levelized cost of energy for each PPA proposal and for comparing similar bids (i.e., bids for similar or like resources) against each other. From a fairness and consistency perspective, the IE's view was that the overall methodology constructs and input assumptions should be prepared prior to receipt of proposals. EPE conformed to this suggestion.

4.2.3 Safeguards

Because EPE identified that it may also submit a self-build resource in response to the 2023 Renewable Energy RFP for New Mexico and the 2023 All Source RFP for Texas, one of the issues was a discussion of the safeguards that would be adopted by EPE to ensure that the self-build resources would have no undue advantage over other bidders and that all bidders would be treated fairly and consistently. EPE's RFP team and the IE held discussions about the safeguards that were in place to ensure that all bidders would be treated equitably, which were similar to discussions during prior solicitation processes, including the 2021 All Source RFP for New Mexico. EPE notified the IE that similar safeguards would be in place for this solicitation as well. These included the following:

- The team that would submit the self-build proposals and the team responsible for management and implementation of the RFP were separate from both a physical and operational perspective. The "walls" between the self-build team and the RFP team were established before the development of the 2023 Renewable RFP for New Mexico commenced;
- EPE retained the services of Merrimack Energy as Independent Evaluator early in the development of the solicitation process. Merrimack Energy has

[9] The PLEXOS model is a capacity expansion software that selects the lowest cost portfolio of resources from those resources modeled that can meet the capacity and energy needs of a utility system at the lowest system cost. PLEXOS optimizes resource selection based on a set of specific assumptions and constraints that are built or input into the PLEXOS model.

served as Independent Evaluator or similar function on over 180 competitive bidding processes in 23 states and 3 Canadian Provinces;

- The RFP team implemented a secure filing and database system that would only be accessible to 2023 Renewable Energy RFP for New Mexico evaluation team members. Files associated with confidential information regarding the 2023 Renewable Energy RFP for New Mexico were stored in a document management system (Microsoft Teams channel) with restricted access only to select members of the RFP evaluation team. Microsoft Teams provides a protected database that would be used to share information about the RFP, proposals received, and evaluation results among only the evaluation team members responsible for implementing the RFP process;
- EPE has a detailed Standards of Conduct and a Code of Ethics in place to which all employees must adhere and agree to be bound; and
- The self-build team was required to provide all the same information for their proposal(s) as all other third-party proposals to ensure all proposals were evaluated based on the same general information.

4.2.4 Issuance of the 2023 Renewable Energy RFP for New Mexico

On October 6, 2023[10], El Paso Electric issued its 2023 Renewable Energy RFP for New Mexico and posted it to its website. EPE also sent the 2023 Renewable Energy RFP for New Mexico RFP documents to a list of previous RFP participants and any participants that had requested to be included on the distribution list. EPE sent notification to its list of potential bidders regarding issuance of the RFP and issued the notification through a press release. EPE stated in the notification that through the 2023 Renewable Energy RFP for New Mexico, EPE plans to obtain short-term and/or long-term renewable energy resources for its New Mexico customers by 2027. The stated objective of the RFP was to obtain cost effective and reliable renewable electric resources to comply with the New Mexico Renewable Portfolio Standard ("RPS") requirements. The notice on the webpage for the RFP stated that the New Mexico Renewable Energy Act ("REA") requires EPE to meet 40% of its New Mexico retail energy sales with renewable energy resources beginning in 2025, increasing to 50% in 2030. Only renewable energy that is delivered to EPE and assigned to New Mexico customers is eligible for RPS requirements under the REA. The webpage also stated that the RFP welcomes all forms of renewable energy resources, particularly those that come bundled with their associated Renewable Energy Certificates and attributes as defined by the REA. As part of New Mexico's RPS, EPE has identified the need for short-term

[10] The 2023 All Source RFP for Texas was issued nearly four weeks after the 2023 Renewable Energy RFP for NM was issued on October 6, 2023. In addition, proposals were due for the 2023 Renewable Energy RFP for New Mexico on January 5, 2024, while proposals were due for the 2023 Texas RFP on January 26, 2024.

and/or long-term resources that will generate approximately 150,000 MWh per year of additional renewable energy by May 1, 2025, if achievable, but no later than May 1, 2027.

The webpage for the 2023 Renewable Energy RFP for New Mexico contained information on the Pre-Bid Webcast scheduled for October 20, 2023 as well as access to the RFP document and Q&A document. EPE also encouraged interested bidders to submit questions in advance of the Webcast so that EPE could strive to have prepared responses available at the Webcast.

4.2.5 Outreach Activities

In addition to providing notification of the RFP to the participants list, the issuance of a press release, and information posted to EPE's 2023 Renewable Energy RFP for New Mexico website that notified prospective bidders and interested parties of the availability of the RFP, the notice also identified the website address for accessing the RFP and identified the date for the Pre-bid Webcast. The press release was also sent to major energy publications and newswires who typically publish information about power procurement activities.[11]

With regard to outreach activities, EPE also sent out formal invitations to over 600 contacts, in addition to issuing the press release. The list of potential bidders included the original list of contacts from past RFPs, and a list from the Company's renewable energy group.[12]

4.3 PHASE 2 – PROPOSAL DEVELOPMENT PHASE

4.3.1 Pre-Bid Webcast

A Pre-Bid Meeting (Webcast) was held on October 20, 2023, as scheduled. EPE's project team manager introduced the RFP project team, staff and the IE, along with identifying the role of the IE. EPE's project team manager also provided an overview of the EPE system along with a high-level map of its service territory. EPE also provided an overview of the New Mexico Renewable Portfolio Standard ("RPS") requirements as well as an overview of the requirements of the RFP. EPE noted that it required up to 150,000 MWh of guaranteed renewable energy by May 1, 2025, but no later than May 1, 2027.

[11] The IE did see mention of issuance of the both RFPs in Daily Energy Insider, BusinessWire, and GridMonitor.
[12] EPE issued RFPs for power resources in 2003, 2006, 2008, 2011, 2017, 2019, and 2021 All Source RFPs for both Texas and New Mexico.

The project team manager also provided an overview of the RFP minimum eligibility requirements for bidders, proposal and contract structure arrangement options, and transmission service requirements. The project manager also discussed the solicitation process schedule, email address for EPE staff and general email addresses regarding inquiries related to the RFP, bidder registration requirements and processes, offer forms, and tables and templates that bidders were required to complete and submit with their proposal. In addition, the project team manager discussed the confidentiality and public disclosure requirements and Questions and Answers process should bidders wish to submit questions about the RFP. EPE estimated that 43 attendees participated in the Pre-Bid Webcast.

4.3.2 Questions & Answers

Based on the solicitation schedule, responses to bidder questions were due on December 22, 2023. Over the roughly two-month Q&A period, EPE received and responded to twenty-two questions from prospective bidders. EPE posted the Q&A document for questions received through Pre-Bid Webcast on November 14, 2024 to the public website. The final document for the remaining Q&As were posted to the SharePoint website on January 10, 2024. The IE reviewed EPE's responses to the questions. The responses posted in the SharePoint website were available to all bidders. The IE also found that EPE was efficient in preparing responses to bidders and posted the responses in a timely manner.

4.3.3 Notice of Intent

EPE received Notices of Intent to bid forms from approximately 25 companies in response to the NOI request for the 2023 Renewable Energy RFP for New Mexico. The majority of the NOIs were for solar projects or solar with storage options.

4.3.4 Overview of the Bid Evaluation Methodology

As noted, EPE proposed to use a multi-phased evaluation process for review and assessment of the proposals received for each RFP which included the phases listed below.[13] The evaluation process and overall methodology were described in the RFP documents. A description of the bid evaluation methodology and evaluation process phases for the RFP is provided below.

[13] EPE planned to utilize a one-stage or single-stage pricing process to evaluate all proposals in response to both the New Mexico and Texas RFPs, whereby the evaluation and selection of proposals would be based solely on the proposal pricing submitted on the proposal due date. There would be no scheduled "best and final" pricing included in the RFP schedules given the short time scheduled for the RFPs.

1. **Threshold Evaluation** - review of the proposals received to determine whether the proposals satisfy the threshold criteria of responsiveness, technical viability, and Bidder financial ability and capability. The responsiveness review was designed to ensure the proposal was complete, followed the guidelines set forth in the RFP, and included all the information required for a more thorough review. The technical viability review determined whether the proposal met EPE's requirements in a reliable manner and within the timeframe stated in the RFP. The Bidder's financial ability and capability review was designed to determine whether the Bidder had adequate financial capability, adequate competence, resources and skills to perform as proposed. At EPE's discretion, any proposal deemed materially incomplete or technically deficient may be excluded from further consideration. EPE also reserved the right to seek clarification of proposal information or additional proposal information from bidders.

Proposals that passed the threshold evaluation would then be analyzed based on the defined evaluation process.

2. **Economic Evaluation** – proposals which pass the threshold evaluation will be analyzed via a single-stage pricing process. From an economic perspective, proposals would be evaluated on a levelized cost of energy ("LCOE") basis and would be compared to proposals within their resource type group (e.g., solar only, solar with battery storage[14], wind only, wind with battery storage, stand-alone storage, and other resources as well as distinguishing PPAs and BOTs) from an economic standpoint to determine the proposed resource's relative cost effectiveness in meeting EPE's requirements. The economic analysis would incorporate the following characteristics of the proposed resource: (1) Net capacity offer or purchase offer and capacity costs and energy costs; (2) Fixed and variable O&M costs; (3) transmission and/or distribution system costs[15]; (4) Other costs and system impacts; (5) Potential federal regulations of carbon emission costs, if applicable; and (6) Taxes. The best proposals in each category would then be ranked and eventually selected for the shortlist based on the original pricing contained in each proposal.

[14] For solar with battery storage options, EPE organized and evaluated proposals in which the nameplate capacity for solar and storage was the same (i.e., solar at 100 MW and storage at 100 MW nameplate) and for proposals in which solar nameplate capacity was twice the size of the storage nameplate capacity (i.e., solar at 100 MW and storage at 50 MW nameplate) based on the different LCOE values associated with each combination of solar and storage options submitted.

[15] While EPE included estimates of transmission and network upgrade costs in prior RFPs, these cost estimates were not directly included in this economic assessment at this stage in the process because many projects were in the early stages of development and would be required to enter the spring Study Cluster for the LGIA process.

For the economic evaluation, EPE used three spreadsheet models to calculate the LCOE values as part of conducting the initial evaluation of the proposals received: (1) a spreadsheet model for PPA proposals including solar, wind, storage and other renewable only bids; (2) a revenue requirements model for cases where EPE would own the project and include the project in rate base (i.e., self-build, build-transfer for EPE to purchase the proposed generation resources for standalone solar and solar paired with storage, and proposals for EPE purchase or equity participation in the Bidder's existing generating facility); and (3) an extension of the PPA spreadsheet model for evaluating the combination of renewable resources and energy storage options by calculating the levelized cost of renewable energy plus separate or bundled storage costs given the round-trip efficiencies proposed for charging and discharging the battery or storage facility.

The use of spreadsheet models to evaluate the LCOE values for various resource types and contract options was based on the expected energy generation profile, as provided by the bidder. Thus, for renewable resources, EPE used the estimated generation or generation profile provided by the bidder in calculating the initial LCOE values.

3. **Non-Economic Evaluation** - EPE would also conduct an initial risk assessment focused on non-price factors in conjunction with the economic analysis for informing selection decisions. The risk assessment would be performed for all proposal options for assessing the reasonableness of the proposed COD. High-level non-economic criteria included: (1) development feasibility and completion risk criteria such as interconnection, permitting and site status; (2) financial and operational viability; (3) operating characteristics; and (4) other factors or criteria.

4. **Environmental Analysis** - EPE also noted that proposals may be evaluated from an environmental standpoint to determine whether existing resources are in environmental compliance with current regulations and that proposed facilities can be permitted within the timeframe indicated. The overall environmental impact of the facilities may also be addressed.[16]

5. **Portfolio Evaluation** - Following review of the proposals from an economic and non-economic perspective, EPE would select the top-ranking bids from each group for the overall shortlist. The shortlisted proposals would be

[16] For this RFP, EPE did not conduct an environmental analysis because it was requesting RPS eligible renewable energy through the 2023 Renewable Energy RFP for New Mexico.

modeled in EPE's optimization model (i.e., PLEXOS) to inform selection of the preferred proposal(s). EPE would then enter into contract negotiations with proposals that, in the opinion of EPE, provided the greatest value to EPE and its customers. EPE also indicated it reserved the right to pursue contracts with other than the lowest price bidder if EPE determined that to do so would result in the greatest value or lowest risk to EPE and its customers. As will be discussed later in this report, EPE combined the economic analysis in conjunction with an assessment of the estimated ability of a project to achieve its proposed Commercial Operation Date ("COD") based on its interconnection status, project location and interconnection point, expected completion date for required interconnection facilities and network upgrades, and cost for such facilities as a primary project viability factor.

The LCOE models were designed to calculate the levelized cost of each bid based on the pricing proposal submitted by each bidder subject to the input assumptions developed by EPE prior to receipt of bids. As noted, separate LCOE models were developed for PPA options and for utility-owned or Build Transfer Agreement options. EPE planned to calculate two metrics using the spreadsheet models: (1) the models calculated the net present value of the total cost stream for each proposal over the contract term or economic life of the project divided by the net present value of the generation output over the same term: and (2) the models calculated the annual annuity of the total cost stream for each proposal over the contract term or economic life of the project divided by the average annual energy over the same term.

For utility-owned projects, the cost stream included the capital cost associated with constructing the project as well as the cost of operating the project.[17] In addition, any tax incentives and benefits such as PTCs and ITCs resulting from the Inflation Reduction Act would also need to be included in the Revenue Requirements assessment.[18] Annual costs ("Utility Revenue Requirements") were discounted based on the utility's discount rate. The present value of the revenue requirements stream over the project/contract life was calculated as the sum of the discounted annual revenue requirements. The Levelized Cost of Energy

[17] For a project owned by the utility, the cost of service is based on utility annual revenue requirements associated with the project. For a PPA, the model assessment would be based upon a combination of an energy charge, capacity charge, fixed O&M charge, and variable O&M charge included in the bidders pricing proposal that was applicable for the specific resource. For renewable resources such as solar and wind, an energy charge would likely be the only charge applicable, while for a solar plus storage project option, costs could include both an energy charge (for solar) and capacity charge (for storage).

[18] While third-party PPA bidders would decide how the tax benefits or credits would affect their final pricing proposed, for BTA or self-build proposals such benefits or incentives need to be included as well since utility regulations generally require that the tax benefits or incentives are flowed back to customers.

("LCOE") was then calculated as the present value of revenue requirements over the life of the resource divided by the present value of the annual Megawatt hours generated by the project. An LCOE value was calculated by EPE for all proposals in 2024 dollars. These spreadsheet models are best used to assess the costs of similar projects and select the best proposals or a short list of proposals from a group of similar projects.

As IE for recent EPE RFPs, Merrimack Energy has reviewed and commented on EPE's spreadsheet models designed to calculate the LCOE values for each resource type, including the PPA options, combination of renewable resources and energy storage and a revenue requirements model designed to evaluate utility ownership options, which could include a self-build resource, purchase of an existing generation asset, or a Build-Transfer option built by a third-party on a bidder owned site. For example, Merrimack Energy had reviewed EPE's economic analysis of proposals submitted into the Company's 2021 RFPs for New Mexico and Texas. However, the changes required by the IRA also needed to be validated for assessing the impacts of PTC and ITC values in modeling utility-owned resources. During the review of proposals submitted in response to the 2023 Renewable Energy RFP for New Mexico, Merrimack Energy discovered several errors in the evaluation of PPA proposals associated with timing and term consistency as well as errors associated with Production Tax Credit treatment for third-party Build Transfer Agreements. Merrimack Energy worked with EPE's RFP teams to make corrections to the models prior to completion of the final evaluation results for each of the 2023 RFPs. Merrimack Energy and EPE project team staff conducted several discussions during the New Mexico and Texas RFP processes about the revenue requirements model to ensure the model contained consistent assumptions and methodologies to reflect the valuation of a cost-of-service resource option in light of the requirements associated with implementation of the Inflation Reduction Act.[19] In addition, the EPE team and IE also met with E3 to discuss the implications of the Inflation Reduction Act on the tax incentive and regulatory constructs for evaluating utility ownership options relative to PPA options on a level playing field and in a consistent manner.

As noted, in addition to the economic evaluation, EPE also considered several non-economic factors in its evaluation, including factors associated with viability of the project including, but not limited to financial risk, technology risk and

[19] Merrimack Energy suggested during the RFP development process that EPE consider asking E3 to review EPE's revenue requirements model to ensure the model accurately captures the tax benefits (i.e., ITC and PTC) and treatment of the tax credits (i.e., normalization accounting) included in the Inflation Reduction Act and accurately included all required costs and input assumptions in the revenue requirements model before proposals were received including Fixed and Variable O&M costs, property taxes, insurance costs, land lease costs, degradation, round-trip efficiency and on-going capital expenditures. EPE did retain E3 to review the revenue requirements model and inputs before proposal submission.

project execution risk. The IE reviewed the proposals with regard to the LCOE evaluation results as well as from the perspective of identifying project viability issues associated with each proposal, if applicable. The IE also developed and provided follow-up or clarifying questions for EPE to send to bidders to clarify information provided in the proposals.

Under the original schedule for the 2023 Renewable Energy RFP for New Mexico, EPE intended to select a shortlist by January 26, 2024 and provide notices of final bid selections and contract award by March 15, 2024 after conducting its portfolio optimization assessment on the shortlisted proposals. EPE informed Merrimack Energy that it intended to utilize the PLEXOS model to assess unique resource portfolios of shortlisted resources across a range of different planning cases to identify the most cost-effective resources that would be capable of meeting EPE's system requirements at the lowest reasonable cost. The modeling of proposals in PLEXOS would be based on EPE's 2023 IRP process.

4.3.5 Transmission System Impact Assessment

As previously described, the RFP document also provides a substantial amount of guidance to bidders regarding transmission system issues and requirements. The RFP requires that all renewable energy that EPE may purchase pursuant to the RFP must be delivered to EPE's local transmission system (transmission system within the EPE Balancing Authority Area) to ultimately serve EPE's New Mexico retail customers.

One of EPE's RFP project team concerns was the implication of transmission constraints and cost on project evaluation and selection. As EPE noted, the company system is constrained by transmission import limits given its physical location as a terminal point in the Western Electricity Coordinating Council ("WECC").[20] The RFP document provides guidance to bidders regarding potential transmission constraints on the system.

As noted in the 2023 Renewable RFP for New Mexico document, delivery of power to EPE's local transmission system into Springville, Greenlee and West Mesa is subject to WECC Path 47 operating limits and this factor will be taken into

[20] Where the bidder's resource is interconnected to a third-party transmission system, and not to the EPE local transmission or distribution system, the bidder should identify in its proposal (a) the charges assessed by the third-party transmission service provider, including applicable ancillary services, to reach the EPE transmission system; and (b) the point on the EPE transmission system at which the bidder's energy is to be tendered by the bidder to EPE. In addition, the proposal must be accompanied by a demonstration that the bidder has (or will) secure firm transmission capacity on such third-party systems, from the location of the resource to EPE's local transmission system. The bidder must also identify the total cost to have its resource delivered to a substation on EPE's local transmission system and must include those third-party transmission system costs in its proposal.

consideration during bid evaluation. Furthermore, if the resource is located outside of EPE's Balancing Area and is intermittent/non-dispatchable (e.g., solar and wind), the bid must also include a proposed method of dealing with regulating and balancing requirements, and any associated costs (i.e., battery storage regulation and regulating services by the host Balancing Authority Area Operator).

Where the Bidder's resource is directly interconnected to the EPE transmission system, the Bidder should identify in its proposal (a) the point on the EPE transmission system at which the Bidder's energy is to be tendered by the Bidder to EPE; (b) whether the Bidder's resource is currently interconnected to the EPE transmission system and receiving interconnection service from EPE or whether the Bidder has requested interconnection service from EPE (and the type of interconnection service requested); (c) the current status of the Bidder's generator interconnection request; and (d) the estimated Network upgrade costs, if any, identified in the generator interconnection process as necessary to permit the Bidder's generating facility to interconnect to the EPE transmission system.

EPE stated that it will select the winning proposal(s) after EPE identifies and evaluates the proposals that best meet its objectives and that are comprised of the most economic and reliable resources from each resource type group based upon each resource's total cost delivered to the boundary of EPE's transmission system. Final selection of winning proposal(s) will include consideration of whether resources proposed require network upgrades in order for EPE to receive the energy into the EPE local transmission system and/or in order to deliver energy to EPE's New Mexico retail customers by including those estimated costs. Final selection of winning proposal(s) also will include consideration of whether the resource(s) and bidder have demonstrated a commitment and ability to be ready to serve EPE load in a timely manner.

The winning bidder(s) will be required to have in place or to secure Interconnection Service as specified in the EPE Large Generator Interconnection Procedures (Network Resource Interconnection Service or Energy Resource Interconnection Service) or as specified in EPE's Small Generator Interconnection Procedure, as applicable and sign a Generator Interconnection Agreement as specified in EPE's Open Access Tariff. In addition, Bidders pursuing Network Resource Interconnection Service must submit an Interconnection Request under EPE's OATT in the next open cluster window, for any bidder that is not already in EPE's interconnection queue. For this RFP, the required cluster study is EPE's 2024 Spring Cluster Study. A Bidder's Interconnection Request must be submitted by March 29, 2024 to be eligible to move to the negotiation phase, if selected. The

resource must be eligible to be designated by EPE as a Network Resource under EPE's OATT.

While awarded proposals must submit into the Spring 2024 cluster study, EPE noted that if any unforeseen circumstances arose that delay the RFP award process, EPE may request that shortlisted proposals submit into the Spring cluster study pending award.

During the RFP, the EPE RFP project team worked with the System Planning and Interconnection ("SPI") Departments within EPE during the evaluation process to ensure all projects that were eligible to be considered for selection were evaluated appropriately. The SPI team analyzed each proposal's transmission and interconnection viability relative to its' geographic location, project size, proposal timing for COD, interconnection status, and known (by SPI) existing or potential constraints in the area of the proposed point of interconnection. As described later in this report, EPE's Transmission Group assessed the status of shortlisted proposals in the interconnection process, substation readiness to interconnect at the proposed POI, estimated interconnection facilities required, the estimated timeline to complete the facilities after execution of the LGIA, and the calculated in-service date timeline given the known information about the EPE system.

The requirements outlined in the RFP and methodology used by EPE were designed to ensure that all proposals were fairly treated from a transmission access and timing perspective for getting the projects on-line.[21]
Based on current market conditions, EPE's perspective was that transmission related issues can have a major impact on project success and timing. Based on EPE's capacity needs, EPE utilized the internal analysis on the estimated timelines for completing interconnection facilities to assess the viability of the project's on-line date.

4.4 PHASE 3 – RECEIPT AND EVALUATION OF PROPOSALS

4.4.1 Receipt of Proposals

Proposals were received on January 5, 2024, as requested. EPE received a reasonably robust response from the market. Some of the projects submitted were later also bid into EPE's 2023 All Source RFP for Texas. All proposals were submitted by bidders directly into their specified Microsoft Teams folders set up by EPE for

[21] For the 2023 Renewable Energy RFP for New Mexico, EPE's SPI team conducted an assessment of each shortlisted project.

each bidder. Merrimack Energy was able to access and download all proposal documents after the offer submittal deadline. Merrimack Energy reviewed the proposals along with EPE's RFP team and prepared a summary of the proposals and alternatives submitted and reviewed EPE's list to ensure the Company and IE had accounted for all proposals and options received. EPE received a total of fifty-nine (59) alternative proposals from fourteen (14) Bidders who submitted twenty (20) separate and unique projects.[22] The proposals submitted represented a diverse range of technologies (see Table 3 below) and contract structures, including Power Purchase Agreements, Build-Transfer agreement options, and self-build options. In addition, Bidders submitted a number of alternative proposals or proposal options which included different project sizes, in-service dates, solar and storage project structures, and contract terms.[23] Table 3 below lists the proposals by product type.

Table 3: Summary of the Proposals Received by Type of Project

Product/Technology	Number of Projects	Number of Alternative Proposals	PPA Options	BTA/Self-Build Options	Asset Purchase	Unique Total MWs[24]
Solar PV	9	13	9	2	2	1,220
Solar PV and Storage	15	41	35	4	2	1770/1770
Stand-Alone Storage	1	1	0	1	0	50
Wind	1	3	3	0	0	82
Transmission	1	1		1		
Total	**27**	**59**	**47**	**8**	4	

[22] The twenty unique and separate projects reflect the unique project only without consideration of whether a proposal includes the same project bid as a solar project as well as a solar plus storage project. Column 2 of Table 3 includes the number of separate projects such as a project bid as a solar only and solar plus storage resource within each resource category. For example, the DESRI Santa Teresa project was submitted as both a solar only as well as a solar plus storage project. Column 2 includes the same project in both categories, which explains the difference between the number of projects in Table 3, Column 2 (59) relative to the number of unique and separate projects (20) described in the paragraph above.

[23] All bidders for solar projects, with the exception of one bidder (with one solar project bid as a PPA and BTA), submitted both solar and solar plus storage options.

[24] The total Megawatts reported in this column reflect the unique capacity offered by each project. The values reported also reflect the largest option proposed for that unique project in MW. Because every proposal that offered a solar plus storage option whereby the nameplate of the solar component was twice the size of the storage component, all the projects reflected in this Column are solar plus storage projects in which the nameplate solar and storage capacity is the same.

In summary, there were fifty-nine alternative bids submitted. Total unique solar capacity was 1,220 MW while the total unique solar plus storage capacity offered was 1,770 MW each. Solar plus storage capacity represented the largest amount of nameplate capacity, and the largest number of proposals and projects submitted. There were 11 proposals submitted that offered solar capacity at twice the MW of nameplate capacity relative to the storage component. The remaining solar plus storage options were for solar and storage projects with the same solar and storage nameplate capacity.[25]

One of the surprising developments associated with the submission of proposals was that there was only one solar project that offered a 50 MW proposal option, even in light of the stated requirements by EPE for 150,000 MWh of renewable energy to meet RPS requirements.[26] The majority of proposals offered solar capacity (either as standalone or combined with storage) in excess of 100 MW of nameplate capacity. While the majority of proposals were PPA, there were also several project proposals that included both PPA and BTA options for the same project submitted.

Merrimack reviewed all proposals in the several days following the submittal date and developed a full summary of proposals and collaboratively developed a list of clarification questions for each of the bidders. Merrimack Energy and EPE compared the list of proposals submitted and agreed on the number of proposals and options submitted.

4.4.2 Review of Proposals and Follow-Up Questions to Bidders

EPE's objective was to evaluate proposals individually and in combination to identify the best proposal options to meet EPE's energy requirements for the 2023 Renewable Energy RFP for New Mexico. The first step following receipt of proposals was for the project team to review the proposals, determine if the proposals were conforming to or in compliance with the eligibility and threshold requirements[27] of the RFP, and that the bidders provided the appropriate bid fees and required documents.[28]

[25] There was an inconsistency between the Texas and New Mexico RFPs with regard to the size requirements associated with solar and storage capacity. For example, the Texas RFP requires that the battery storage component should be a 4-hour duration battery with a MW size that is 50% of the renewable energy resource's nameplate capacity (AC). The New Mexico RFP has a requirement that the battery storage and solar nameplate capacity should be equal. Since project developers submitted proposals that included both size consideration, EPE developed shortlists for each size option rather than rejecting proposals as non-conforming with the requirements listed in the RFP.

[26] A 50 MW solar project at a 35% capacity factor would generate approximately 150,000 MWhs in year 1.

[27] The Eligibility and Threshold requirements are listed in Table 1. As noted below, EPE eventually classified two proposals as non-conforming.

[28] EPE did determine that every proposal submitted an appropriate bid fee.

After reviewing proposals, EPE and the IE developed a list of clarification questions that were sent out to bidders to ensure the bidders provided a complete proposal and provided clarification of any information that was not clear. Several bidders provided additional bid documents, as requested, to ensure a complete and conforming proposal. The IE agreed with EPE's approach to maintain flexibility with regard to allowing bidders to comply with proposal requirements. During the review of proposals, the EPE team and the IE identified follow-up questions for a number of bidders to ensure the appropriate information was provided so that all bids could be effectively and fairly evaluated.[29]

During the conformance review period after receiving responses from the bidders, EPE determined that a few proposals were non-conforming. Four variants offered by one Bidder for solar and solar plus storage options were deemed to be non-conforming because the asset purchase option offered by the bidder was not clearly defined, and EPE did not wish to acquire an equity portion of a project not yet completed.[30] One other solar plus storage option, with unrealistic storage pricing, was classified as non-conforming.[31]

4.4.3 Evaluation of Proposals

During the conformance and evaluation period, EPE and Merrimack Energy held daily check-in calls to discuss the proposals, bidder responses to clarification questions, and evaluation progress. EPE's team worked quickly and diligently to get questions answered so that the evaluation inputs were accurate and complete. EPE initially conducted the LCOE calculations for the bids using the spreadsheet models previously identified. EPE sent a summary of the solar and solar plus storage PPA proposals, which also included preliminary LCOE results, to the IE for review on several occasions in January and February 2024. The files provided also included the evaluation model spreadsheets used to calculate the LCOE values for both the PPA and BTA options. For the BTA and self-build options, EPE provided copies of the Revenue Requirements models for those proposals offering a BTA option, self-build, or other resource options which EPE would own. Merrimack Energy reviewed the model runs and found some errors in the model

[29] Questions on issues such as appropriate pricing mechanisms, pricing components, generation profiles, degradation rates assumed, whether or not augmentation was included for storage options, assurance that BTA options included all relevant costs, and clarification of the Commercial Operation Date.
[30] The Bidder in question did have solar and solar plus storage options that were classified as conforming.
[31] For reporting of proposal status, Merrimack Energy starts with the total number of proposals submitted and then whittles down the number of proposals based on the classification of proposals as non-conforming, withdrawn proposals, proposals selected for the shortlist, and final proposals selected for contract negotiations.

runs.[32] The errors were reviewed with the EPE team for the New Mexico RFP and were corrected prior to completion of the shortlist selection for the New Mexico Renewable Energy RFP. The IE focused its review on the Revenue Requirements models to ensure consistent evaluation of BTA and self-build proposals.

While EPE was focused on completing the initial LCOE cost assessment as the basis for selecting a shortlist, EPE project team members were also involved in preparing the PLEXOS model[33] to undertake the portfolio evaluation that would incorporate the shortlisted proposals. EPE retained the services of Energy and Environmental Economics Inc. ("E3") to assist with the development and implementation of the PLEXOS model for evaluating portfolio options. E3 worked closely with the EPE project team throughout the process in preparing the inputs for the PLEXOS runs, reviewing the outputs, making necessary adjustments to the input information contained in the model, and testing for accurate and consistent results.

Merrimack Energy also attended several meetings with EPE and E3 to discuss the evaluation inputs and assumptions to be used in the portfolio analysis. However, Merrimack Energy was not involved in setting up and running the PLEXOS cases. E3 also reviewed the LCOE models and results, particularly the build-own-transfer proposals, in the shortlist development phase as well. As noted, Merrimack submitted a few questions to EPE during the model review phase that included topics around the input assumptions being used, BTA LCOE calculations (particularly hybrid options), the storage component model assumptions (O&M costs, augmentation, and degradation), PTC amounts included and ITC normalization calculations, if necessary.

In mid-January 2024, the EPE RFP team for the New Mexico RFP provided a list of eligible project proposals to the System Planning and Interconnection Department ("SPI") transmission team for review and assessment of the likelihood of the project to meet its proposed commercial operation date based on the project's location and interconnection status. The transmission analysis was designed to confirm the viability of a particular proposal to meet its projected COD date as well as assess the expected cost and timing for EPE to complete the facilities necessary to interconnect the project to the company's system as a project viability check. The EPE RFP team, IE and representative of the SPI team met on January 31, 2024 to discuss the initial results prepared by the SPI team. The

[32] For PPA options, Merrimack Energy found a few cases with inconsistencies that were corrected, including: (1) modeling of a few proposals which included a partial year for solar but a full year for storage costs based on the COD date proposed; (2) inconsistent property tax rates for BTA options; (3) use of consistent degradation rates for solar BTA options and (4) inconsistent treatment of PTC amounts for self-builds and BTA options. All errors were verified and corrected by EPE as part of its evaluation process.

[33] As IE for several large-scale All Source solicitations, Merrimack Energy is seeing the PLEXOS model being used for portfolio optimization by more and more utilities.

analysis was based on the SPI team's knowledge of the EPE transmission system, including transmission constraints in various locations within the system, and assessment of other studies undertaken on project interconnection in the EPE system to provide a high-level assessment of each project analyzed. The SPI representative classified the likelihood of each project's ability to connect to the EPE system in time to meet its proposed COD date based on a color-coding system with red or orange projects unlikely to meet their COD while dark green or light green projects would likely be able to meet their proposed COD. Projects classified as red or orange would generally require upgrades to the EPE system that could take a number of years to complete at a significant cost.[34]

While EPE intended to notify bidders of shortlist selection by January 26, 2024, as a result of the additional review and clarification of proposal information and adjustments made to the LCOE models as described in the previous section, EPE extended the timeline for notifying bidders into the New Mexico RFP of their project status. As noted in the RFP, shortlist selection would be based on selecting the best ranked proposals by category based on LCOE values combined with project viability reviews.

During the evaluation process, the EPE team and IE each identified potential shortlisted proposals for consideration and discussed shortlisted options. EPE and the IE agreed on selection of a robust shortlist prior to issuance of notification letters.

4.4.4 Shortlist Selection

For the 2023 Renewable Energy RFP for New Mexico, EPE considered projects based on categories of projects by technology type and transaction structure for shortlist consideration. EPE determined an initial shortlist that was comprised of fourteen (14) proposal options that included several technologies and transaction structures. Ten (10) unique projects were selected for the shortlist, with several projects included in multiple categories (e.g., included in both the solar and solar plus storage categories).

EPE sent out notifications to the bidders for the New Mexico RFP on February 9, 2024, for both selection to the shortlist and non-selection. The initial shortlist of projects selected by resource category is summarized in Table 4.

[34] SPI's initial assessment of the interconnection viability of projects submitted into the 2023 Renewable RFP for New Mexico classified three projects as green, including the Santa Teresa project, meaning these projects had a high probability of meeting their proposed COD date.

Table 4: Proposed Initial Shortlist

Resource Category	Number of Projects	Number of Options	Nameplate Capacity PPA MW	Nameplate Capacity BTA MW
Solar	4[35]	4	400	325[36]
Solar plus Storage	7	9	950/812.5	0
Wind	1	1	82	0

EPE noted in their selection notification letters to shortlisted bidders that this is "only an invitation for the projects listed to move to the next stage in the evaluation process". The letter also reminded shortlisted bidders that the "awarded resource that results from this next stage in the evaluation process is required to submit an interconnection request by March 29, 2024, to be included in EPE's 2024 Spring Study Cluster". Given the upcoming queue cluster study interconnection application deadline, EPE wanted to provide the initial selection notification letters with adequate time for bidders to submit their applications.

In late February, following shortlisting, EPE sent questions to each of the shortlisted bidders. One request was for bidders to complete a Curtailment Input Form to understand curtailment penalty information included in their proposals to be updated to the Teams website. A second request was for bidders to complete a questionnaire that included more detailed questions regarding the following information: (1) the bidder's expected and guaranteed COD dates; (2) a description of underlying assumptions as well as the timeline for the expected and guaranteed CODs; (3) an update to the project's interconnection status and progress made since submittal of the proposal on January 5, 2024; (4) a detailed schedule and plan for completing interconnection and network upgrade facilities in sufficient time to meet COD; (5) identification of whether the Bidder has hired an independent consultant to assess interconnection and network upgrade requirements and costs; (6) the lead times for major equipment and identifiers potential suppliers; (7) any updated hourly 8,760 generation profiles; (8) updates to IRA tax credits and progress made since proposal submittal; (9) confirmation of the duration of the BESS if applicable; (10) the number of cycles for the BESS; (11) a restatement of the life of the BESS; and (12) the life of the inverters and proposed replacement cost on a $/kW basis. Bidders provided reasonable responses to these questions.

[35] Two of the solar options were selected as a solar only proposal, while the other two also selected in the solar plus storage category.
[36] Of the four solar projects selected, two were PPAs and two were BTAs. All solar plus storage options selected were PPAs as was the wind project option.

On March 15, 2024, EPE notified shortlisted bidders for the 2023 Renewable RFP for New Mexico that it was delaying the date to make final bid selections. EPE noted that it would provide additional updates and notifications early the following week. EPE also sent Merrimack Energy a draft of the System Planning and Interconnection Department's ("SPI") Interconnection Assessment[37] for the ten unique projects.

On March 22, 2024, EPE sent a notice to shortlisted bidders that selections will occur no later than May 15, 2024. EPE encouraged bidders to submit applications into EPE's Spring 2024 interconnection queue cluster that would close on March 29, 2024. EPE extended its final selection deadline in order to allow for additional time to further evaluate proposals, particularly to better understand the interconnection and transmission constraints as determined by the SPI, in order to reduce the number of shortlisted proposals to facilitate PLEXOS modeling.

While Merrimack stated its preference to not reduce the shortlist without conducting further evaluation, Merrimack provided a potential path forward with the recommendation to conduct the transmission analysis on near term projects (i.e., projects with in-service dates between May 1, 2025 and May 1, 2027. This would include the New Mexico shortlist projects as well as Tranche 1 projects in the Texas RFP.[38] EPE could then conduct the transmission risk analysis on the second tranche of shortlisted proposals later when the staffing concerns for completing the transmission assessment would be alleviated. EPE determined that it would be best to follow this process and prioritize the analysis on Tranche 1 projects for Texas as well as the RPS requirements through the 2023 Renewable Energy RFP for New Mexico in order to determine their interconnection viability and risks in meeting the proposed CODs. After further discussion with Merrimack Energy, EPE followed Merrimack Energy's suggestion to develop a set of qualitative criteria to be applied uniformly and consistently across the remaining shortlisted proposals relating to transmission and interconnection risk that would be used by SPI in their analysis.

The SPI completed its analysis of all shortlisted projects for the 2023 Renewable Energy RFP for New Mexico and provided the analysis to the IE on April 17, 2024. The analysis included estimated timelines to complete the LGIA, POI substation upgrades, POI transmission upgrades, and the estimated timeline for the ten

[37] The analysis conducted by the SPI was designed to evaluate the viability of the CODs identified by each shortlisted bidder relative to the estimated time it could take to complete the necessary interconnection and network upgrade facilities in order to interconnect the project to the EPE system. It is Merrimack Energy's experience that this is a major issue in most power procurement processes to ensure selected projects can be completed and in service to meet the timing of utility requirements to meet reliability requirements.

[38] The first tranche for the 2023 All Source RFP for Texas was designed to fulfill a 300 MW capacity need in the 2025 – 2027 timeframe, with resources to be online and operational by May 1, 2025 but no later than May, 2027.

projects. SPI also color coded each proposal based on its assessment of the viability for each project regarding completion of facilities in time to meet COD expectations. Two projects were classified as green meaning they had a high probability of completing their projects on time. Five projects were classified as red, meaning they were not likely to complete the projects based on the proposed COD date. These projects were determined to either have an estimated COD date substantially beyond the bidder estimate and/or the cost to interconnect may be prohibitive. The remaining three projects were classified as yellow, meaning they have a chance to meet their COD timelines but with risk associated with completion.

Based on this analysis, there were two viable projects that could meet the timing requirements for the 2023 Renewable Energy RFP to be able to meet RPS requirements by May 1, 2025, but no later than May 1, 2027.

4.4.5 Portfolio Considerations

While the interconnection and transmission analysis was being conducted, EPE continued to prepare the PLEXOS model to evaluate portfolios of shortlisted proposals. As noted, the EPE project team was assisted by E3 personnel in developing the PLEXOS base case and alternative cases to test the portfolios along with a review and assessment of portfolio results. EPE kept Merrimack Energy informed regarding the status of the PLEXOS modeling.[39]

In addition, in considering options for meeting both the Tranche 1 requirements in Texas and the RPS requirements in New Mexico (150,000 MWh) by no later than May 1, 2027, it was obvious that there were few, if any, reasonable proposal options for meeting the requirements of the 2023 Renewable Energy RFP for New Mexico, based on the following.

- Even though it was explicitly identified in the 2023 Renewable Energy RFP for New Mexico, there were no reasonable proposals for RPS renewable projects that would provide the 150,000 MWhs of energy[40] requested by May 1, 2027.

[39] Based on a question from Merrimack Energy regarding the calculation of the Effective Load Carrying Capability (ELCC) values and use in the PLEXOS model, the EPE team informed the IE that PLEXOS did not determine the capacity contribution of the resources. The capacity contribution was determined from ELCC values which were inputs and were modeled in PLEXOS as constraints. The ELCC values were calculated by E3 using their RECAP model.

[40] The nameplate capacity of a solar project that would likely provide the 150,000 MWh of RPS energy sought would be approximately 50 MW. However, there were no competitive proposals that specifically offered a 50 MW solar only project. Instead, bidders generally proposed a larger solar project or a solar plus storage option that exceeded RPS requirements.

- While there was one proposal that offered 50 MW of solar, the proposal cost in $/MWh was more than double the average cost of the other 10 solar proposals.
- Based on proposal submissions combined with the transmission analysis conducted by EPE, there were only a few proposals that may reasonably meet the May 1, 2025 to May 1, 2027 required dates for projects to be in-service to meet EPE's RFP requirements.
- Most projects were not very mature projects and would be required to submit interconnection applications into EPE's 2024 Spring Cluster Study process in late March 2024, which could prove to be challenging to meet a May 1, 2027 on-line date.

The most viable project for New Mexico was the DESRI Santa Teresa project, which originally submitted three proposal options: 150 MW solar only, 150 MW solar plus 75 MW BESS, and 150 MW solar plus 150 MW BESS with an on-line date of March 31, 2026. After recognizing that only this one resource could meet the RPS needs for New Mexico by 2026, EPE, after discussions with DESRI about offering additional resource options, included five options[41] in the PLEXOS modeling and also decided to engage with DESRI to assess opportunities for sharing the Santa Teresa project between New Mexico and Texas requirements since the PLEXOS model did select the project for the EPE New Mexico system.

The next consideration was what options would be available to meet the New Mexico RPS RFP requirements. To meet the 150,000 MWh requirement, a solar only project of about 50 MW would be required. As noted, at this point only larger solar-only or solar plus storage projects were generally available, few of which had an even remote chance of meeting a May 1, 2027, date. EPE considered potential creative options to allocate 50 MW of solar from the DESRI Santa Teresa project to New Mexico to meet the RPS requirements in New Mexico of 150,000 between May 1, 2025, and May 1, 2027, at the lowest possible cost. As noted, EPE contacted DESRI in late April 2024 to inquire if a portion of the solar energy from the facility could be used for New Mexico. DESRI provided revised proposals for the Santa Teresa project for both New Mexico and Texas. The developer agreed to allocate 50 MW of solar from the project to New Mexico with the resulting 100 MW of solar and 150 MW of storage to Texas. In addition, the bidder proposed other combinations of solar and storage that could be considered and provided updated pricing for the options proposed. The result of these initiatives was a

[41] DESRI originally submitted three proposals into the New Mexico RFP, which included a solar option for 150 MW, a solar plus storage option with 150 MW of solar and 150 MW of storage, and a second solar plus storage option comprised of 150 MW of solar and 75 MW of storage. DESRI provided other project size and structure options after EPE engaged with DESRI to assess if DESRI was amendable to a split allocation of the project components, including a 50 MW solar option for New Mexico.

portfolio of resources that met the Nex Mexico RPS energy requirements and the majority of the Texas capacity requirements for Tranche 1. The PLEXOS model selected a standalone solar option of 50 MW to meet the New Mexico RFP requirements. The final price of the Santa Teresa solar offer was among the lowest cost options available based on the LCOE values and also offered the amount of energy required by EPE, without having to purchase much more solar energy or solar and storage than required given the sizes of the other competitive proposals.

4.4.6 PLEXOS Modeling

Given the overlap in solicitations with the 2023 Renewable Energy RFP for New Mexico with several proposals submitted into both solicitations, EPE discussed selecting the most viable projects that could meet the needs of both solicitations at the lowest cost. Additionally, resources on EPE's system can be used for New Mexico and Texas requirements simultaneously. EPE ran several iterations of the PLEXOS model to identify the most compelling and cost-effective portfolio of resources to meet both needs. Throughout May, EPE held meetings with Merrimack Energy to discuss the modeling results and selection options.

During the selection meeting on May 29, 2024, EPE presented to the IE that the PLEXOS modeling was choosing the 150MW solar/150MW storage Santa Teresa project along with a separate 100MW solar/100MW storage project for Texas needs as part of the Tranche 1 selections.[42]

4.4.7 Notifications to Bidders of Final Selection

On May 15, 2024, EPE notified DESRI that 50 MW from the Santa Teresa project with a COD of March 31, 2026, at a price of $28.95/MWh[43] had been selected to proceed with contract negotiation as part of the New Mexico RFP. EPE also issued a separate notification to DESRI that the Santa Teresa project was selected through the Texas RFP to provide 100 MW of solar and 150 MW of storage with a COD date of March 31, 2026.

In the notification letters to the selected bidder, EPE identified the selected proposal option and indicated that the notification letter is only an invitation from EPE to participate in contract negotiations and not a binding commitment to

[42] EPE selected the full DESRI Santa Teresa hybrid bid option of 150 MWac solar with 150 MW of storage. Of the 150 MW of solar, the energy associated with the 50 MW of solar would be allocated to New Mexico and 100 MW of solar would be allocated to Texas. The full battery capacity of 150 MW would be allocated to Texas.
[43] The ultimate price for the 50 MWac contract between EPE and DESRI for New Mexico was lower than the original bid price for 150 MW standalone solar and is very low relative to market prices for solar throughout the US.

contract. EPE also asked the bidders to confirm receipt of this notification and the bidder's willingness to proceed with contract negotiations.

5 CONCLUSIONS AND RECOMMENDATIONS

5.1 CONCLUSIONS

The RFP procedures followed by EPE and the subsequent bid evaluation and selection processes and methodologies are, in substance, consistent with industry standards. The information included in the RFP, the evaluation process and evaluation criteria, and requirements are also consistent with industry standards. The following summarize some of the major considerations relative to the consistency of the RFP with industry standards.

In the IE's view, the 2023 Renewable Energy RFP for New Mexico process was a fair, thorough, rigorous, and comprehensive evaluation and selection process, with every eligible bid scrutinized thoroughly based on threshold, quantitative, and qualitative criteria. The implementation of the solicitation process was effectively managed by EPE and should lead to economic benefits for New Mexico consumers. However, as described previously, the process did deviate from the established process in certain circumstances. Notably, the lack of viable proposals that would provide RPS energy at the level required by EPE for the 2023 Renewable Energy RFP for New Mexico created challenges for EPE to secure the amount of renewable energy required at the lowest reasonable cost. The challenges for securing required resources were also compounded by the limited number of proposals that could meet the required timeframe for meeting RPS compliance. The determination of in-service date viability was completed by EPE's transmission team. While conducting an analysis on interconnection viability is generally valuable, particularly with interconnection challenges being faced throughout the country, this part of the process was not contemplated in the original RFP design. However, the analysis provided valuable information for assessing the viability of proposals.

There were several factors that influenced the evaluation and selection process including the short timeframe for completing the evaluation of proposals and final selections to allow the final shortlisted proposals to submit an application for EPE's Spring 2024 cluster study process by March 29, 2024. Also complicating the process was the expected interconnection timelines to get projects online. This is an issue that has arisen in solicitations across the country with significant backlogs in interconnection queues and extended timelines to complete interconnection

facilities and network upgrades that are causing substantial delays for getting projects online under the schedule proposed by the project developer.

A list of important aspects and observations of the bid evaluation and selection process for New Mexico is provided below.

1. The 2023 Renewable Energy RFP for New Mexico resulted in a reasonably robust response from the market with a competitive number of proposals submitted and more MW of capacity and energy required. Proposals submitted included a range of renewable energy resources (i.e., solar, solar plus storage, wind, and standalone storage) and contract structures including PPAs, BTAs, self-build options, and asset acquisition. EPE received a total of fifty-nine (59) proposal options from twenty (20) unique projects (as described in Section 4.4.1 of this report) submitted by fourteen (14) bidders with a total of renewable energy and solar plus battery storage, which represents a significant amount of nameplate capacity proposed relative to the resource requirements requested.

2. The 2023 Renewable Energy RFP for New Mexico RFP documents were reasonably detailed and transparent documents that clearly identified the nature of the solicitation process and requirements, the products requested, the amount of RPS renewable energy required, eligible projects, characteristics of importance to EPE, the information required of the bidders, areas of the EPE transmission system that were constrained and those areas where available resources could be more accessible, and the context of the solicitation within the El Paso Electric system. These documents allowed bidders to effectively reflect the requirements outlined in the RFP and related documents in structuring their proposals.

3. While EPE clearly identified its requirements for up to 150,000 MWh of RPS eligible renewable energy per year beginning May 1, 2025, if achievable, but no later than May 1, 2027 to comply with the New Mexico Renewable Energy Act ("REA") requirements implemented through the New Mexico Public Regulation Commission ("NMPRC") Rule 17.9.572 ("Rule 572"), there was a limited market response for the renewable energy requirements stated in the RFP. While the requirements for 150,000 MWh of renewable energy would correlate to the generation of from a solar project in New Mexico of approximately 50 MWac, the vast majority of the proposals submitted either offered much more renewable energy than the amount required by EPE or offered combined solar with energy storage, or for one appropriately sized resource, exorbitant pricing.

4. One criterion the IE generally considers regarding the quality of the solicitation process is whether the procurement targets, products solicited, evaluation methodology and criteria, information required of bidders, and principles and objectives of the process are clearly defined in the bidding documents. EPE's RFP documents clearly defined the amount of renewable energy required, the timing for the requirements, the preferences of EPE, and the evaluation process and criteria. One area that was not addressed in the RFP that should be included in future RFPs is a brief description of the portfolio optimization process.

5. The outreach efforts and related activities implemented by EPE were broad reaching and were targeted to a large number of potential bidders based on past solicitations and bidder contacts. The outreach activities were designed to attract a wide range of bidders. The types of outreach activities initiated included marketing of the 2023 Renewable Energy RFP for New Mexico via direct contacts with known bidders, issuance of a press release associated with release of the RFP which resulted in coverage by industry trade publication regarding issuance of the RFP, bidder access to the EPE website for the RFP, the inclusion of a Bidders Webinar, and responses to bidder questions.

6. EPE implemented a multi-stage bid evaluation and selection process which included a conformance check for each proposal, threshold evaluation, economic evaluation, non-economic evaluation, shortlist selection based on the LCOE values for similar resources by resource category (solar only, wind only, and solar plus storage), portfolio optimization, and contract negotiations.

7. EPE responded to twenty-two (22) questions from prospective bidders during the solicitation process, including questions from the Pre-Bid Webcast meeting as well as other follow-up questions. In the general Q&A process, EPE responded to questions from bidders in an expedited manner and provided detailed responses to aid bidders in submitting their proposals.

8. Because of the uncertainty associated with the timing for completing network upgrades and interconnection facilities in time to meet the proposed online date for projects proposed, EPE's subject matter expert on transmission and interconnection assessments conducted an internal analysis to determine the expected date for completing the necessary facilities to interconnect projects to the EPE system based on knowledge of system constraints and other studies completed for similar areas on the EPE

system. The results of the analysis impacted the shortlist selection results, regarding the requirements for EPE to secure RPS energy prior to May 1, 2027 to meet RPS compliance requirements.

9. The initial shortlist selected by EPE was robust and contained multiple technology types and transaction types. EPE selected a shortlist of proposals that included solar, wind, and solar plus storage projects. However, the shortlist for New Mexico at this point did not contain any clear-cut options that would provide the RPS energy required at a reasonably competitive price.

10. As outlined in the RFP, EPE clearly indicated to bidders that it would use a single-stage pricing process to encourage bidders to submit their "best" prices in their proposals. In addition, EPE sought to complete the evaluation and notification process within a very short timeframe to allow proposals selected to apply for the Spring 2024 cluster study process by the end of March 2024; however, as described earlier in this report, the shortlist and final selection deadlines were pushed back due to an extended evaluation period. At the same time, EPE did actively communicate with bidders regarding the status of the evaluation and selection process and encouraged bidders to submit interconnection applications into EPE's Spring 2024 cluster study process.

11. Once the initial shortlist was narrowed down, EPE evaluated the proposals using the PLEXOS system optimization model which was designed to evaluate portfolios of resources that provide the capacity and energy requirements to meet system reliability objectives at the lowest reasonable cost. EPE retained E3 to assist in the development of the PLEXOS model inputs and evaluate the output files for the portfolios considered.

12. The PLEXOS model utilized by EPE is common in the utility industry worldwide for conducting portfolio optimization for system resources. Over the past few years, Merrimack Energy is aware of several utilities applying the PLEXOS model for evaluation and selection of proposals through an RFP process by considering the portfolio of resources that will provide the lowest resource cost for the utility system.

13. EPE took steps to ensure there were no inherent advantages afforded to the self-build options that were submitted by EPE's generation group into the 2023 Renewable Energy RFP for New Mexico. As noted, EPE retained an IE at the very beginning of the RFP development process to oversee the solicitation process and ensure the process was undertaken in a fair and

equitable manner for all bidders. The self-build options were submitted at the same time as other proposals. In addition, the self-build team followed the protocols identified in the 2023 Renewable Energy RFP for New Mexico for all bidders and provided the same information as required of other bidders. EPE informed the IE that a separate self-build team was established to prepare the self-build options and that no member of the self-build team would be involved in bid evaluation. Also, all files associated with the proposals received, evaluation results, and other information that needed to be shared among the members of the RFP evaluation team were stored in a document management system ("Microsoft Teams channel"), with restricted access only to select members of the 2023 All Source RFP evaluation team. In addition, EPE had a shared network drive accessible only by the Resource Planning Department.

14. All proposals submitted, besides the one transmission proposal and another asset purchase proposal, were deemed to be conforming regarding the requirements of the RFP for bidder eligibility.

15. The PLEXOS model selected one proposal option to essentially meet New Mexico RPS needs. EPE effectively negotiated with DESRI regarding the Santa Teresa project to allocate 50 MWac of solar only from a larger solar plus storage project and allocate the remaining energy and capacity to the EPE Texas system, which was seeking energy capacity and energy. This led to the lowest cost selection possible for New Mexico customers by not only selecting solar energy that conformed to New Mexico requirements without having to procure a larger solar project or a combined solar and storage project that may not all be needed for the New Mexico system. The pricing for the 50 MWac solar component was very competitive and represented a decrease from the original bid price for the project selected. In the IE's view, once all the final adjustments and updates were made to the PLEXOS model by E3, EPE's evaluation and selection process was generally consistent and selected the least cost portfolio of resources. Merrimack Energy's independent review of the quantitative and qualitative evaluation confirms that the proposals were consistently and fairly evaluated from both a quantitative and qualitative perspective.

5.2 RECOMMENDATIONS

1. EPE updated its proposal templates since the previous RFP. However, Merrimack Energy believes that the templates can be further enhanced by adding a description to the templates regarding the appropriate format for the data provided.

2. EPE has to be more realistic regarding the time required to complete the evaluation phase of a large-scale solicitation process. Due to the need to inform bidders of their status in the RFP process to allow the bidders to submit applications for the Spring 2024 Cluster Study interconnection process, the timeframe allotted for this RFP, particularly the evaluation period, was too short which affected the implementation of the process. EPE should allot several months for the analysis and evaluation of all proposals in order to complete the selection prior to any interconnection queue cluster process. Particularly with the NM RFP running simultaneously, there were time-intensive activities to complete in a short period of time. EPE should consider launching the RFP sooner to allow for a longer evaluation period.

3. EPE added the step in the process to undertake a more detailed review of the timeframe necessary to complete interconnection facilities and network upgrades to be able to connect a project to the EPE system as a means of determining if the project could meet its estimated online date. EPE did submit a series of questions to bidders to inquire about information they had gathered to support the online dates of their projects from an interconnection perspective. This part of the evaluation process, particularly if it impacts the selection process, should be fully defined and described prior to receipt of proposals. EPE may want to consider including this process as a part of future RFP processes if needed, including requesting additional information from bidders regarding their assessments of the impacts of completing interconnections in time to meet the online dates of the proposals submitted.

BEFORE THE NEW MEXICO PUBLIC REGULATION COMMISSION

APPLICATION FOR APPROVAL OF EL PASO ELECTRIC COMPANY'S RENEWABLE ENERGY ACT PLAN FOR 2026. AND NINTH REVISED RATE NO. 38 – RPS COST RIDER	)	**CASE NO. 25-00___-UT**
EL PASO ELECTRIC COMPANY, Applicant.	)	

DECLARATION OF WAYNE J. OLIVER IN SUPPORT OF THE FOREGOING DIRECT TESTIMONY TO EL PASO ELECTRIC COMPANY'S APPLICATION FOR APPROVAL OF ITS RENEWABLE ENERGY ACT PLAN FOR 2026, AND NINTH REVISED RATE NO. 38 – RPS COST RIDER

I ***Wayne J. Oliver***, pursuant to Rule 1-011 NMRA, state as follows:

1. I affirm in writing under penalty of perjury under the laws of the State of New Mexico that the following statements are true and correct.

2. I am over 18 years of age and have personal knowledge of the facts stated herein. I am employed by El Paso Electric Company ("EPE" or "the Company") as an *Independent Evaluator – Merrimack Energy Group, Inc.*

3. The foregoing Direct Testimony of Wayne J. Oliver, together with all exhibits sponsored therein and attached thereto, is true and accurate based on my knowledge and belief.

4. I submit this Declaration, based upon my personal knowledge and upon information and belief, in support of EPE's ***Application for Approval of Its Renewable Energy Act Plan for 2026, and Ninth Revised Rate No. 38 – RPS Cost Rider***.

FURTHER, DECLARANT SAYETH NAUGHT.

I declare under penalty of perjury that the foregoing is true and correct.

Executed on May 1, 2025.

/s/ Wayne J. Oliver

WAYNE J. OLIVER

BEFORE THE NEW MEXICO PUBLIC REGULATION COMMISSION

APPLICATION FOR APPROVAL OF	**)**	
EL PASO ELECTRIC COMPANY'S	**)**	
RENEWABLE ENERGY ACT PLAN FOR 2026,	**)**	
AND NINTH REVISED RATE NO. 38 – RPS	**)**	**CASE NO. 25-_____-UT**
COST RIDER	**)**	
	)	
EL PASO ELECTRIC COMPANY,	**)**	
Applicant.	**)**	
	)	

DIRECT TESTIMONY

OF

RENE F. GONZALEZ

MAY 1, 2025

EL PASO ELECTRIC COMPANY
DIRECT TESTIMONY OF
RENE F. GONZALEZ

TABLE OF CONTENTS

SUBJECT **PAGE**

I. INTRODUCTION AND QUALIFICATIONS 1

II. PURPOSE OF TESTIMONY 3

III. OVERVIEW OF EPE'S RPS COST RIDER.....3

IV. RPS COST RIDER FOR 2026 5

V. RECONCILIATION OF THE 2024 RPS COSTS AND RIDER REVENUES.....9

VI. CONCLUSION.....12

EXHIBITS

Exhibit RFG-1 - Rate Schedule No. 38 - Renewable Portfolio Standard (RPS) Cost Rider
Exhibit RFG-2 - Reconciliation of 2024 Renewable Portfolio Standard Costs and Revenues
Exhibit RFG-3 - Calculation of the 2026 RPS Cost Rider
Exhibit RFG-4 - Residential Bill Impacts

EL PASO ELECTRIC COMPANY
DIRECT TESTIMONY OF
RENE F. GONZALEZ

I. INTRODUCTION AND QUALIFICATIONS

Q1. PLEASE STATE YOUR NAME, BUSINESS ADDRESS AND OCCUPATION.

A. My name is Rene F. Gonzalez, and my business address is 100 N. Stanton Street, El Paso, Texas, 79901.

Q2. HOW ARE YOU EMPLOYED?

A. I am employed by El Paso Electric Company ("EPE" or the "Company") as Supervisor of Rates and Regulatory.

Q3. PLEASE SUMMARIZE YOUR EDUCATIONAL AND PROFESSIONAL QUALIFICATIONS.

A. I hold a bachelor's in business administration with a double major in Economics and Finance from The University of Texas at El Paso and a Master of Arts in Economics with a concentration in Public Utility Policy & Regulation from New Mexico State University ("NMSU"). After undergraduate studies, I joined ADP (Automatic Data Processing) as an Account Executive in the Insurance Services Division as a licensed Property and Casualty insurance agent specializing in the sale of Workers Compensation Insurance. I subsequently transferred within the same division to work as a Retention Specialist. In 2010, I obtained a position with the City of El Paso as a Procurement Analyst in the Purchasing Department.

I have worked with EPE in the Rate Research section of the Regulatory Affairs group since October 2012. I was first hired as an Associate Rate Analyst. In November 2014, I earned a progressive promotion to Staff Financial Analyst and in October of 2016 was promoted to Senior Rate Analyst. Finally, I was promoted to my current position as a supervisor of Rates and Regulatory, in September 2020.

In addition to my education and professional experience described above, I have attended professional development seminars covering rate design, marginal cost, load research statistical applications, and transmission and distribution systems.

Q4. PLEASE DESCRIBE YOUR CURRENT RESPONSIBILITIES WITH EPE.

A. As Supervisor in the Rates and Regulatory Affairs section, my responsibility is to supervise the preparation of economic, customer, statistical, and cost studies and analysis; to develop models and methodologies for cost of service, profitability, and pricing studies; and conducting annualization, jurisdictional and class cost of service studies, and revenue forecasts.

Q5. HAVE YOU PRESENTED TESTIMONY BEFORE UTILITY REGULATORY BODIES?

A. Yes, I have testified before the New Mexico Public Regulation Commission ("NMPRC" or "Commission") and previously filed testimony with the Public Utility Commission of Texas.

II. PURPOSE OF TESTIMONY

Q6. WHAT IS THE PURPOSE OF YOUR TESTIMONY?

A. The purpose of my testimony is to support EPE's Application for Approval of its Renewable Energy Act ("REA") Plan for Plan Year 2026 ("Plan" or "Plan for 2026") ("Plan Application"). In my testimony, I calculate and present EPE's proposed Renewable Portfolio Standard ("RPS") Cost Rider for recovery of EPE's Commission-approved RPS procurement costs in Plan Year 2026, including a proposed adjustment for reconciliation of actual 2024 RPS costs and rider revenue. I also present the estimated RPS Cost Rider for Next Plan Year (2027) for informational purposes.

Q7. ARE YOU SPONSORING ANY EXHIBITS IN THIS FILING?

A. Yes, I am sponsoring the exhibits listed in the Table of Contents.

III. OVERVIEW OF EPE'S RPS COST RIDER

Q8. DOES EPE CURRENTLY HAVE A COST RIDER FOR PURPOSES OF RECOVERING COSTS ASSOCIATED WITH THE RPS?

A. Yes. Rate No. 38 –RPS Cost Rider was originally approved by the Commission's Final Order in Case No. 17-00090-UT and implemented effective January 1, 2018. With each subsequent REA plan application, EPE has filed a revised RPS Cost Rider factor for NMPRC consideration and implemented a compliance RPS Cost

Rider in accordance with NMPRC orders.

Q9. DID EPE'S 2024 COST RIDER BEGIN ON JANUARY 1, 2024?

A. No. Due to the timing of the Commission's final order approving EPE's REA Plan for 2024 (issued Dec 21, 2023, in Commission Docket No. 23-00086-UT), EPE's 2023 Cost Rider remained in effect through February 1, 2024. The Commission Order directed EPE to "file an advice notice compliant with [the Commission's] Order, bearing an effective date of February 1, 2024." The Order also set forth a subsequent process for EPE to file a proposed revised advice notice reflecting the planned use of EPE's BV1 reallocation proposal (in place of Hecate) once EPE had notice that from the operator of the Hecate 1 project that Hecate would not meet the June 1, 2024, commercial operation date (COD). Pursuant to the final order requirements EPE filed Advice No. No. 294 with Seventh Revised Rate No. 38-RPS Cost Rider on January 10, 2024, to be effective February 1, 2024. However, that rate did not go into effect because less than two weeks later, on January 23, 2024, EPE filed a notice accompanied by an Amended Advice Notice No. 294 changing the Sevent Revised Rate No. 38, filed January 10, 2024 to reflect EPE's planned use of the BV1 reallocation option and changing the effective to February 2, 2024 (10 days after filing of the revised rate). The 2024 Rate took effect on February 2, 2024, and was in place for 11 months (Feb '24–Dec '24). Additional information is provided in response to Q22 below.

Q10. ARE ANY COMMISSION-APPROVED REA PLAN COSTS CURRENTLY RECOVERED THROUGH EPE'S BASE RATES?

A. Yes. In the Final Order in EPE's 2015 general rate case (Case No. 15-00127-UT), the Commission authorized recovery of $1.122 million of deferred stand-alone renewable energy certificates ("RECs"), WREGIS, and carrying costs through base rates annually for six years. The authorized level of continuing recovery of those deferred RECs through base rates, plus the addition of $800,000 (plus carrying charges) of REC costs associated with the 2015 Procurement Plan, Case No. 15-00117-UT, were modified by Final Order in EPE's 2020 rate case (Case No. 20-00104-UT) with the March 2021 balance being newly amortized over five years.

Q11. DOES EPE CONTINUE TO DEFER ANY APPROVED REA PLAN COSTS FOR RECOVERY IN BASE RATES?

A. No.

IV. RPS COST RIDER FOR 2026

Q12. IS EPE PROPOSING A REVISED RPS COST RIDER FOR THE 2026 PLAN YEAR IN THIS APPLICATION?

A. Yes, the Ninth Revised Rate No. 38 - RPS Cost Rider is included with my testimony as Exhibit RFG-1. EPE also filed Advice Notice No. 309 with the proposed revised rider rate to be effective for billing beginning January 2026.

Q13. WHAT ARE THE PROPOSED CHANGES TO THE RPS COST RIDER AND WHAT FACTORS CONTRIBUTE TO THOSE CHANGES?

A. EPE is proposing an increase of $0.020215 per kilowatt-hour ("kWh") (or 28.4%) over the Commission-approved RPS Cost Rider charge approved in EPE's last REA plan filing, Case No. 24-00176-UT, effective January 1, 2025. The proposed increase reflects the net effects of the following:

- Forecasted increases in New Mexico retail energy sales;
- The proposed reconciliation adjustment for over-recovered costs of approximately $554,720 for 2024 RPS costs and revenues; and
- EPE's proposed Santa Teresa Project.

Q14. DOES EPE'S PROPOSAL INCLUDE A 2024 PLAN YEAR RECONCILIATION AND IS THIS AMOUNT REFLECTED IN THE PROPOSED 2026 RPS COST RIDER?

A. Yes. In addition to estimated 2026 Plan Year procurement costs, EPE includes a proposed reconciliation amount of actual RPS-related costs and revenues for the

2024 Plan Year in the proposed 2026 RPS Cost Rider. The reconciliation also includes adjustments for the return of the 2022 over-collection and the under-returned CRLEF reconciliation amount previously embedded in the rider for 2024. The calculation of these reconciliation amounts is provided in Exhibit RFG-2 and addressed later in my testimony.

Q15. HOW DOES EPE CALCULATE ITS PROPOSED RPS COST RIDER?

A. EPE calculates the proposed rider by dividing the Plan Year Portfolio Procurement Cost by Net Forecasted New Mexico Jurisdictional kWh Sales in each plan year. The total procurement costs come from EPE witness Emmanuel Villalobos Exhibit EV-3 and is then adjusted for the over collection shown in Exhibit RFG-2. The resulting $/kWh rider will apply to all monthly retail energy sales. These costs and the 2026 RPS Cost Rider are based on EPE's plan discussed by EPE witness Villalobos. He addresses the Plan Year Portfolio /Procurement Cost and Net Forecasted New Mexico Jurisdictional kWh Sales.

Q16. WHAT ARE THE ELEMENTS CONTRIBUTING TO EPE'S PROPOSED 2026 RPS COST RIDER RATE?

A. The 2026 RPS Cost Rider is composed of Commission-approved RPS Procurement costs for Plan Year 2026 and a reconciliation of RPS costs and revenue for Plan Year 2024, which I discuss in the next section of my testimony. As presented in

Exhibit RFG-3, EPE proposes to incorporate and apply the over-collection of $554,720 from Plan Year 2024 to the RPS Plan Year 2026 Portfolio Procurement Cost of $43,956,901 as calculated by EPE witness Villalobos in his Exhibit EV-3. This results in a Net Plan Year 2026 Portfolio Procurement Cost of $43,402,181. As mentioned above, the reconciliation also includes an adjustment for the return of the over-collection previously embedded in the rider for 2024.

Q17. WHAT IS EPE'S PROPOSED 2026 RPS COST RIDER RATE?

A. Exhibit RFG-3 presents the calculation of the proposed 2026 RPS Cost Rider of $0.020215 per kWh. The proposed RPS Cost Rider rate of $0.020215 is reflected in the summary of requested approvals and revised Rate No. 38. The proposed 2026 RPS Cost Rider rate for applicable Retail customers reflects a 28.4 percent increase from the current RPS Cost Rider rate of $0.015742. If approved by the Commission, the calculated factor of $0.020215 per kWh will go into effect January 1, 2026.

Q18. HAS EPE CALCULATED RESIDENTIAL CUSTOMER BILL IMPACTS OF THE PROPOSED 2026 RPS COST RIDER?

A. Yes, Exhibit RFG-4 shows average monthly bill impacts, by season, of the change in the RPS Cost Rider for residential customers. The proposed 2026 RPS Cost Rider produces a net increase in the average monthly bill for a New Mexico

residential customer of $4.70 in the summer and $2.78 in the non-summer or a 3.96 percent increase and 5.12 percent increase, respectively.

Q19. WHAT RATE INFORMATION IS EPE PRESENTING IN THIS APPLICATION FOR THE NEXT PLAN YEAR (2027)?

A. EPE witness Villalobos presents RPS portfolio production and costs for the Next Plan Year for informational purposes. I calculate an illustrative RPS Cost Rider for 2027. This illustrative rate will be revised in EPE's next Plan filing to incorporate known changes to RPS Plan Year Procurement costs and adjusted for reconciliation of actual 2025 RPS revenues and costs.

Q20. WHAT IS EPE'S PROJECTED 2027 RPS COST RIDER?

A. Exhibit RFG-3 also provides the calculations of the projected 2027 RPS Cost Rider shown as $0.022354 per kWh in 2027. The 2027 rate is presented for illustrative purposes only and would be adjusted in EPE's next plan year filing for, among other things, reconciliation of actual 2025 plan year costs and revenues.

V. <u>RECONCILIATION OF THE 2024 RPS COSTS AND RIDER REVENUES</u>

Q21. PLEASE EXPLAIN THE RIDER THAT WAS IN PLACE IN 2024.

A. As partly addressed in Q9 above, there were two different riders in effect in 2024. The 2023 RPS cost rider, approved in Commission Docket No. 22-00093-UT,

remained in effect through January 2024. The 2024 RPS cost rider started on February 2, 2024. Their respective rider amounts were $0.008335 for January, and $0.008752 for February through December 2024.

Q22. PLEASE EXPLAIN EPE'S PROPOSED RECONCILIATION OF THE 2024 RPS COSTS AND RIDER REVENUES.

A. EPE compared actual 2024 procurement costs against actual 2024 revenues. My Exhibit RFG-2 outlines this reconciliation.

Q23. WHAT WERE THE ACTUAL 2024 RPS PROCUREMENT COSTS?

A. The actual 2024 RPS procurement costs totaled $16,139,132, broken down as follows:

- Actual costs for EPE's RPS resources approved by the Commission in Case No. 24-00176-UT are $16,136,972; and
- WREGIS fees incurred during 2024 in the amount of $2,160.

These actual procurement costs are consistent with the invoiced contract costs included with EPE's Revised 2024 Annual Renewable Energy Portfolio Report, filed on May 1, 2025, and attached as Exhibit JS-2 to the Direct Testimony of EPE witness James Schichtl.

Q24. PLEASE DESCRIBE THE ACTUAL 2024 REVENUES.

A. The actual revenues refer to the 2024 revenues of $15,851,379 billed to customers

under EPE's filed Rate No. 38. Pursuant to the Commission's Final Order in Case No. 23-00086-UT, EPE filed an Amended Advice Notice No. 294 to change the 7th revised Rate No. 38 filed January 10, 2024 to reflect the use of the approved Buena Vista 1 reallocation option. The Seventh revised Rate No. 38 went into effect February 2, 2024. The seventh revised Rate No. 38 was designed to recover the projected RPS procurement plan year costs for 2024, as well as to return the 2022 over-collected amount of $863,041.

After adjusting for the return of the over-collection, the 2024 RPS Cost Rider revenues that were specifically for the recovery of 2024 RPS procurement plan year costs equal $16,714,393, as shown in line 16 of Exhibit RFG-2.

Q25. WHAT ARE THE RESULTS OF THE RECONCILIATION OF ACTUAL COSTS AND ACTUAL REVENUES?

A. As shown in line 16 of Exhibit RFG-2, the reconciliation indicates that 2024 RPS Cost Rider revenue, over-collected actual cost by $554,720. This amount is attributable to the adjustment described above in the prior question and variances in final production amounts across each dedicated renewable generation resource included in the 2024 RPS Cost Rider.

Q26. WHY DOES EXHIBIT RFG-2 INCLUDE A COLUMN FOR CARRYING CHARGES?

A. Per the Commission's Final Order in Case No. 21-00111-UT, the balance of over-collection or under-collection of RPS costs will accrue carrying charges at the Customer Deposit Interest Rate set by the Commission. The 2024 Carrying Charge column in Exhibit RFG-2 provides the calculated carrying charge pursuant to the Commission's Order.

Q27. HOW DOES EPE PROPOSE TO TREAT THE 2024 RECONCILIATION AMOUNT?

A. EPE proposes to net the $554,720 of the 2024 reconciliation amount, which is the $575,261 over-collection plus $20,541 in accrued carrying charges discussed above, to forecasted 2026 Plan Year Procurement costs, which decreases the amount to be recovered from customers through EPE's proposed RPS Cost Rider rate for billing in 2026.

VI. CONCLUSION

Q28. HOW DOES EPE PROPOSE TO RECOVER THE RPS PROCUREMENT COSTS FOR THE 2026 RPS PLAN YEAR?

A. As approved by the Commission in its prior RPS filings, EPE proposes to continue to recover 2026 Plan Year Procurement Costs through the 2026 RPS Cost Rider. EPE proposes revising the existing rates in the RPS Cost Rider for billing in 2026, to recover its projected procurement costs and to include reconciliation of actual

2024 costs and revenue. The revised tariff is shown in Exhibit RFG-1 and included with an advice notice filed concurrent with this application and should be approved for billing beginning January 1, 2026.

Q29. DOES THIS CONCLUDE YOUR TESTIMONY?

A. Yes, it does.

EL PASO ELECTRIC COMPANY

9th REVISED RATE NO. 38 X
CANCELLING 8th REVISED RATE NO. 38 X

RENEWABLE PORTFOLIO STANDARD (RPS) COST RIDER

APPLICABILITY

This Rider is applicable to bills for electric service provided under all of EPE's retail rate schedules. This Rider is established to recover Renewable Portfolio Standard ("RPS") costs. This Rider is not applicable to customers exempt from charges for renewable energy procurements pursuant to NMSA 1978, Section 62-16-4(C).

TERRITORY

Areas served by the Company in Doña Ana, Sierra, Otero and Luna Counties.

MONTHLY RATES

	Rate
All Retail Rate Schedules, per kWh	$0.020215

X

RECONCILIATION FILING

This Rider shall be adjusted to reconcile a prior plan year's RPS Cost Rider revenues with actual RPS costs. Any over-recovery of the previously approved RPS costs will represent a credit to and reduction of the approved Rider in a subsequent plan year and any under-recovery of the previously approved renewable energy costs will represent a charge in addition to the approved Rider in a subsequent plan year.

Advice Notice No. **309**

Signature/Title */s/James Schichtl*
James Schichtl
Vice President – Customer and Regulatory Solutions

El Paso Electric Company
2026 Plan Filing
Reconciliation of 2024 Renewable Portfolio Standard Costs and Revenues

Line	2024	Hatch	NRG	Sun Edison EPE1	Sun Edison EPE2	Reallocation of Buena Vista Energy Center 1[3]	Buena Vista Energy Center 2	Distributed Generation	RPS Procurement Cost	WREGIS	Total REC Cost	RPS Cost Rider	(Over)/Under Recovery	2024 Carrying Charge[1]	Total 2024 (Over) / Under Recovery with Interest
1	January	$ 63,242.91	$ 344,349.61	$ 199,099.44	$ 196,357.75	$ -	$ 90,457.14	$ 13,232.84	$ 906,739.69	$ 12.63	$ 906,752.32	$ (1,128,597.25)	$ (221,844.93)	$ (726.54)	$ (222,571.47)
2	February	76,178.21	345,763.57	194,105.00	218,600.10	163,962.12	94,309.23	-	1,092,918.23	39.14	1,092,957.37	(1,107,324.16)	(14,366.79)	(775.97)	(15,142.76)
3	March	98,509.94	480,597.56	236,386.70	267,130.21	163,962.10	117,167.91	99.84	1,363,854.26	224.76	1,364,079.02	(1,010,292.07)	353,786.95	380.14	354,167.09
4	April	123,526.74	583,995.37	266,724.24	303,831.09	163,962.10	134,862.63	569.40	1,577,471.57	407.09	1,577,878.66	(1,001,531.78)	576,346.88	2,268.92	578,615.80
5	May	134,196.17	714,886.90	312,402.78	338,736.17	163,962.10	158,849.93	291.12	1,823,325.17	1,055.94	1,824,381.11	(1,159,884.99)	664,496.12	4,452.57	668,948.69
6	June	113,848.17	559,552.32	248,368.03	284,680.69	163,962.10	131,558.72	-	1,501,970.03	15.28	1,501,985.31	(1,493,310.28)	8,675.03	4,495.57	13,170.60
7	July	116,288.57	559,121.56	259,624.68	293,420.23	163,962.10	132,461.22	-	1,524,878.36	0.12	1,524,878.48	(1,811,279.85)	(286,401.37)	3,572.33	(282,829.04)
8	August	105,363.88	571,703.68	244,573.64	256,250.47	163,962.10	133,102.67	-	1,474,956.44	9.55	1,474,965.99	(1,821,223.83)	(346,257.84)	2,450.03	(343,807.81)
9	September	101,251.96	533,614.91	235,492.79	250,471.31	163,962.10	124,501.96	-	1,409,295.03	9.95	1,409,304.98	(1,776,146.62)	(366,841.64)	1,256.65	(365,584.99)
10	October	93,750.56	470,790.78	232,972.15	241,108.82	163,962.10	120,901.13	-	1,323,485.54	10.38	1,323,495.92	(1,372,536.32)	(49,040.40)	1,100.16	(47,940.24)
11	November	83,817.29	355,502.56	195,308.87	208,289.25	165,517.85	88,949.96	-	1,097,385.78	364.99	1,097,750.77	(1,110,788.47)	(13,037.70)	1,061.06	(11,976.64)
12	December	78,183.71	317,697.37	188,965.01	203,696.17	169,768.25	82,381.55	-	1,040,692.06	9.91	1,040,701.97	(1,058,463.08)	(17,761.11)	1,006.37	(16,754.74)
13	Total	$ 1,188,158.11	$ 5,837,576.19	$ 2,814,023.33	$ 3,062,572.26	$ 1,810,945.02	$ 1,409,504.05	$ 14,193.20	$ 16,136,972.16	$ 2,159.74	$ 16,139,131.90	$ (15,851,378.70)	$ 287,753.20	$ 20,541.28	$ 308,294.48
14											Variance>>	-1.8%			
15	2022 Over-Collection included in 2024 RPS Cost Rider.[2]											(863,014.18)	(863,014.18)		(863,014.18)
16	2024 Reconciliation Adjustment for 2026 RPS Cost Rider										$ 16,139,131.90	$ (16,714,392.88)	$ (575,260.98)	$ 20,541.28	$ (554,719.70)
											Variance>>	3.6%			

[1] Annual interest rate for 2024 of 3.93%.
[2] Adjustment reflects the 2022 reconciliation amount included in the January 23, 2024 compliance filing (Advice Notice No. 294) in Case No. 23-00086-UT.
[3] Costs associated with EPE's reallocation of BV1 energy and RECs .

El Paso Electric Company
2026 Plan Filing
Renewable Portfolio Standard Cost Rider

Line No.	(a) Description	(b) Reference	(c) 2026	(d) 2027
	Rate No. 1:			
1	Plan Year Portfolio Procurement Cost	Exhibit EV-3	$ 43,956,901	$ 56,291,811
2	2024 (Over)/Under Collection	Exhibit RFG-2	$ (554,720)	$ -
3	Net Plan Year Portfolio Procurement Cost		$ 43,402,181	$ 56,291,811
4	Net Forecasted New Mexico Jurisdictional kWh Sales	Exhibit EV-2	2,147,007,612	2,518,185,443
5	Renewable Portfolio Standard Cost Rider, per kWh		$ 0.020215	$ 0.022354

El Paso Electric Company
2026 Plan Filing
Residential Summer/Non-Summer Monthly Bill Impact

Line No.	(a) Description	(b) kWh **	(c) Current	(d) Proposed	(e) $ Change	(f) % Change
			Typical Residential Bill - Summer* (June - September)			
1	Customer Charge	-------	$ 7.00	$ 7.00	$ -	0.00%
2	Energy Charge - Summer - 1st Tier	600	$ 42.21	$ 42.21	$ -	0.00%
3	Energy Charge - Summer - All Remaining	418	$ 45.46	$ 45.46	$ -	0.00%
4	Subtotal - Non-Fuel Base Charges		$ 94.67	$ 94.67	$ -	0.00%
5	Fuel and Purchased Power Cost Adjustment - Secondary	1018	$ 0.32	$ 0.32	$ -	0.00%
6	Renewable Portfolio Standard Recovery	1018	$ 16.03	$ 20.58	$ 4.55	28.38%
7	Transportation Electrification Plan Recovery	1018	$ 0.96	$ 0.96	$ -	0.00%
8	Advanced Metering System Rider	1	$ 2.92	$ 2.92	$ -	0.00%
9	Efficient Use of Energy Recovery Factor	1018	$ 3.89	$ 4.04	$ 0.15	3.96%
10	Total Bill @ 780 kWh		$ 118.79	$ 123.49	$ 4.70	3.96%

		kWh **	Current	Proposed	$ Change	% Change
			Typical Residential Bill - Non-Summer* (October - May)			
11	Customer Charge	-------	$ 7.00	$ 7.00	$ -	0.00%
12	Energy Charge - Non-Summer	601	$ 34.95	$ 34.95	$ -	0.00%
13	Subtotal - Non-Fuel Base Charges		$ 41.95	$ 41.95	$ -	0.00%
14	Fuel and Purchased Power Cost Adjustment - Secondary	601	$ (2.36)	$ (2.36)	$ -	0.00%
15	Renewable Portfolio Standard Recovery	601	$ 9.46	$ 12.15	$ 2.69	28.44%
16	Transportation Electrification Plan Recovery	601	$ 0.57	$ 0.57	$ -	0.00%
17	Advanced Metering System Rider	1	$ 2.92	$ 2.92	$ -	0.00%
18	Efficient Use of Energy Recovery Factor	601	$ 1.78	$ 1.87	$ 0.09	5.12%
19	Total Bill @ 554 kWh		$ 54.32	$ 57.10	$ 2.78	5.12%

*Bill Impact excludes Franchise Fees and Taxes
**kWh are based on actual 2024 consumption averages

	Current	Proposed	
Customer Charge	$ 7.00	-	
Energy Charge ($kWh) Summer 0 - 600 kWh	$ 0.07035	-	
Energy Charge ($kWh) Summer All Other kWh	$ 0.10876	-	
Energy Charge ($kWh) Winter (All kWh)	$ 0.05816	-	
NM FPPCAC ($kWh) - (JUNE - 2024)	$ 0.000318	-	
NM FPPCAC ($kWh) - (JANUARY - 2025)	$ (0.003928)		
RPS Cost Rider	$ 0.015742	$ 0.020215	28.4%
Efficient Use of Energy Recovery Factor ("EUERF")	3.3844%	-	
Transportation Electrification Plan ("TEP")	$ 0.000944		
Advanced Metering System Rider ("AMS") per meter	$ 2.92		

BEFORE THE NEW MEXICO PUBLIC REGULATION COMMISSION

APPLICATION FOR APPROVAL OF EL PASO ELECTRIC COMPANY'S RENEWABLE ENERGY ACT PLAN FOR 2026, AND NINTH REVISED RATE NO. 38 – RPS COST RIDER	)	**CASE NO. 25-00___-UT**
EL PASO ELECTRIC COMPANY, Applicant.	)	

DECLARATION OF RENE F. GONZALEZ IN SUPPORT OF THE FOREGOING DIRECT TESTIMONY TO EL PASO ELECTRIC COMPANY'S APPICATION FOR APPROVAL OF ITS RENEWABLE ENERGY ACT PLAN FOR 2026, AND NINTH REVISED RATE NO. 38 – RPS COST RIDER

I, ***Rene F. Gonzalez***, pursuant to Rule 1-011 NMRA, state as follows:

1. I affirm in writing under penalty of perjury under the laws of the State of New Mexico that the following statements are true and correct.

2. I am over 18 years of age and have personal knowledge of the facts stated herein. I am employed by El Paso Electric Company ("EPE" or the "Company") as the *Supervisor of Rates and Regulatory*.

3. The foregoing Direct Testimony of Rene F. Gonzalez, together with all exhibits sponsored therein and attached thereto, is true and accurate based on my knowledge and belief.

4. I submit this Declaration, based upon my personal knowledge and upon information and belief, in support of EPE's ***Application for Approval of Its Renewable Energy Act Plan for 2026, and Ninth Revised Rate No. 38 – RPS Cost Rider.***

FURTHER, DECLARANT SAYETH NAUGHT.

I declare under penalty of perjury that the foregoing is true and correct.

Executed on May 1, 2025.

/s/ *Rene F. Gonzalez*

RENE F. GONZALEZ

BEFORE THE NEW MEXICO PUBLIC REGULATION COMMISSION

APPLICATION FOR APPROVAL OF EL PASO ELECTRIC COMPANY'S RENEWABLE ENERGY ACT PLAN FOR 2026, AND NINTH REVISED RATE NO. 38 – RPS COST RIDER	)	**CASE NO. 25-00____-UT**
EL PASO ELECTRIC COMPANY, Applicant.	)	

CERTIFICATE OF SERVICE

I HEREBY CERTIFY that on May 1, 2025 **El Paso Electric Company's Application for Approval of its Renewable Energy Act Plan for 2026 and Ninth Revised Rate No. 38 – RPS Cost Rider** was sent via U.S. Mail and emailed to each of the following:

Nancy B. Burns
El Paso Electric Company
300 Galisteo St., Suite 206
Santa Fe, NM 87501
nancy.burns@epelectric.com;
(email only)

Linda Pleasant, Case Manager
EPE Regional Case Management
El Paso Electric Company
100 North Stanton
El Paso, TX 79901
linda.pleasant@epelectric.com;
EPE_Reg_Mgmt@epelectric.com;
(email only)

Anastasia S. Stevens
Stevens Law LLC
29 Tano West
Santa Fe, NM 87506
astevens.law@gmail.com;

Adrienne Widmer
City of Las Cruces
P.O. Box 20000
Las Cruces, NM 88004-9002
awidmer@lascruces.gov;
(email only)

Joan E. Drake
Attorney for NMSU
Modrall Sperling
P.O. Box 2168
Albuquerque, NM 87103-2168
jdrake@modrall.com;

Kyle J. Smith, Esq.
U.S. Army Legal Services Agency
9275 Gunston Road
ATTN: Jals-RL/IP
Fort Belvoir, VA 22060-4446
kyle.j.smith124.civ@mail.mil;

Nann M. Winter, Esq.
Keith Herrmann, Esq.
Attorneys for Doña Ana County
Stelzner, Winter, Warburton, Flores, Sanchez & Dawes, P.A.
P.O. Box 528
Albuquerque, NM 87103
nwinter@stelznerlaw.com;
kherrmann@stelznerlaw.com;

Andrea Crane
Consultant for NMAG
The Columbia Group, Inc.
2805 East Oakland Park Blvd., #401
Ft. Lauderdale, FL 33006
ctcolumbia@aol.com;
(email only)

Gideon Elliot
Office of the Attorney General
P.O. Drawer 1508
Santa Fe, NM 87504-1508
gelliot@nmdoj.gov;
utilityfilings@nmdoj.gov;

Cydney Beadles
Western Resource Advocates
409 East Palace Ave. Unit #2
Santa Fe, NM 87501
cydney.beadles@westernresources.org;

Cara Lynch
Coalition for Clean Affordable Energy
3305 Lykes Dr. NE
Albuquerque, NM 87111
Lynch.Cara.NM@gmail.com;

Fred Kennon
Doña Ana County
Legal/Risk Management
845 N Motel Blvd
Las Cruces, NM 88007
fredk@donaanacounty.org;
(email only)

Rockney D. Bacchus
351 N 17th Street
Las Cruces, NM 88005
rockybacchus@gmail.com;

Merrie Lee Soules, *Pro Se*
3047 37th Ave. W.
Seattle, WA 98199
mlsoules@hotmail.com;

Allen H. Downs
5207 Ralls Rd
Las Cruces, NM 88012
biz@lifeisgood.com;
(email only)

Philip Simpson
1615 Candlelight Dr.
Las Cruces, NM 88011
philipbsimpson@comcast.net

John Bogatko
Ryan Friedman
NMPRC Legal Division
P.O. Box 1269
Santa Fe, NM 87504
john.bogatko@prc.nm.gov;
ryan.friedman@prc.nm.gov;
(email only)

Scott Cameron
NMPRC Office of General Counsel
P.O. Box 1269
Santa Fe, NM 87504
scott.cameron@prc.nm.gov;
elizabeth.ramirez@prc.nm.gov;
peggy.martinez-rael@prc.nm.gov
(email only)

DATED this 1st day of May 2025.

/s/ Kari E. Olson
Kari E. Olson